(12) INTERNATIONAL APPLICATION PUBLISHED UNDER THE PATENT COOPERATION TREATY (PCT)

(19) World Intellectual Property Organization
International Bureau

(43) International Publication Date
21 October 2010 (21.10.2010)

PCT

(10) International Publication Number
WO 2010/120776 A1

(51) International Patent Classification:
A61M 1/00 (2006.01) *A61F 13/02* (2006.01)

(21) International Application Number:
PCT/US2010/030888

(22) International Filing Date:
13 April 2010 (13.04.2010)

(25) Filing Language: English

(26) Publication Language: English

(30) Priority Data:
61/169,104 14 April 2009 (14.04.2009) US
12/758,607 12 April 2010 (12.04.2010) US

(71) Applicant *(for all designated States except US)*: **KCI LICENSING, INC.** [US/US]; Legal Department - Intellectual Property, P.O. Box 659508, San Antonio, TX 78265-9508 (US).

(72) Inventor; and

(75) Inventor/Applicant *(for US only)*: **RANDOLPH, Larry, Tab** [US/US]; 27917 Bonn Mountain Drive, San Antonio, TX 78260 (US).

(74) Agents: **HILTON, Robert, C.** et al.; Sonnenschein, Nath & Rosenthal LLP, P.O. Box 061080, Wacker Drive Station, Willis Tower, Chicago, IL 60606 (US).

(81) Designated States *(unless otherwise indicated, for every kind of national protection available)*: AE, AG, AL, AM, AO, AT, AU, AZ, BA, BB, BG, BH, BR, BW, BY, BZ, CA, CH, CL, CN, CO, CR, CU, CZ, DE, DK, DM, DO, DZ, EC, EE, EG, ES, FI, GB, GD, GE, GH, GM, GT, HN, HR, HU, ID, IL, IN, IS, JP, KE, KG, KM, KN, KP, KR, KZ, LA, LC, LK, LR, LS, LT, LU, LY, MA, MD, ME, MG, MK, MN, MW, MX, MY, MZ, NA, NG, NI, NO, NZ, OM, PE, PG, PH, PL, PT, RO, RS, RU, SC, SD, SE, SG, SK, SL, SM, ST, SV, SY, TH, TJ, TM, TN, TR, TT, TZ, UA, UG, US, UZ, VC, VN, ZA, ZM, ZW.

(84) Designated States *(unless otherwise indicated, for every kind of regional protection available)*: ARIPO (BW, GH, GM, KE, LR, LS, MW, MZ, NA, SD, SL, SZ, TZ, UG, ZM, ZW), Eurasian (AM, AZ, BY, KG, KZ, MD, RU, TJ, TM), European (AT, BE, BG, CH, CY, CZ, DE, DK, EE, ES, FI, FR, GB, GR, HR, HU, IE, IS, IT, LT, LU, LV, MC, MK, MT, NL, NO, PL, PT, RO, SE, SI, SK, SM, TR), OAPI (BF, BJ, CF, CG, CI, CM, GA, GN, GQ, GW, ML, MR, NE, SN, TD, TG).

Published:

— *with international search report (Art. 21(3))*

(54) Title: REDUCED-PRESSURE TREATMENT SYSTEMS AND METHODS EMPLOYING A VARIABLE COVER

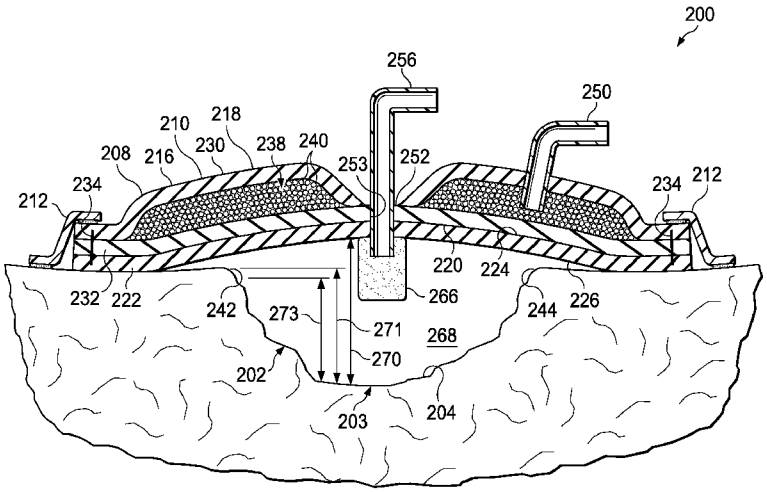

FIG. 2B

(57) Abstract: A system, dressing, and method for providing reduced pressure treatment to a tissue site on a wound bed of a patient includes a variable wound dressing having a variable cover (210) that is pliable at ambient pressure and less-pliable when placed under reduced pressure. The variable wound dressing has a first side (218) and a second, patient-facing side (220), and in use, a treatment space (268) is formed between the second, patient- facing side of the variable dressing and the wound bed. One or more ports (250, 256) are used to supply reduced pressure within the variable cover and to the wound site. A reduced-pressure subsystem is also included that is operable to supply reduced pressure to the one or more ports.

WO 2010/120776 A1