(12) INTERNATIONAL APPLICATION PUBLISHED UNDER THE PATENT COOPERATION TREATY (PCT)

(19) World Intellectual Property Organization
International Bureau

(43) International Publication Date
18 September 2025 (18.09.2025)

WIPO | PCT

(10) International Publication Number
WO 2025/193705 A1

(51) International Patent Classification:
*A47J 31/36* (2006.01)

(21) International Application Number:
PCT/US2025/019381

(22) International Filing Date:
11 March 2025 (11.03.2025)

(25) Filing Language: English

(26) Publication Language: English

(30) Priority Data:
63/564,222 12 March 2024 (12.03.2024) US

(71) Applicant: **KEURIG GREEN MOUNTAIN, INC.** [US/US]; 53 South Avenue, Burlington, MA 01803 (US).

(72) Inventors: **CASSANO, Robert, Dana**; 53 South Avenue, Burlington, MA 01803 (US). **DECATALDO, Charles, Anthony**; 53 South Avenue, Burlington, MA 01803 (US). **RALEIGH, Nicholas, John**; 53 South Avenue, Burlington, MA 01803 (US). **GREGORY, Janelle, Marie**; 53 South Avenue, Burlington, MA 01803 (US).

(74) Agent: **WANG, Jennifer, J.** et al.; Wolf Greenfield & Sacks, P.C., 600 Atlantic Avenue, Boston, MA 02210-2206 (US).

(81) Designated States *(unless otherwise indicated, for every kind of national protection available)*: AE, AG, AL, AM, AO, AT, AU, AZ, BA, BB, BG, BH, BN, BR, BW, BY, BZ, CA, CH, CL, CN, CO, CR, CU, CV, CZ, DE, DJ, DK, DM, DO, DZ, EC, EE, EG, ES, FI, GB, GD, GE, GH, GM, GT, HN, HR, HU, ID, IL, IN, IQ, IR, IS, IT, JM, JO, JP, KE, KG, KH, KN, KP, KR, KW, KZ, LA, LC, LK, LR, LS, LU, LY, MA, MD, MG, MK, MN, MU, MW, MX, MY, MZ, NA, NG, NI, NO, NZ, OM, PA, PE, PG, PH, PL, PT, QA, RO, RS, RU, RW, SA, SC, SD, SE, SG, SK, SL, ST, SV, SY, TH, TJ, TM, TN, TR, TT, TZ, UA, UG, US, UY, UZ, VC, VN, WS, ZA, ZM, ZW.

(84) Designated States *(unless otherwise indicated, for every kind of regional protection available)*: ARIPO (BW, CV, GH, GM, KE, LR, LS, MW, MZ, NA, RW, SC, SD, SL, ST, SZ, TZ, UG, ZM, ZW), Eurasian (AM, AZ, BY, KG, KZ, RU, TJ, TM), European (AL, AT, BE, BG, CH, CY, CZ, DE, DK, EE, ES, FI, FR, GB, GR, HR, HU, IE, IS, IT, LT,

(54) Title: BEVERAGE MACHINE

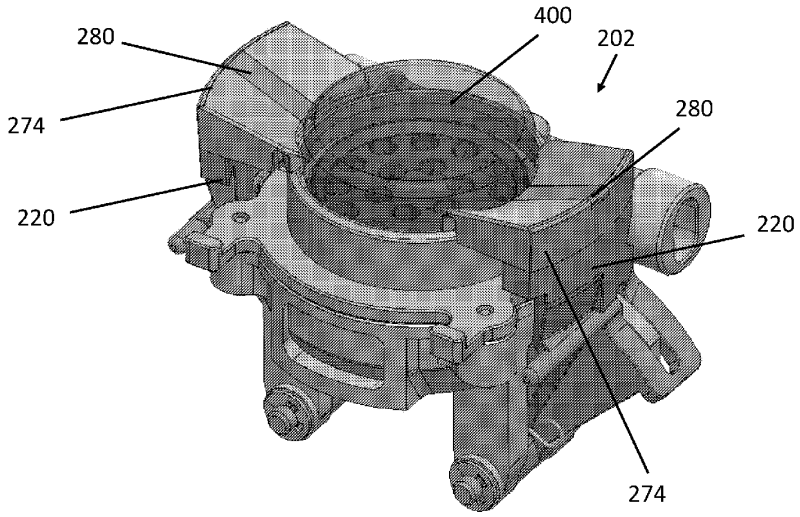


FIG. 10

(57) Abstract: A beverage machine is provided, where the beverage machine may, in some embodiments, be configured to have a brew chamber configured for receiving beverage tablets. The brew chamber may include a brew chamber section configured to move between a first position and a second position. The brew chamber may include gripper(s) configured to grip the beverage tablet as the brew chamber section moves to the second position, and release the beverage tablet after the brew chamber section moves to the second position.

WO 2025/193705 A1

*[Continued on next page]*

LU, LV, MC, ME, MK, MT, NL, NO, PL, PT, RO, RS, SE, SI, SK, SM, TR), OAPI (BF, BJ, CF, CG, CI, CM, GA, GN, GQ, GW, KM, ML, MR, NE, SN, TD, TG).

**Published:**

— *with international search report (Art. 21(3))*