FIG.1

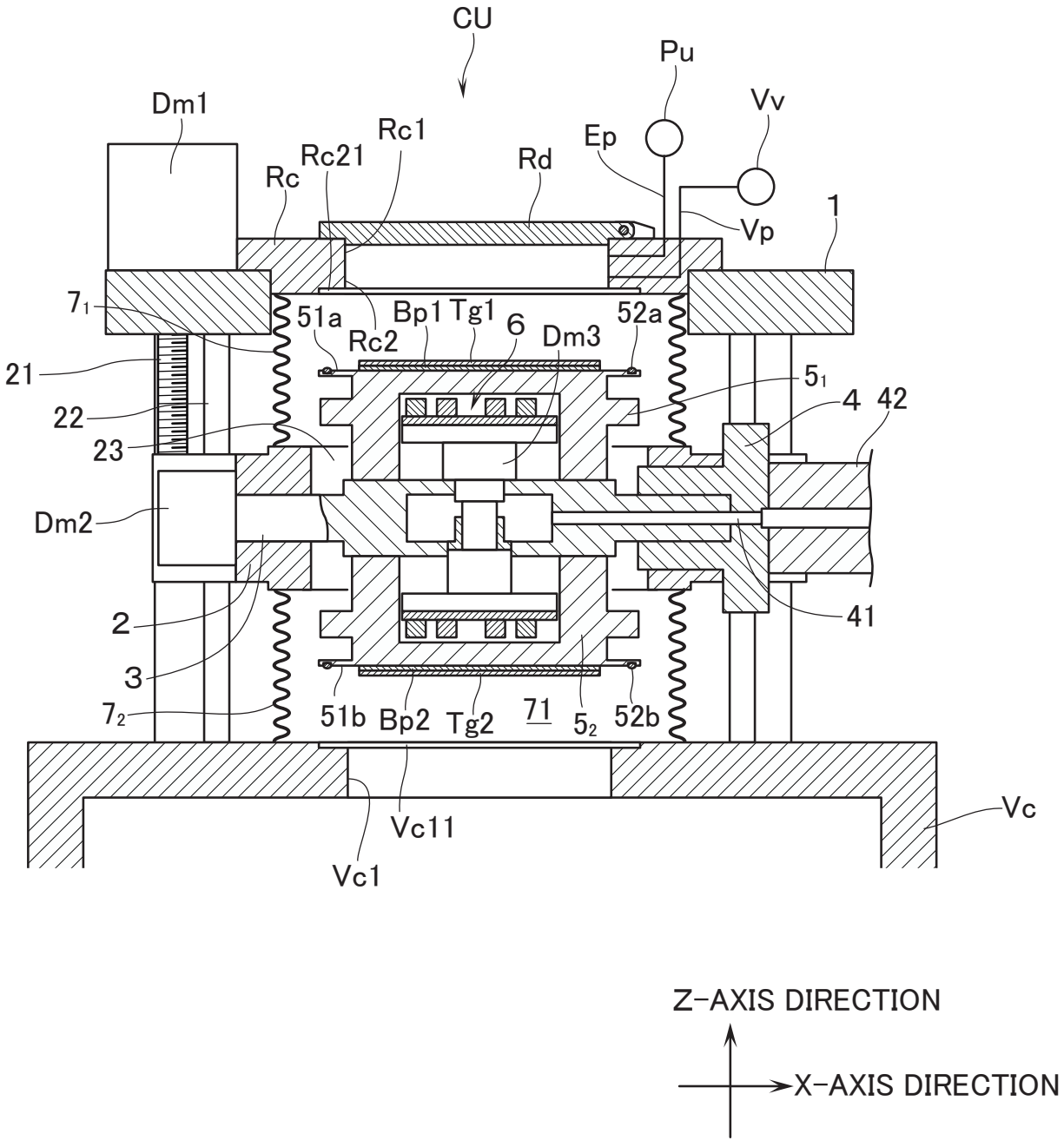
CU
Pu
Vv
Dm1
Rc1
Rc21
Rc
Rd
Ep
Vp
1
7₁
51a
Bp1
Tg1
6
Dm3
52a
Rc2
21
5₁
4
42
22
23
Dm2
2
41
3
7₂
51b
Bp2
Tg2
71
5₂
52b
Vc
Vc11
Vc1
Z-AXIS DIRECTION
X-AXIS DIRECTION

FIG.2

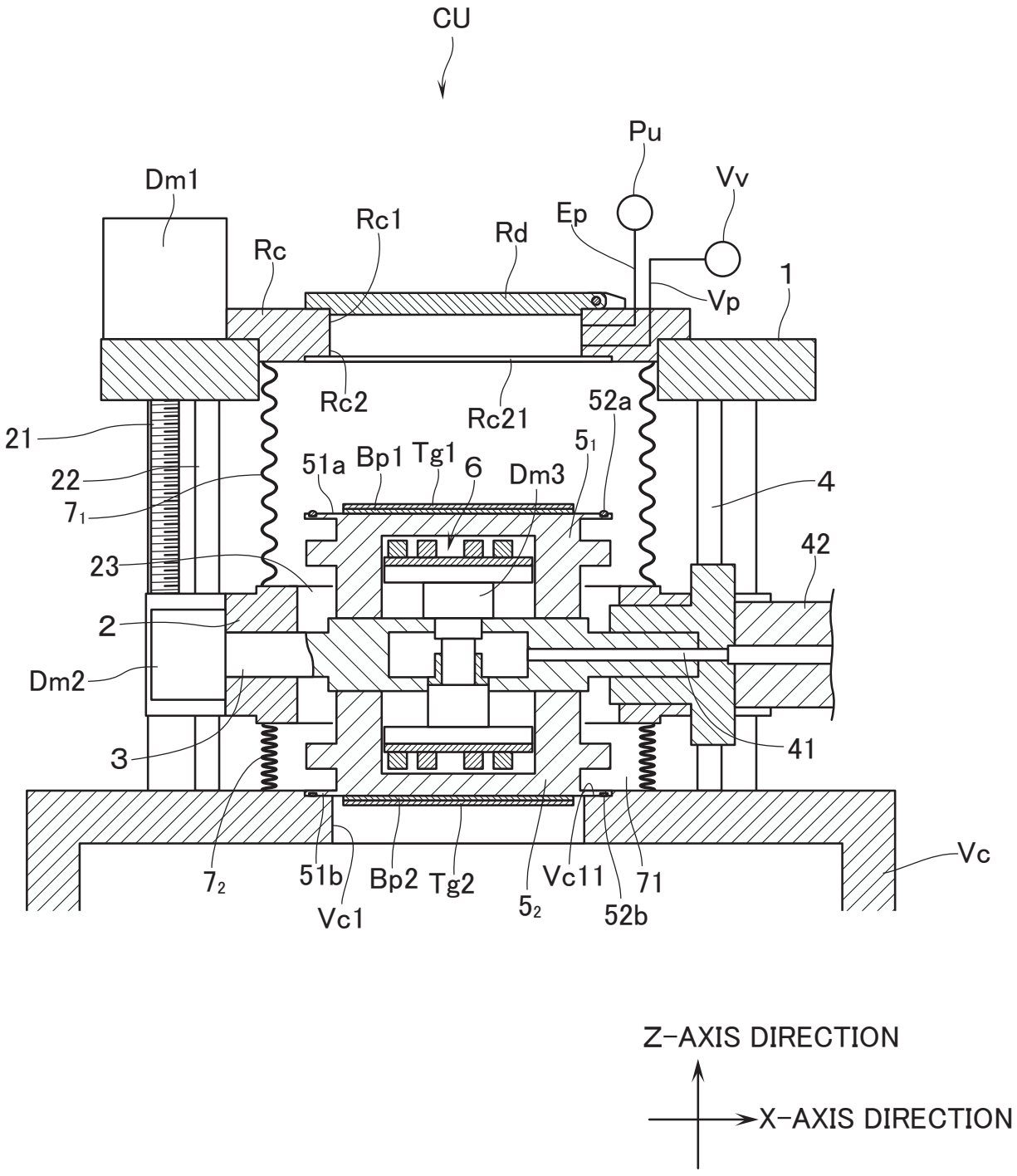
CU
Pu
Vv
Dm1
Rc1
Rd
Ep
Rc
Vp
1
Rc2
Rc21
52a
21
51a
Bp1
Tg1
6
Dm3
5_1
22
4
7_1
42
23
2
Dm2
41
3
7_2
51b
Bp2
Tg2
Vc11
71
Vc
Vc1
5_2
52b
Z-AXIS DIRECTION
X-AXIS DIRECTION

FIG.3

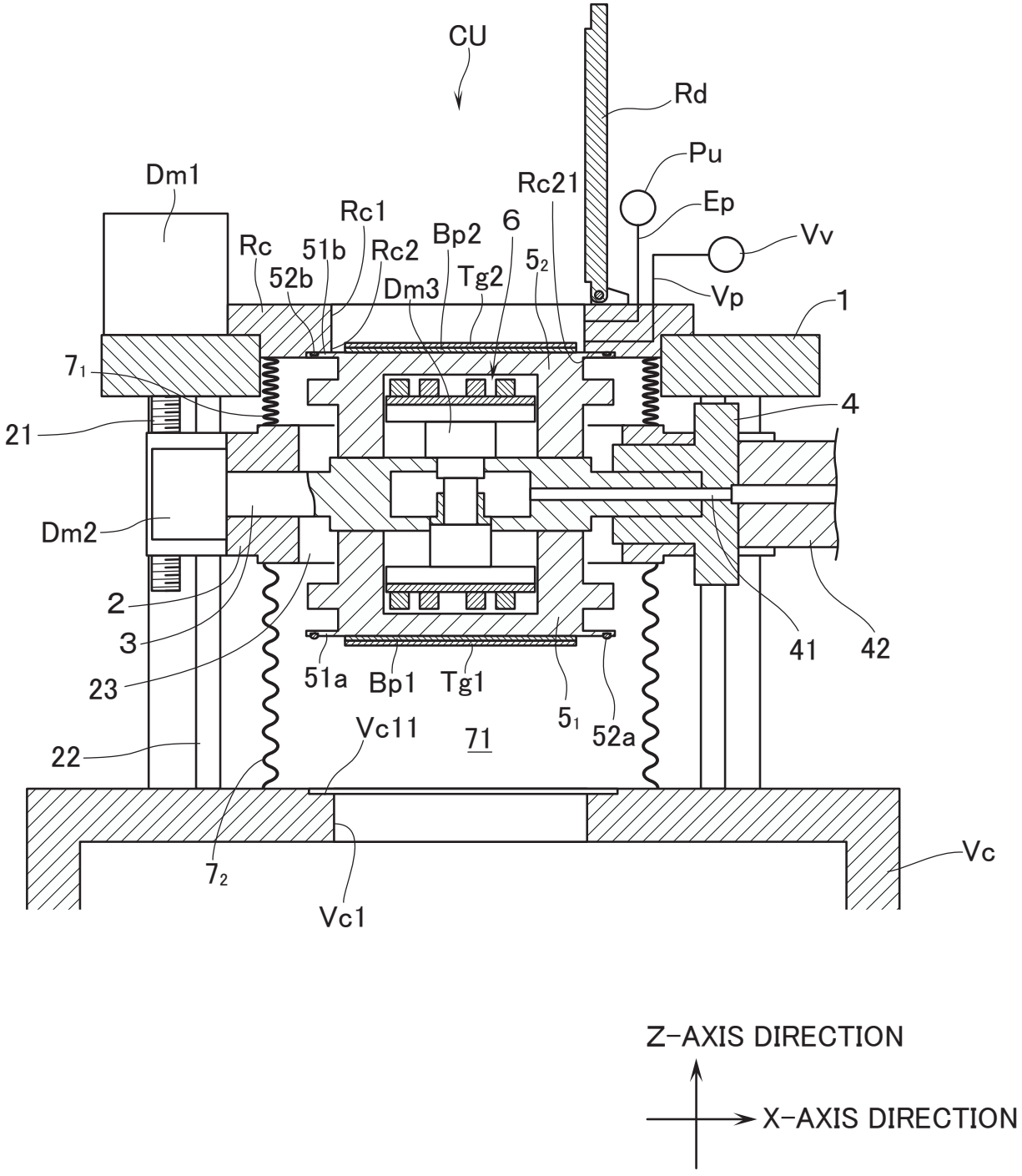
CU
Rd
Pu
Ep
Vv
Vp
Dm1
Rc21
Rc1
Rc
51b
Rc2
Bp2
6
52b
Dm3
Tg2
5₂
1
7₁
4
21
Dm2
2
3
23
22
51a
Bp1
Tg1
5₁
52a
Vc11
71
41
42
7₂
Vc1
Vc
Z-AXIS DIRECTION
X-AXIS DIRECTION