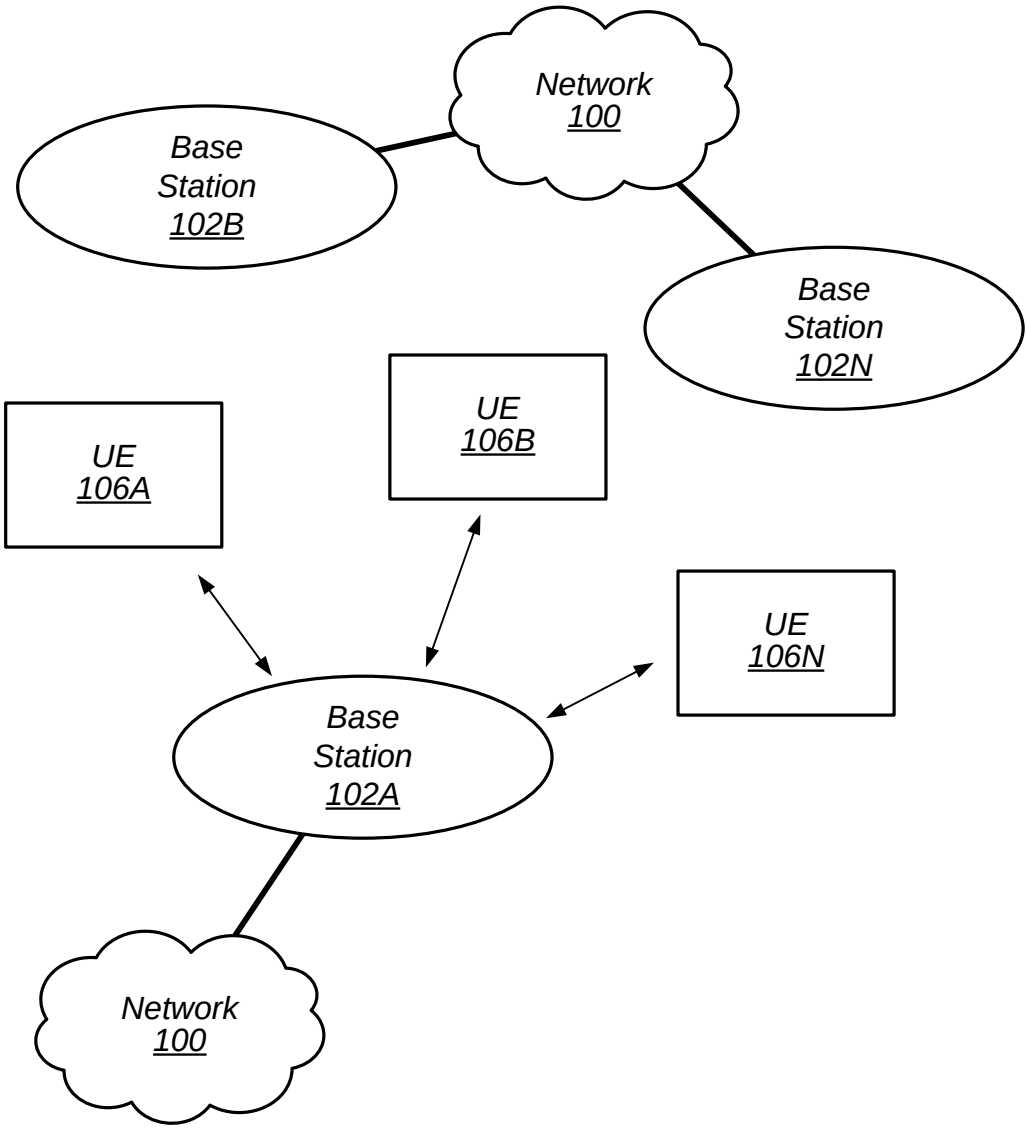
Network
100
Base
Station
102B
Base
Station
102N
UE
106A
UE
106B
UE
106N
Base
Station
102A
Network
100

FIG. 1A

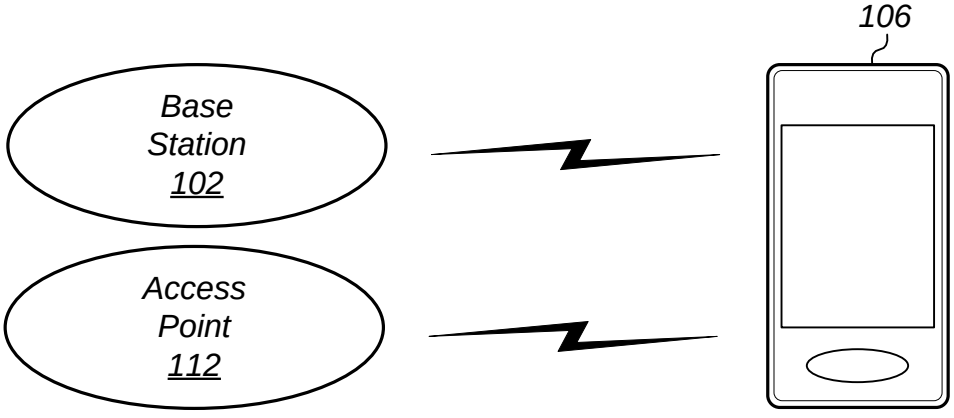
106
Base
Station
102
Access
Point
112

FIG. 1B

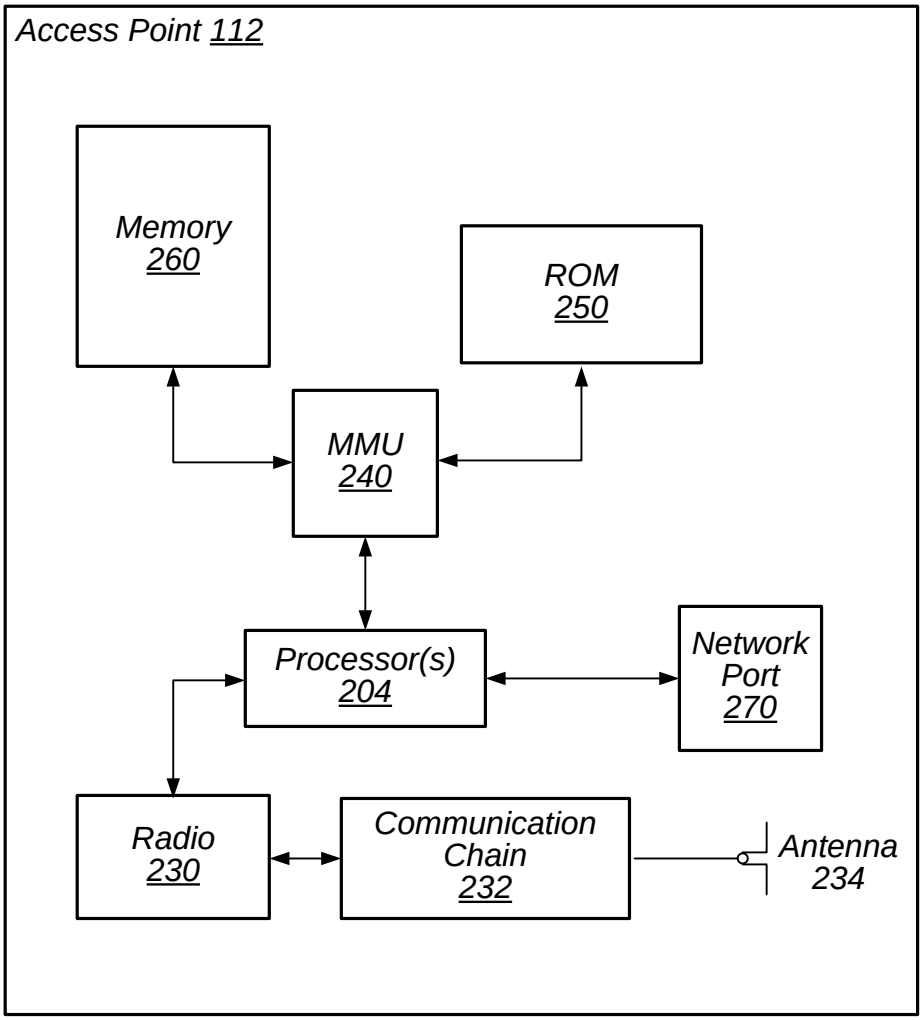
Access Point 112
Memory 260
ROM 250
MMU 240
Processor(s) 204
Network Port 270
Radio 230
Communication Chain 232
Antenna 234

FIG. 2

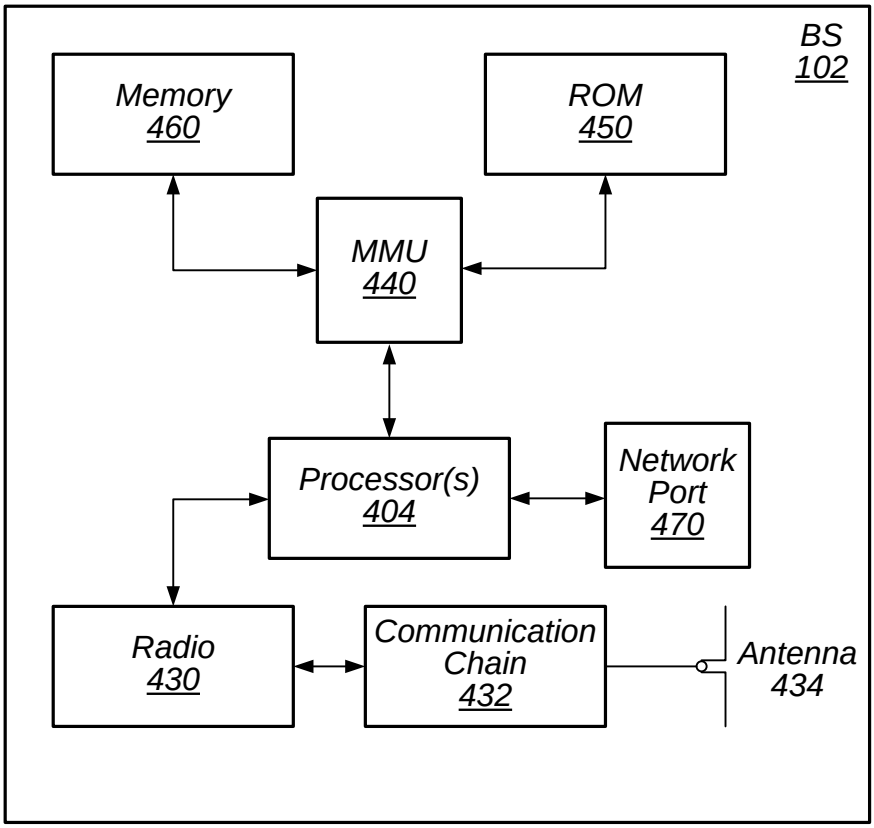
BS
102
Memory
460
ROM
450
MMU
440
Processor(s)
404
Network
Port
470
Radio
430
Communication
Chain
432
Antenna
434

FIG. 3

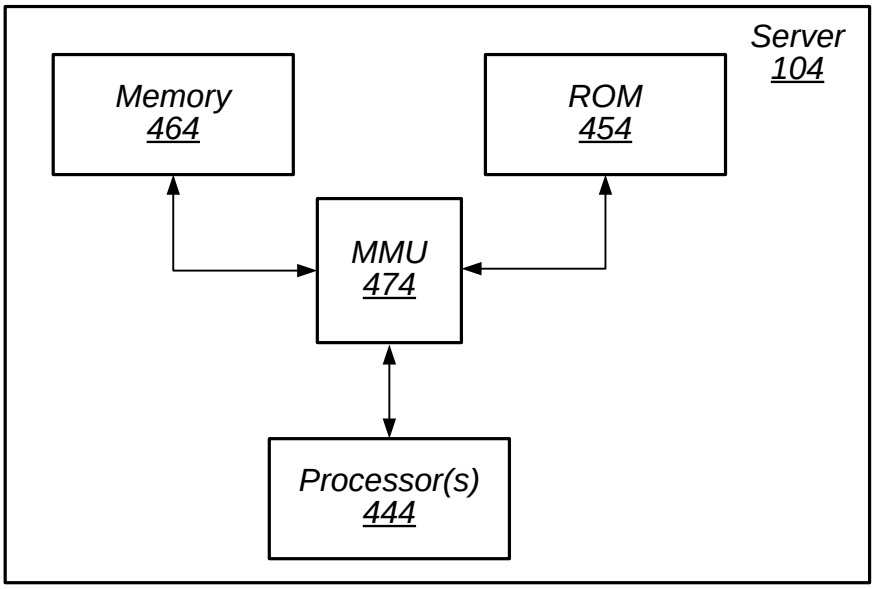
Server
104
Memory
464
ROM
454
MMU
474
Processor(s)
444

FIG. 4

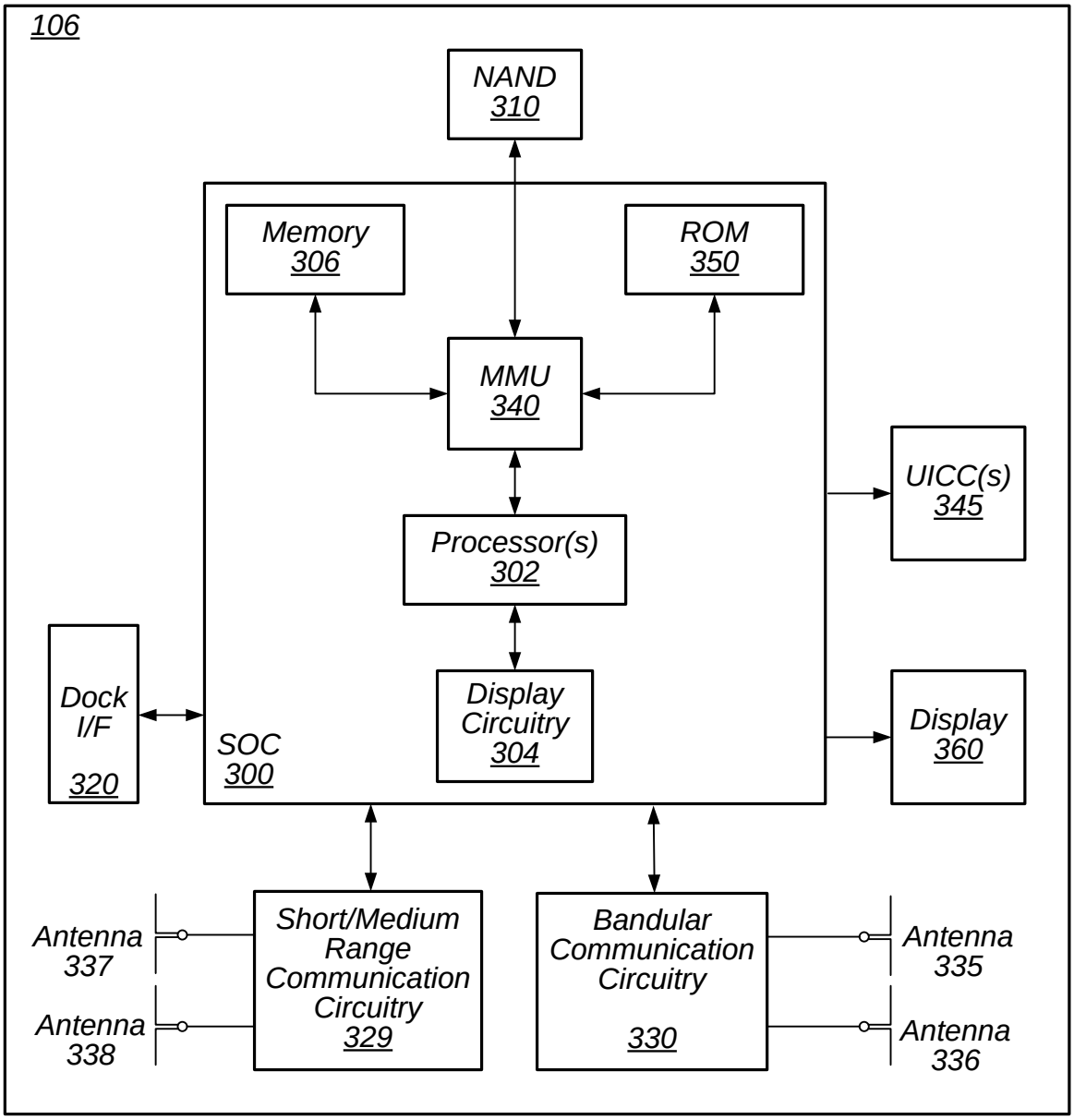
106
NAND
310
Memory
306
ROM
350
MMU
340
UICC(s)
345
Processor(s)
302
Dock
I/F
320
Display
Circuitry
304
Display
360
SOC
300
Antenna
337
Antenna
338
Short/Medium
Range
Communication
Circuitry
329
Bandular
Communication
Circuitry
330
Antenna
335
Antenna
336

FIG. 5A

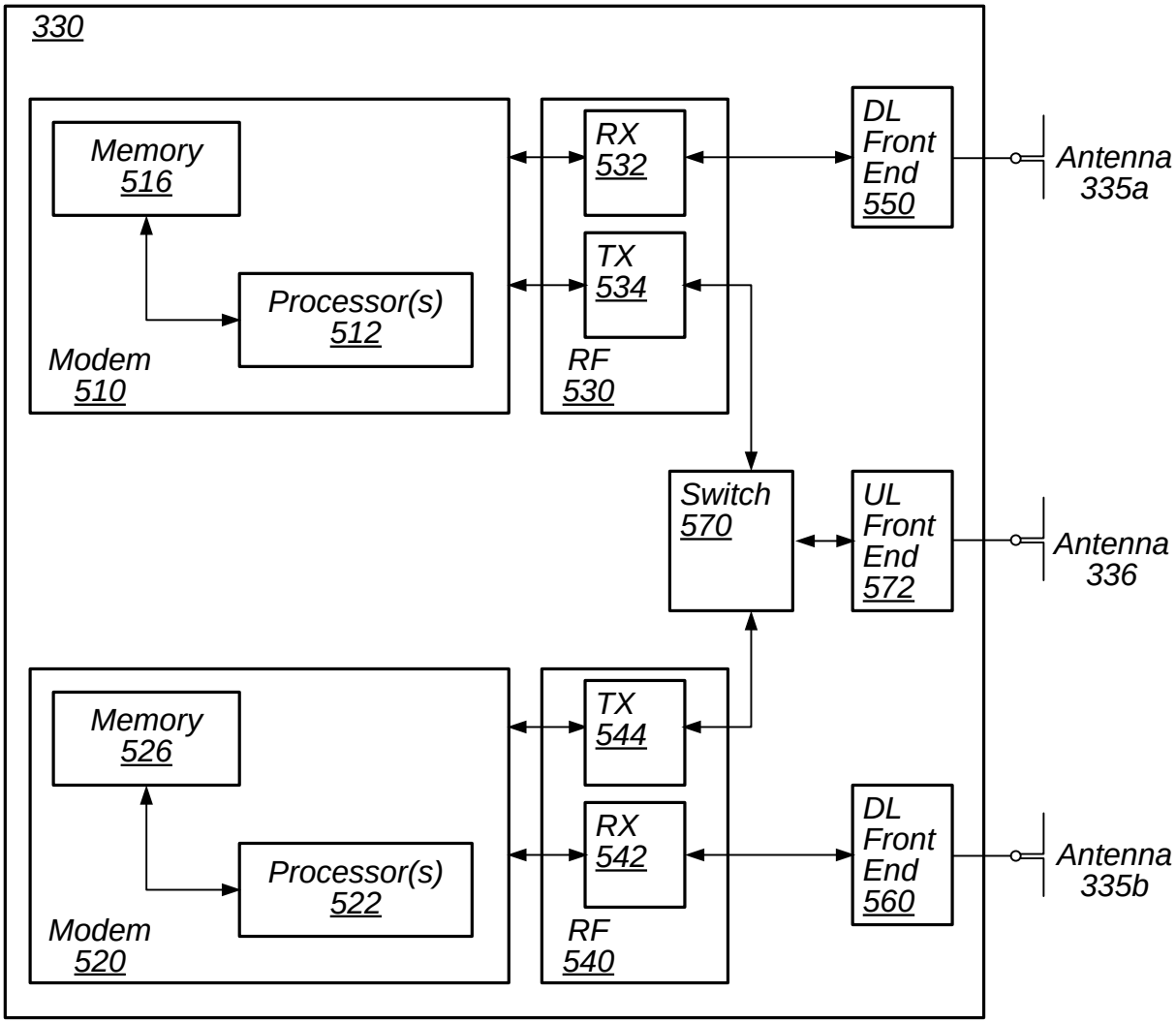
330
Memory
516
Processor(s)
512
Modem
510
RX
532
TX
534
RF
530
DL
Front
End
550
Antenna
335a
Switch
570
UL
Front
End
572
Antenna
336
Memory
526
Processor(s)
522
Modem
520
TX
544
RX
542
RF
540
DL
Front
End
560
Antenna
335b

FIG. 5B

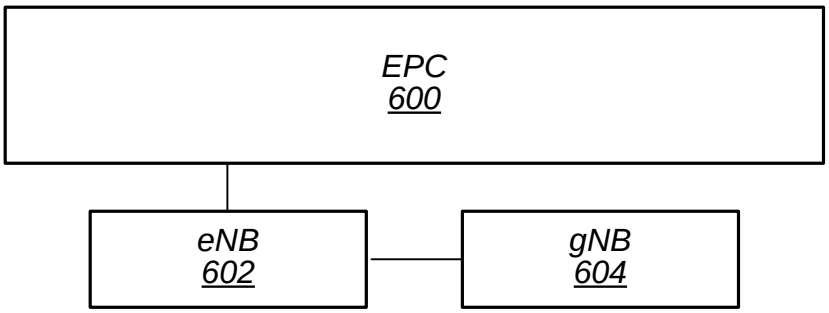
EPC
600
eNB
602
gNB
604

FIG. 6A

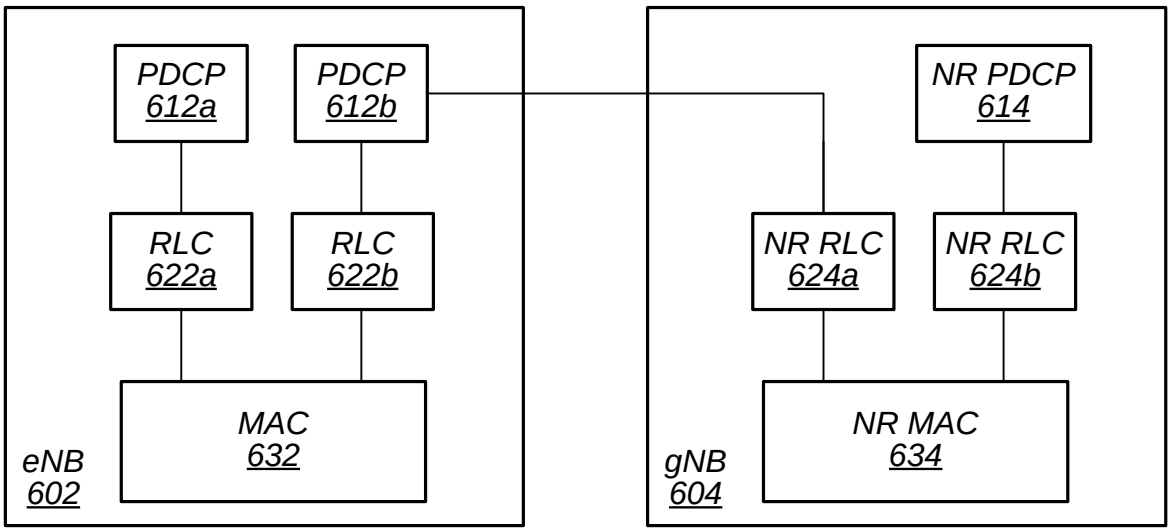
PDCP
612a
PDCP
612b
NR PDCP
614
RLC
622a
RLC
622b
NR RLC
624a
NR RLC
624b
MAC
632
NR MAC
634
eNB
602
gNB
604

FIG. 6B

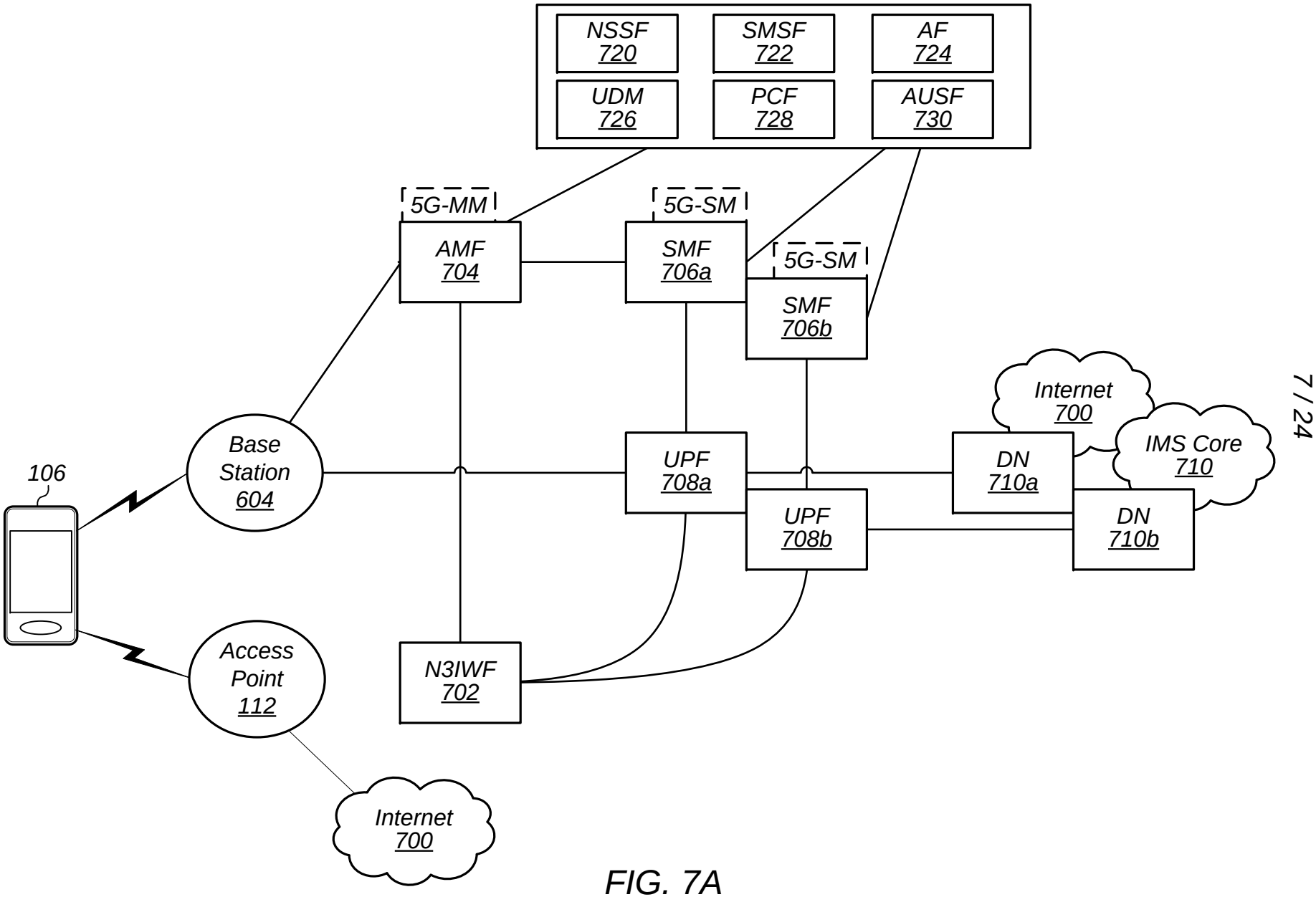
NSSF
720
SMSF
722
AF
724
UDM
726
PCF
728
AUSF
730
5G-MM
AMF
704
5G-SM
SMF
706a
5G-SM
SMF
706b
Internet
700
IMS Core
710
106
Base
Station
604
UPF
708a
DN
710a
UPF
708b
DN
710b
Access
Point
112
N3IWF
702
Internet
700

FIG. 7A

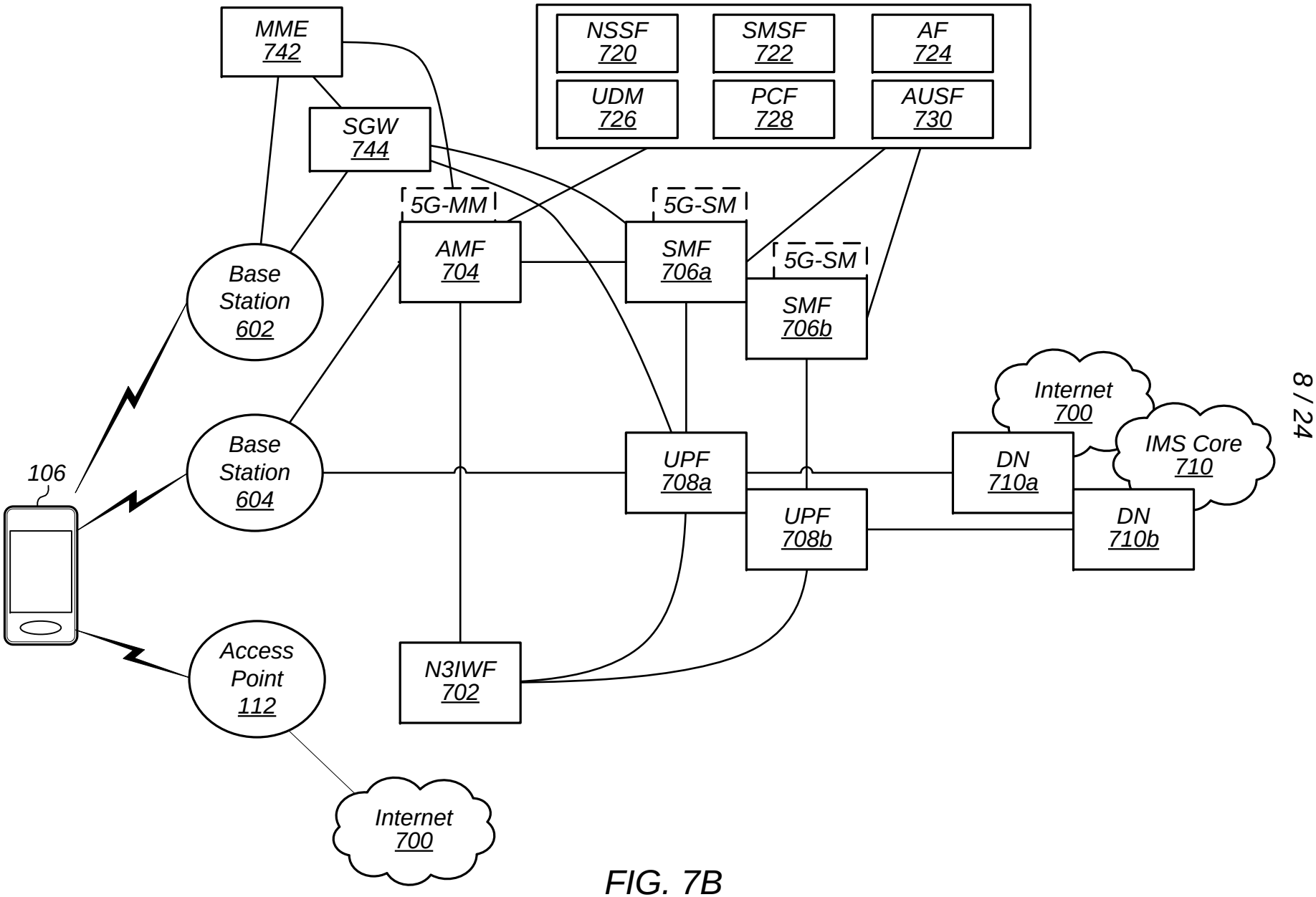
MME
742
NSSF
720
SMSF
722
AF
724
UDM
726
PCF
728
AUSF
730
SGW
744
5G-MM
5G-SM
AMF
704
SMF
706a
5G-SM
SMF
706b
Base
Station
602
Base
Station
604
106
Access
Point
112
N3IWF
702
UPF
708a
UPF
708b
Internet
700
DN
710a
IMS Core
710
DN
710b
Internet
700

FIG. 7B

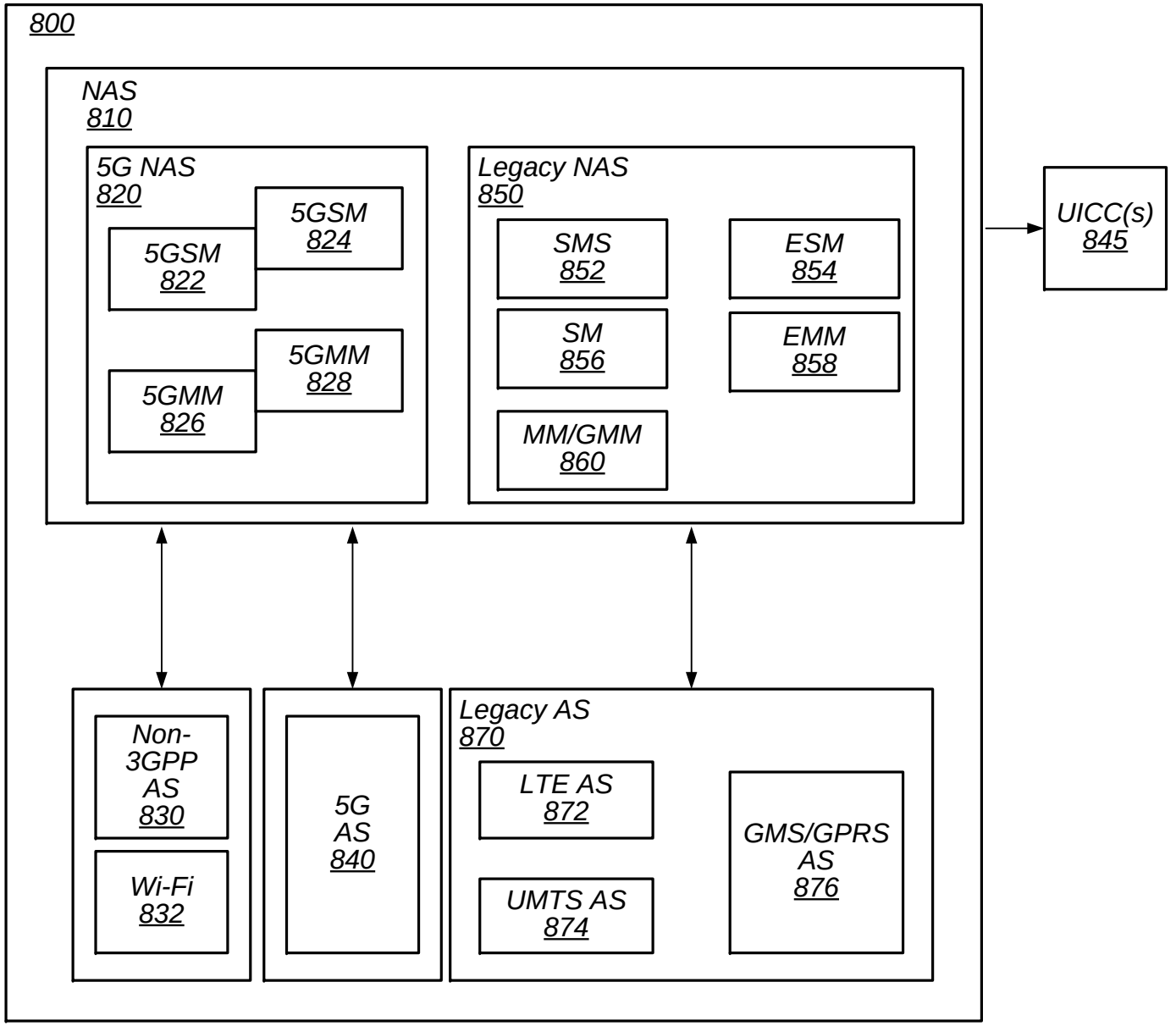
800
NAS
810
5G NAS
820
5GSM
822
5GSM
824
5GMM
826
5GMM
828
Legacy NAS
850
SMS
852
ESM
854
SM
856
EMM
858
MM/GMM
860
UICC(s)
845
Non-
3GPP
AS
830
Wi-Fi
832
5G
AS
840
Legacy AS
870
LTE AS
872
UMTS AS
874
GMS/GPRS
AS
876

FIG. 8

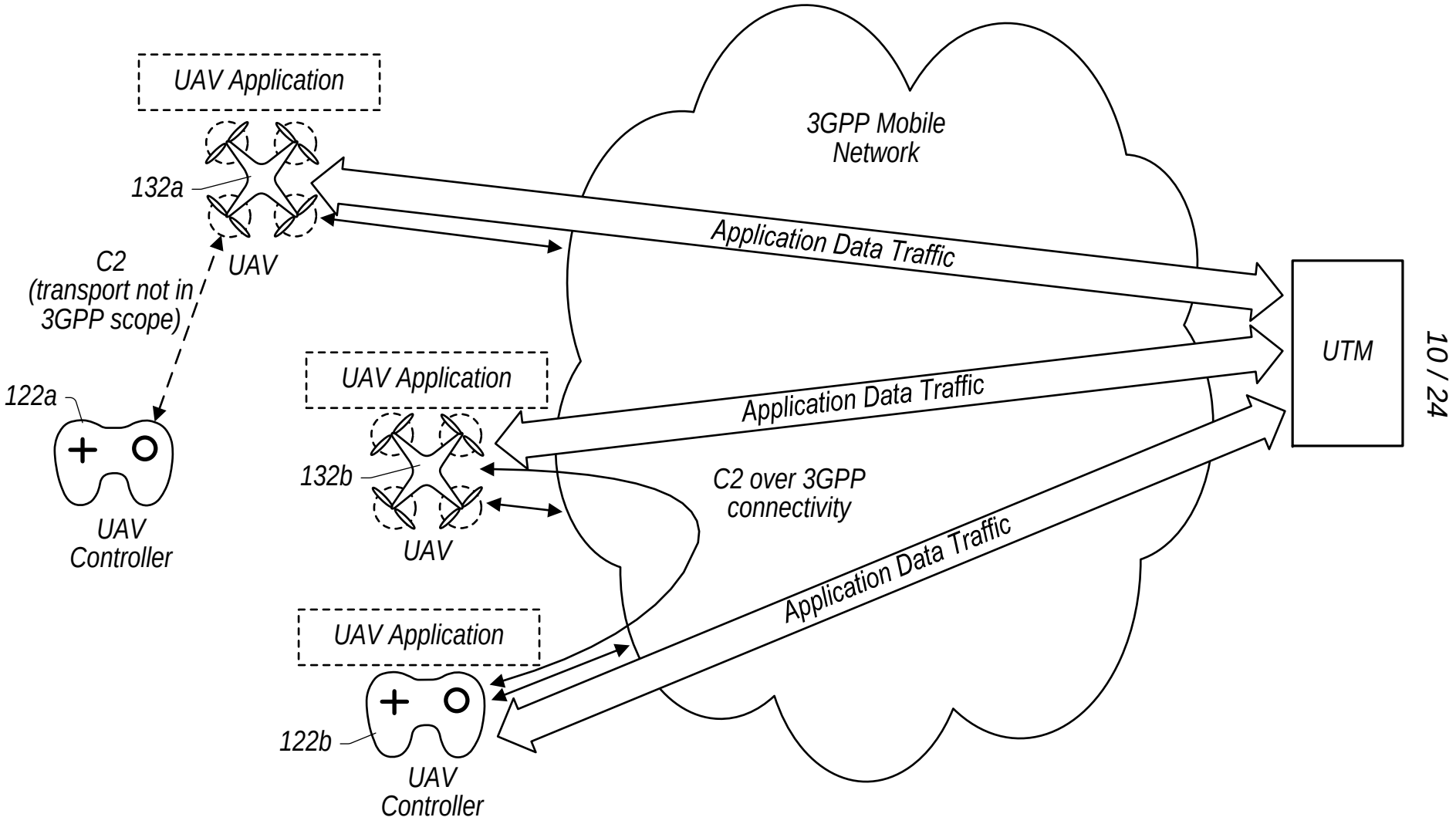
UAV Application
132a
UAV
C2
(transport not in
3GPP scope)
122a
UAV
Controller
3GPP Mobile
Network
Application Data Traffic
UAV Application
132b
UAV
C2 over 3GPP
connectivity
Application Data Traffic
UAV Application
122b
UAV
Controller
Application Data Traffic
UTM

FIG. 9

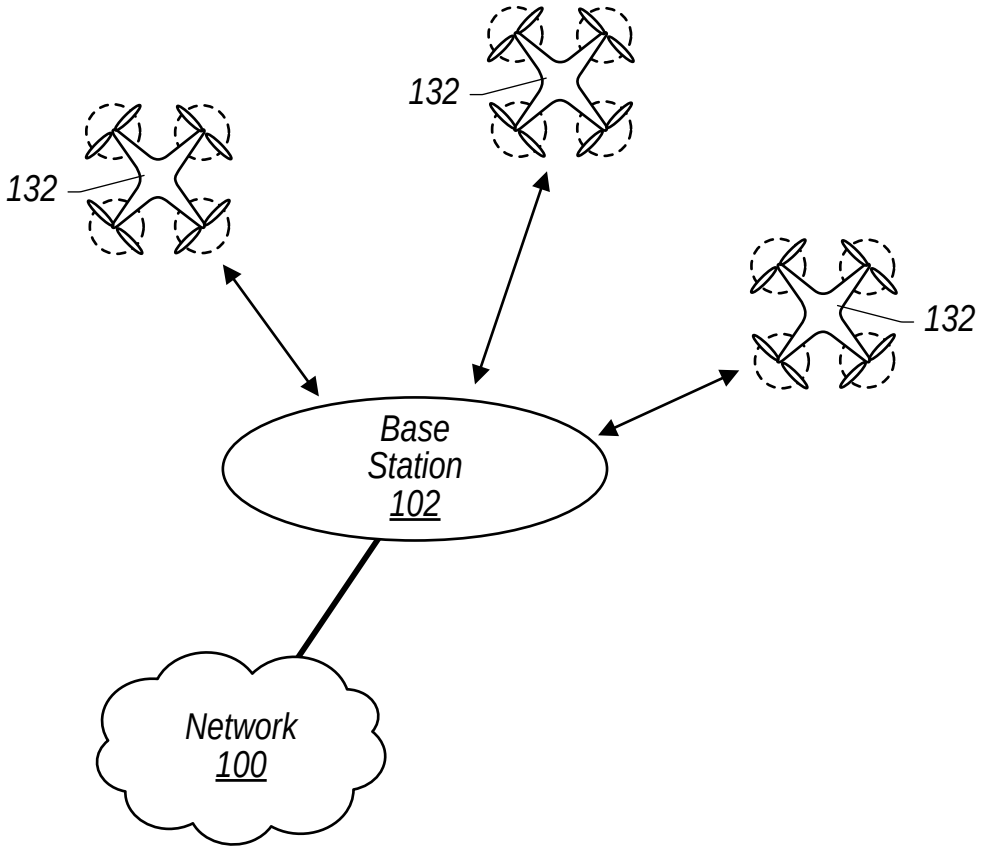

FIG. 10

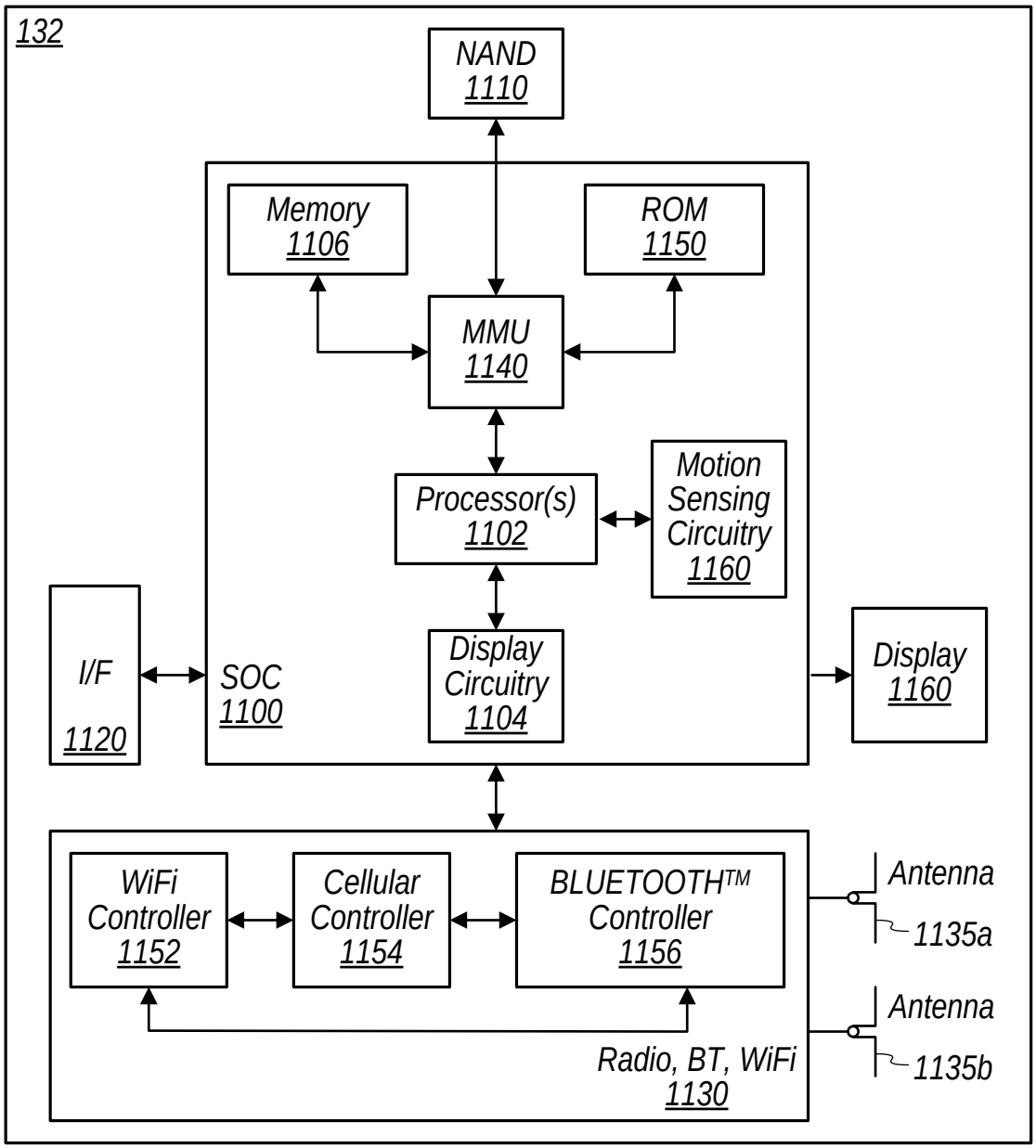
132
NAND
1110
Memory
1106
ROM
1150
MMU
1140
Processor(s)
1102
Motion
Sensing
Circuitry
1160
I/F
1120
SOC
1100
Display
Circuitry
1104
Display
1160
WiFi
Controller
1152
Cellular
Controller
1154
BLUETOOTH™
Controller
1156
Antenna
1135a
Antenna
1135b
Radio, BT, WiFi
1130

FIG. 11

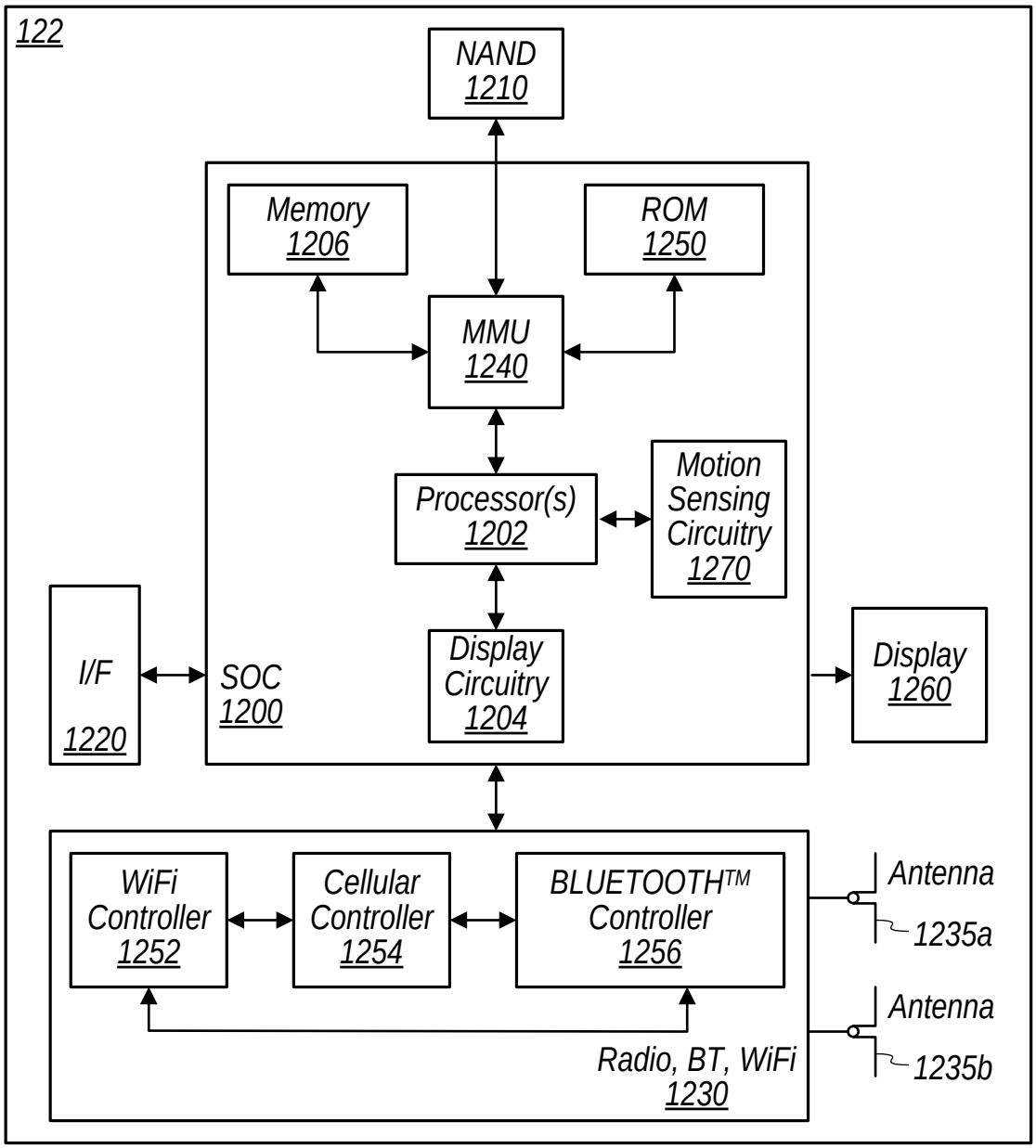
122
NAND
1210
Memory
1206
ROM
1250
MMU
1240
Processor(s)
1202
Motion
Sensing
Circuitry
1270
I/F
1220
SOC
1200
Display
Circuitry
1204
Display
1260
WiFi
Controller
1252
Cellular
Controller
1254
BLUETOOTH™
Controller
1256
Antenna
1235a
Antenna
1235b
Radio, BT, WiFi
1230

FIG. 12

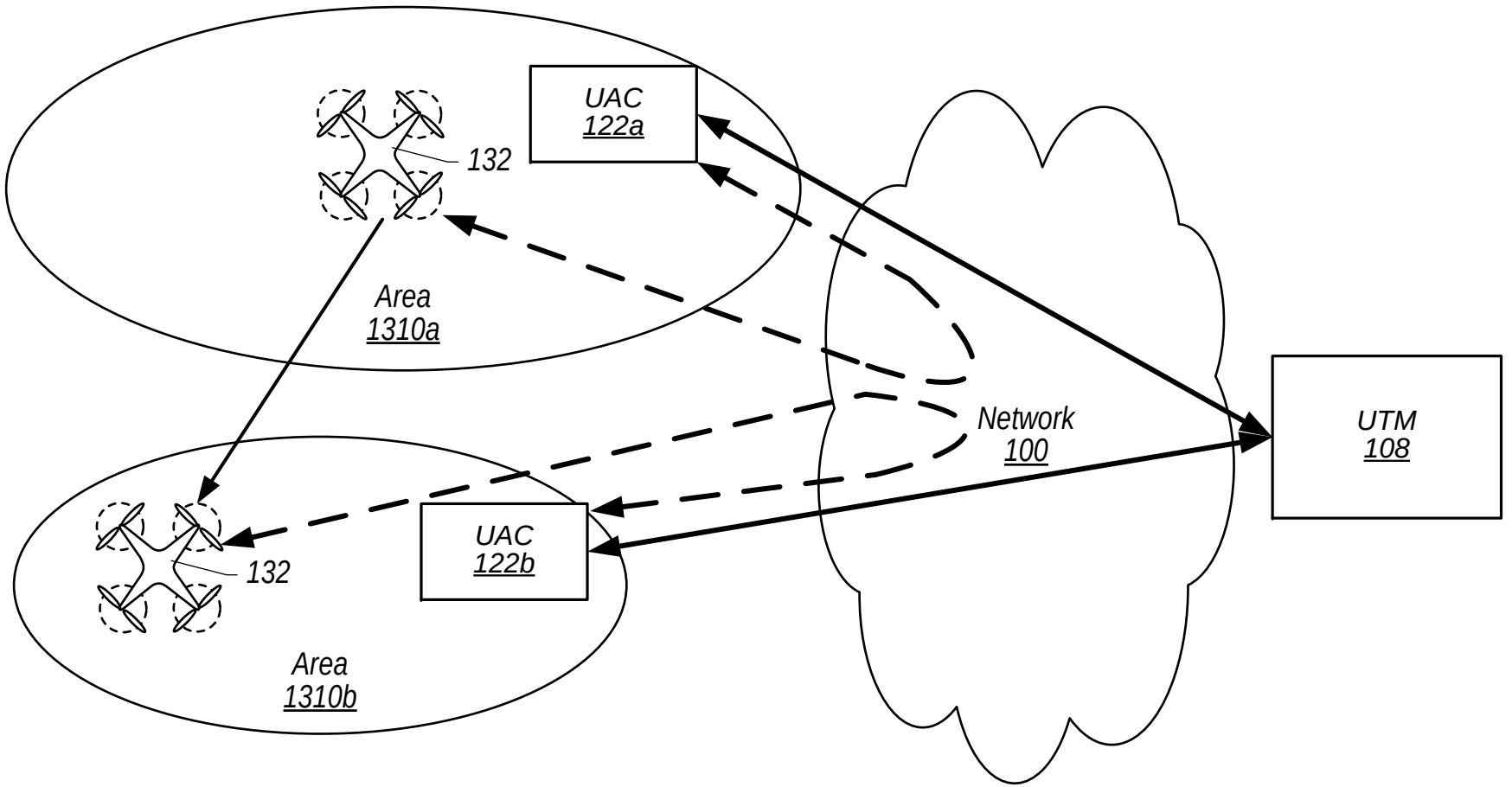
UAC
122a
132
Area
1310a
Network
100
UTM
108
UAC
122b
132
Area
1310b

FIG. 13A

UAV Controller (UAC)	Location
UAC 122a	Area 1310a
UAC 122b	Area 1310b
UAC 122c	Area 1310c
●	
●	
●	
UAC 122n	Area 1310n

FIG. 13B

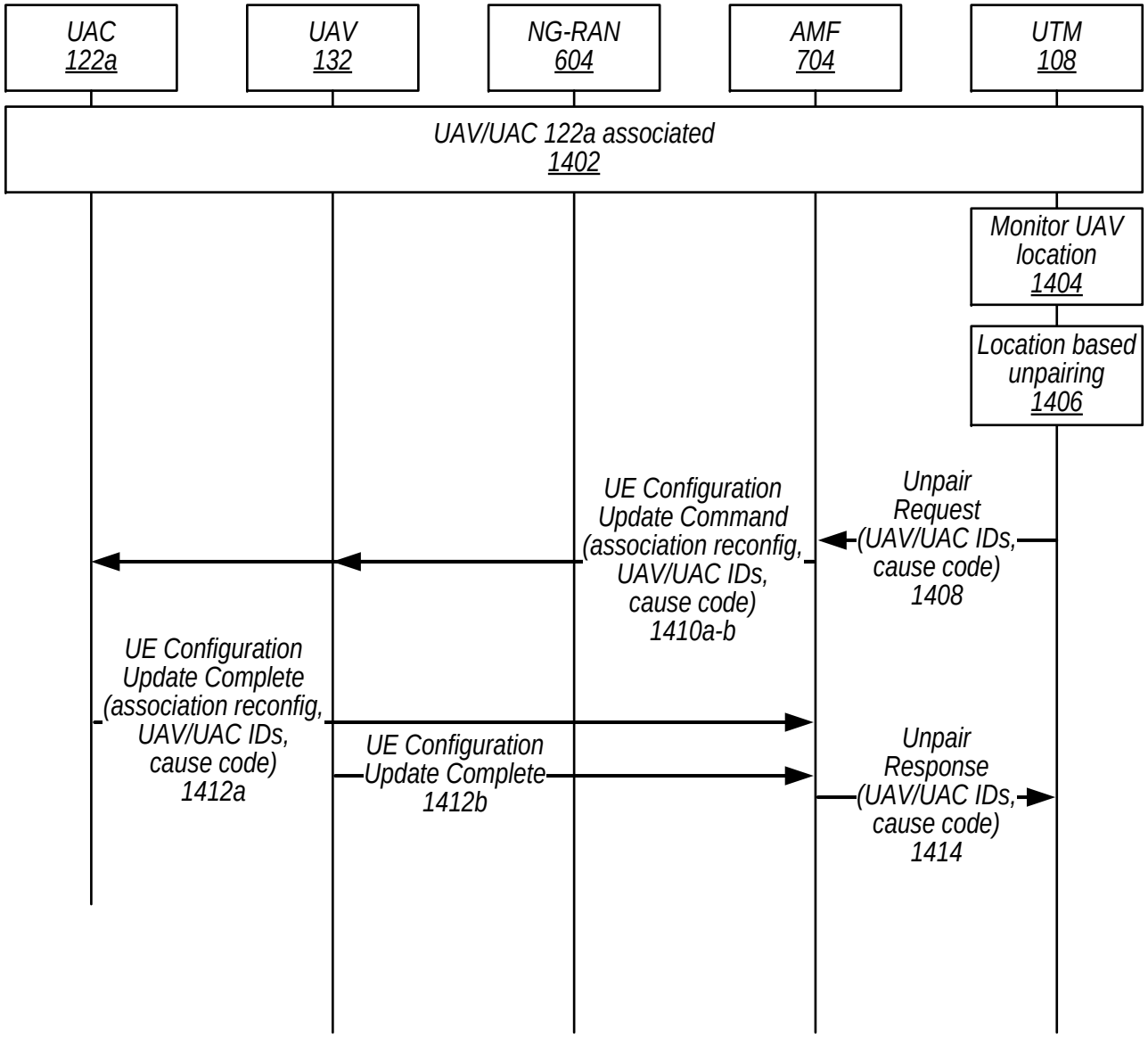
UAC
122a
UAV
132
NG-RAN
604
AMF
704
UTM
108
UAV/UAC 122a associated
1402
Monitor UAV location
1404
Location based unpairing
1406
UE Configuration Update Command (association reconfig, UAV/UAC IDs, cause code)
1410a-b
Unpair Request (UAV/UAC IDs, cause code)
1408
UE Configuration Update Complete (association reconfig, UAV/UAC IDs, cause code)
1412a
UE Configuration Update Complete
1412b
Unpair Response (UAV/UAC IDs, cause code)
1414

FIG. 14

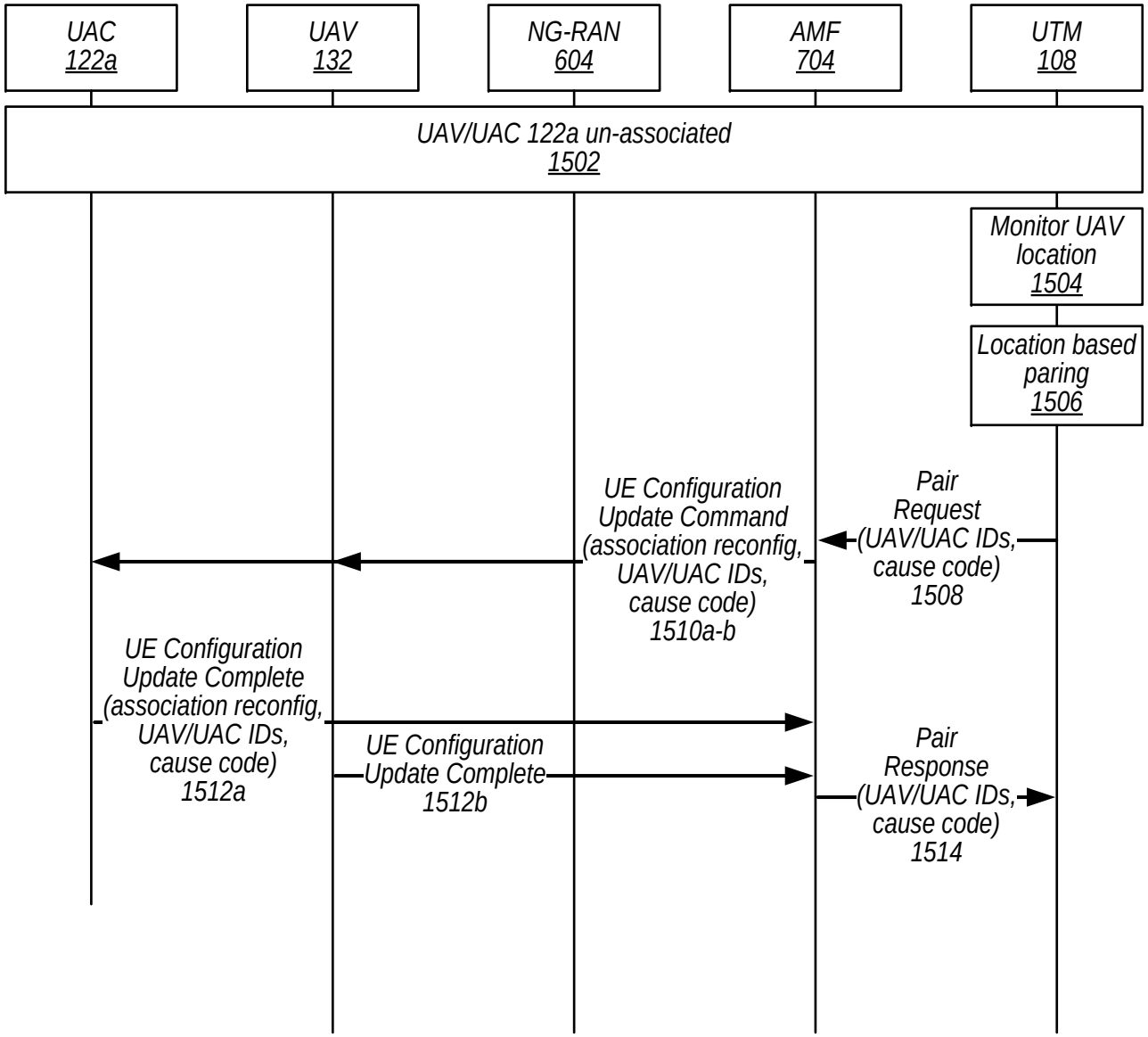
UAC
122a
UAV
132
NG-RAN
604
AMF
704
UTM
108
UAV/UAC 122a un-associated
1502
Monitor UAV location
1504
Location based paring
1506
UE Configuration Update Command (association reconfig, UAV/UAC IDs, cause code)
1510a-b
Pair Request (UAV/UAC IDs, cause code)
1508
UE Configuration Update Complete (association reconfig, UAV/UAC IDs, cause code)
1512a
UE Configuration Update Complete
1512b
Pair Response (UAV/UAC IDs, cause code)
1514

FIG. 15

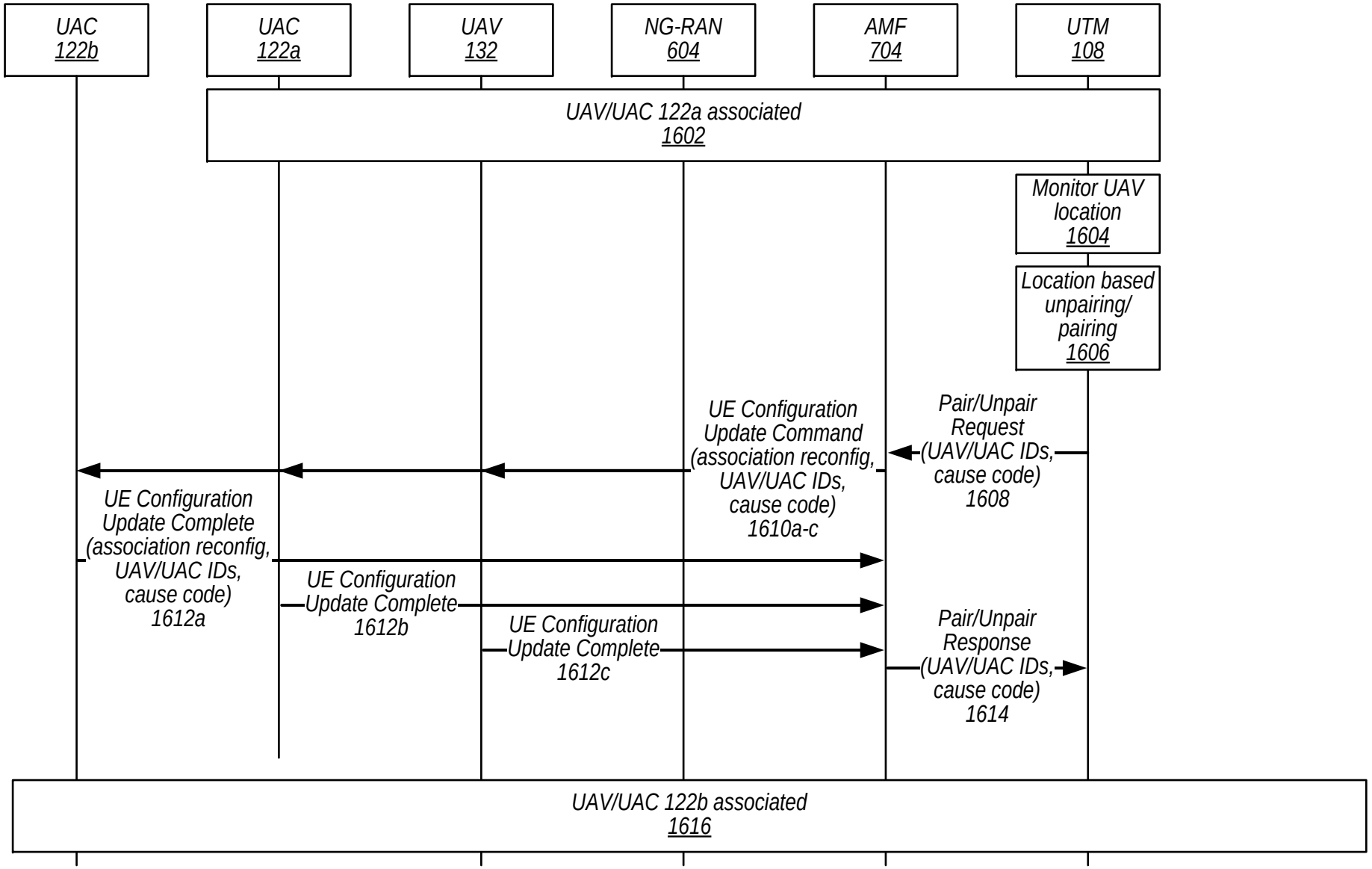
UAC
122b
UAC
122a
UAV
132
NG-RAN
604
AMF
704
UTM
108
UAV/UAC 122a associated
1602
Monitor UAV location
1604
Location based unpairing/ pairing
1606
UE Configuration Update Command (association reconfig, UAV/UAC IDs, cause code)
1610a-c
Pair/Unpair Request (UAV/UAC IDs, cause code)
1608
UE Configuration Update Complete (association reconfig, UAV/UAC IDs, cause code)
1612a
UE Configuration Update Complete
1612b
UE Configuration Update Complete
1612c
Pair/Unpair Response (UAV/UAC IDs, cause code)
1614
UAV/UAC 122b associated
1616

FIG. 16

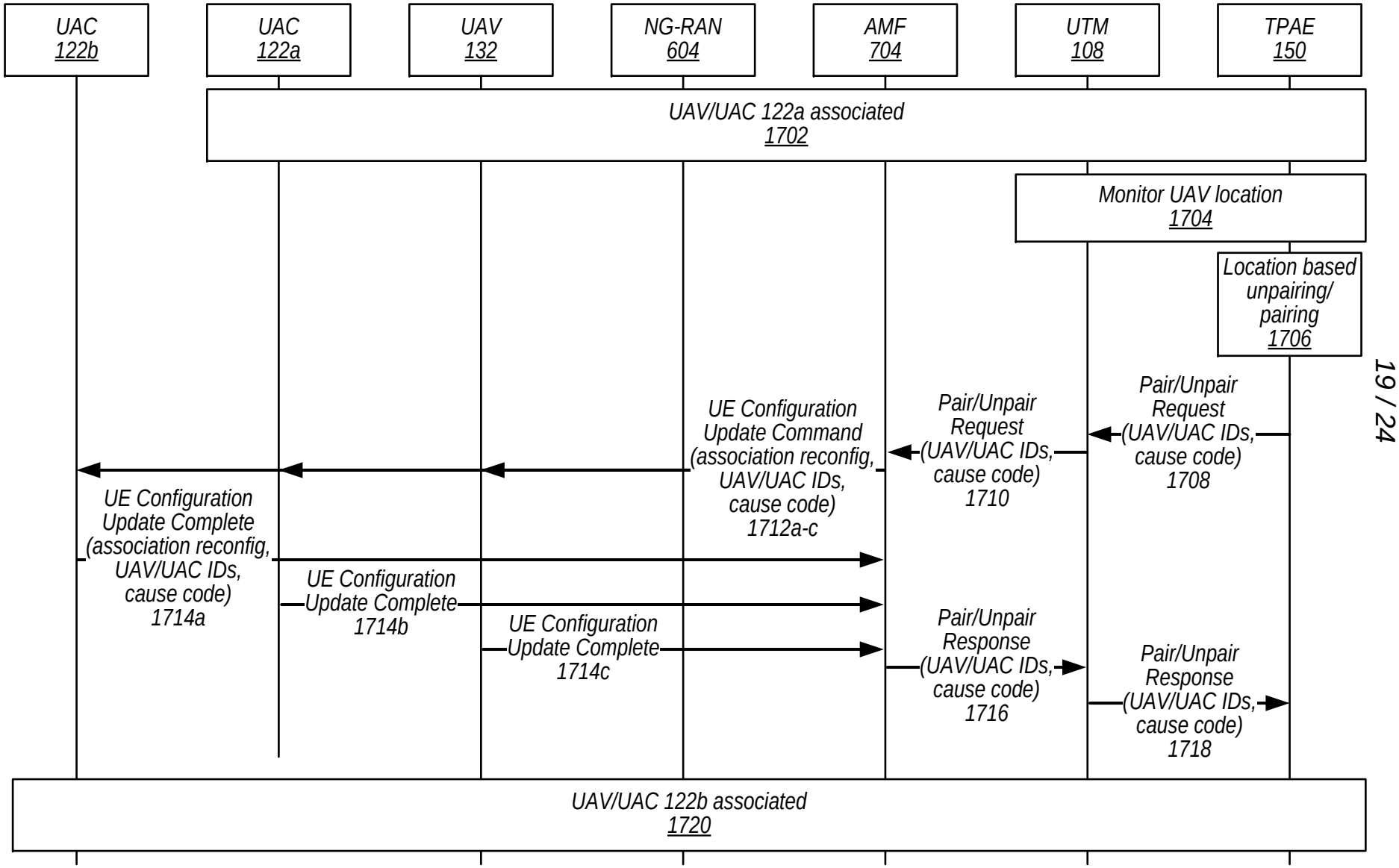
UAC
122b
UAC
122a
UAV
132
NG-RAN
604
AMF
704
UTM
108
TPAE
150
UAV/UAC 122a associated
1702
Monitor UAV location
1704
Location based unpairing/ pairing
1706
UE Configuration Update Command (association reconfig, UAV/UAC IDs, cause code)
1712a-c
Pair/Unpair Request (UAV/UAC IDs, cause code)
1710
Pair/Unpair Request (UAV/UAC IDs, cause code)
1708
UE Configuration Update Complete (association reconfig, UAV/UAC IDs, cause code)
1714a
UE Configuration Update Complete
1714b
UE Configuration Update Complete
1714c
Pair/Unpair Response (UAV/UAC IDs, cause code)
1716
Pair/Unpair Response (UAV/UAC IDs, cause code)
1718
UAV/UAC 122b associated
1720

FIG. 17

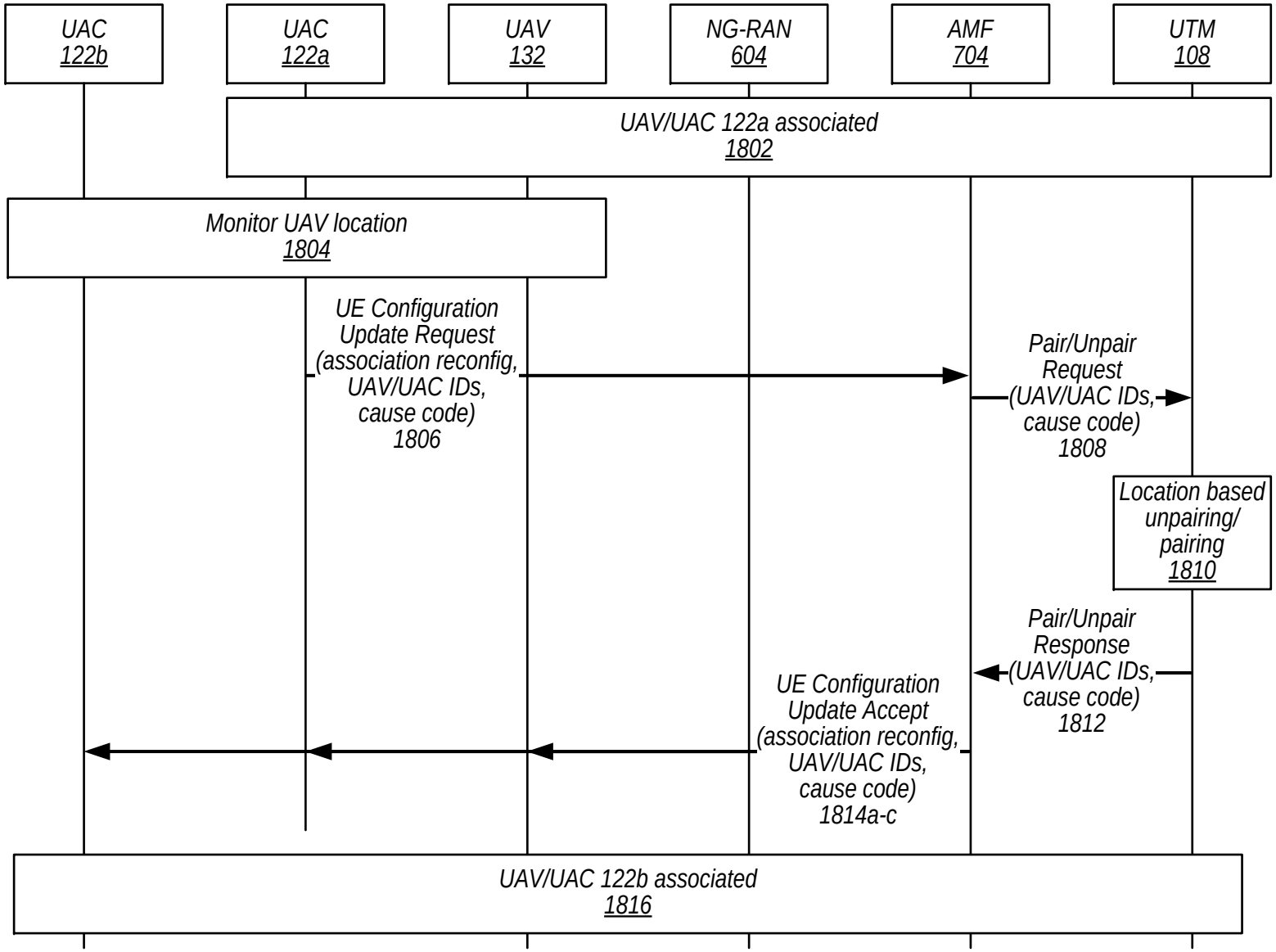
UAC
122b
UAC
122a
UAV
132
NG-RAN
604
AMF
704
UTM
108
UAV/UAC 122a associated
1802
Monitor UAV location
1804
UE Configuration
Update Request
(association reconfig,
UAV/UAC IDs,
cause code)
1806
Pair/Unpair
Request
(UAV/UAC IDs,
cause code)
1808
Location based
unpairing/
pairing
1810
Pair/Unpair
Response
(UAV/UAC IDs,
cause code)
1812
UE Configuration
Update Accept
(association reconfig,
UAV/UAC IDs,
cause code)
1814a-c
UAV/UAC 122b associated
1816

FIG. 18

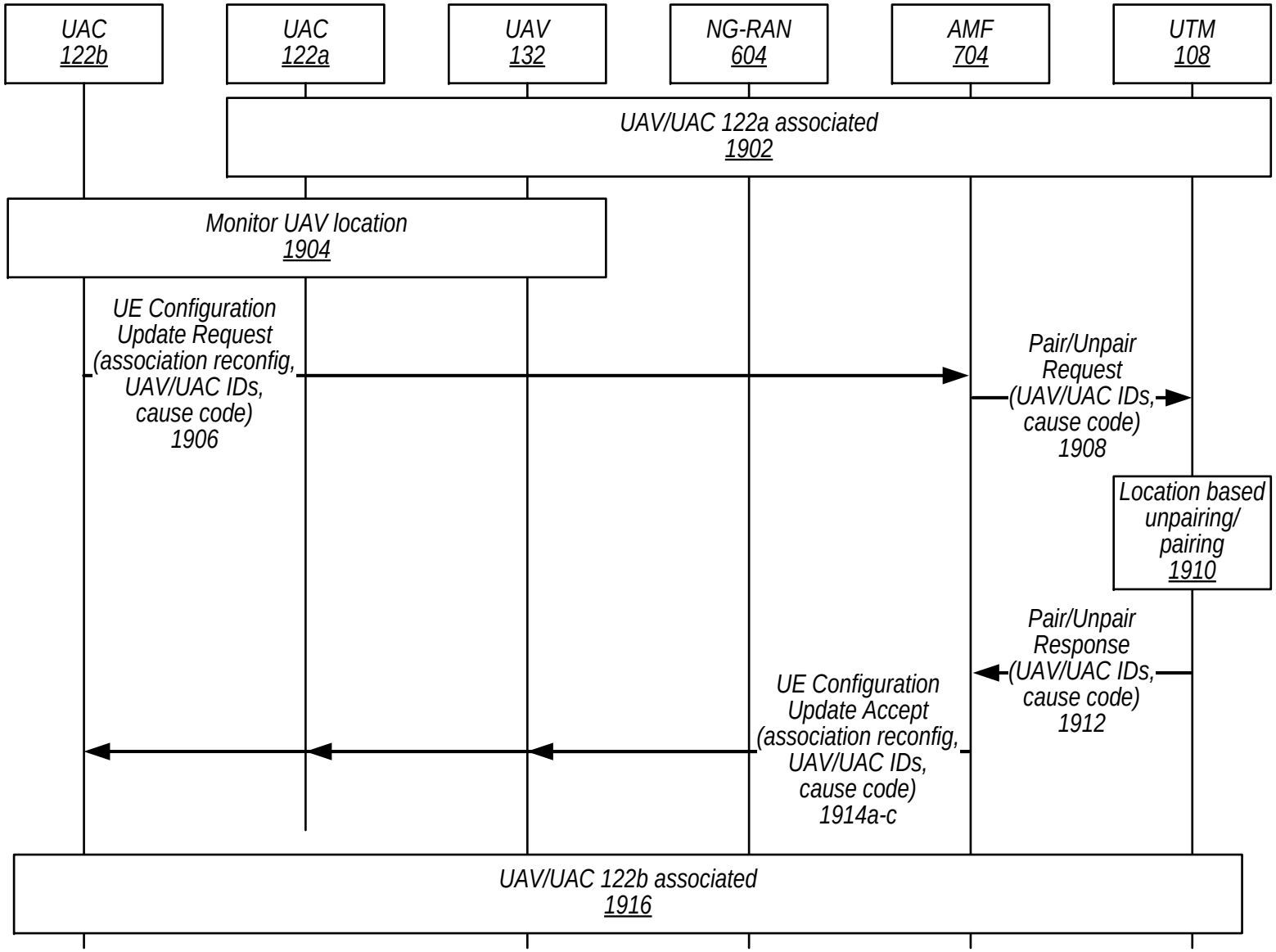
UAC
122b
UAC
122a
UAV
132
NG-RAN
604
AMF
704
UTM
108
UAV/UAC 122a associated
1902
Monitor UAV location
1904
UE Configuration
Update Request
(association reconfig,
UAV/UAC IDs,
cause code)
1906
Pair/Unpair
Request
(UAV/UAC IDs,
cause code)
1908
Location based
unpairing/
pairing
1910
Pair/Unpair
Response
(UAV/UAC IDs,
cause code)
1912
UE Configuration
Update Accept
(association reconfig,
UAV/UAC IDs,
cause code)
1914a-c
UAV/UAC 122b associated
1916

FIG. 19

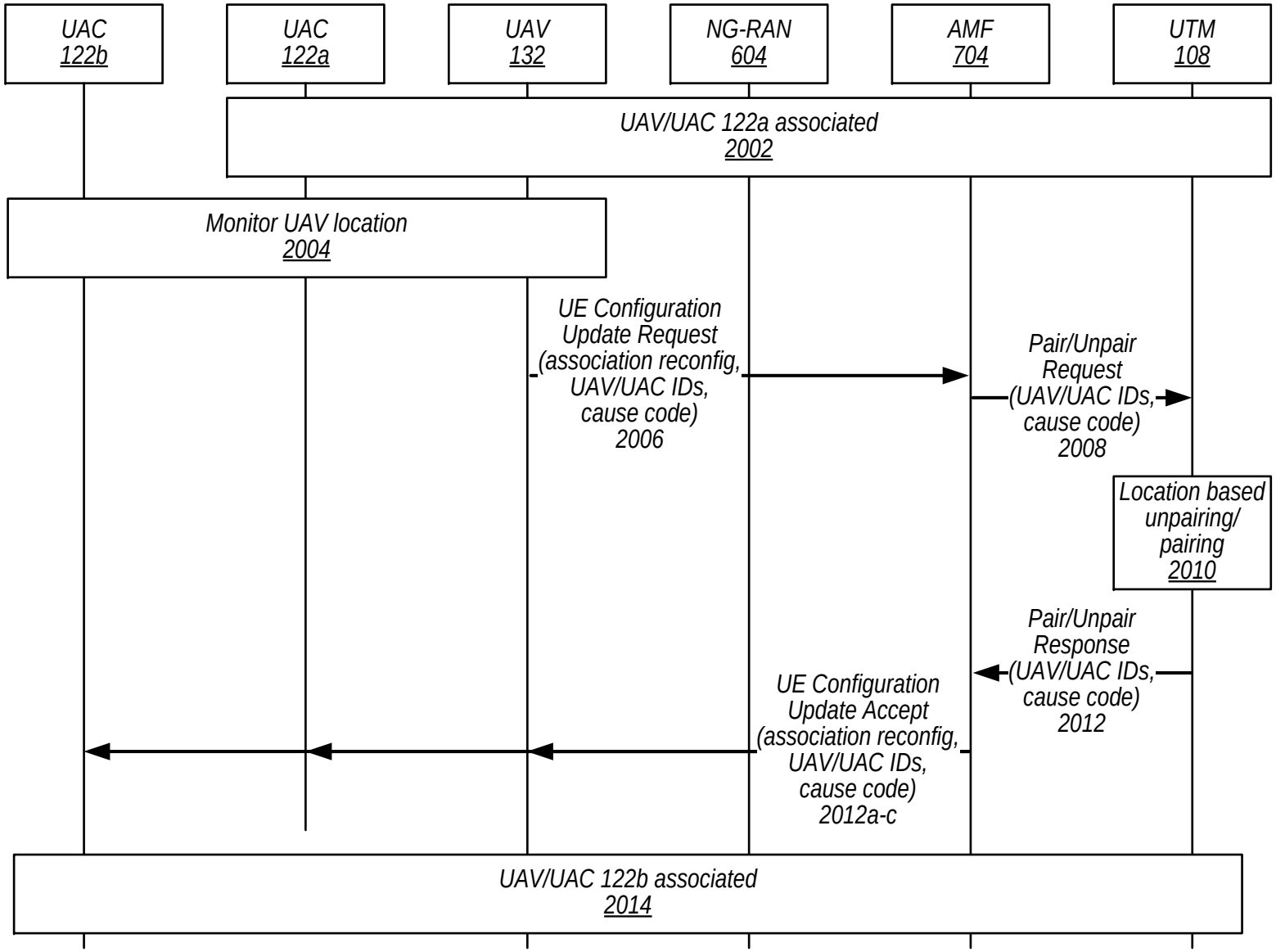
UAC
122b
UAC
122a
UAV
132
NG-RAN
604
AMF
704
UTM
108
UAV/UAC 122a associated
2002
Monitor UAV location
2004
UE Configuration
Update Request
(association reconfig,
UAV/UAC IDs,
cause code)
2006
Pair/Unpair
Request
(UAV/UAC IDs,
cause code)
2008
Location based
unpairing/
pairing
2010
Pair/Unpair
Response
(UAV/UAC IDs,
cause code)
2012
UE Configuration
Update Accept
(association reconfig,
UAV/UAC IDs,
cause code)
2012a-c
UAV/UAC 122b associated
2014

FIG. 20

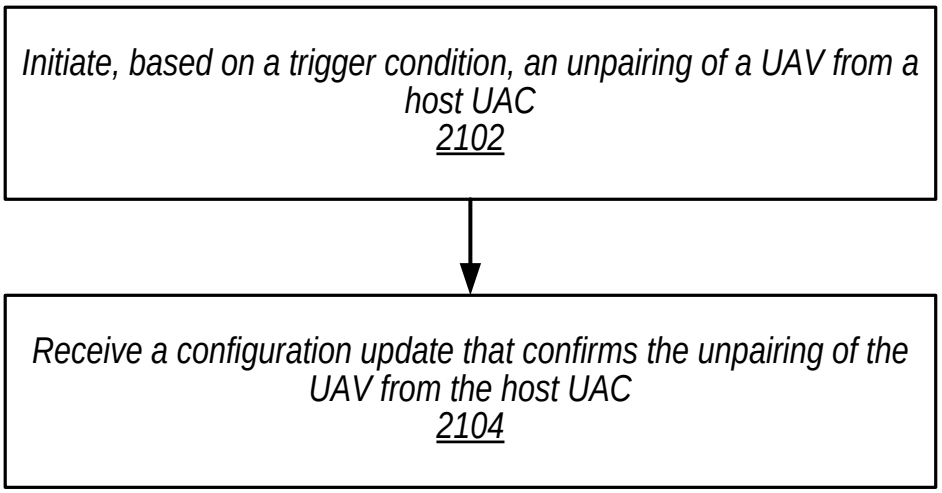
Initiate, based on a trigger condition, an unpairing of a UAV from a host UAC
2102
Receive a configuration update that confirms the unpairing of the UAV from the host UAC
2104

FIG. 21

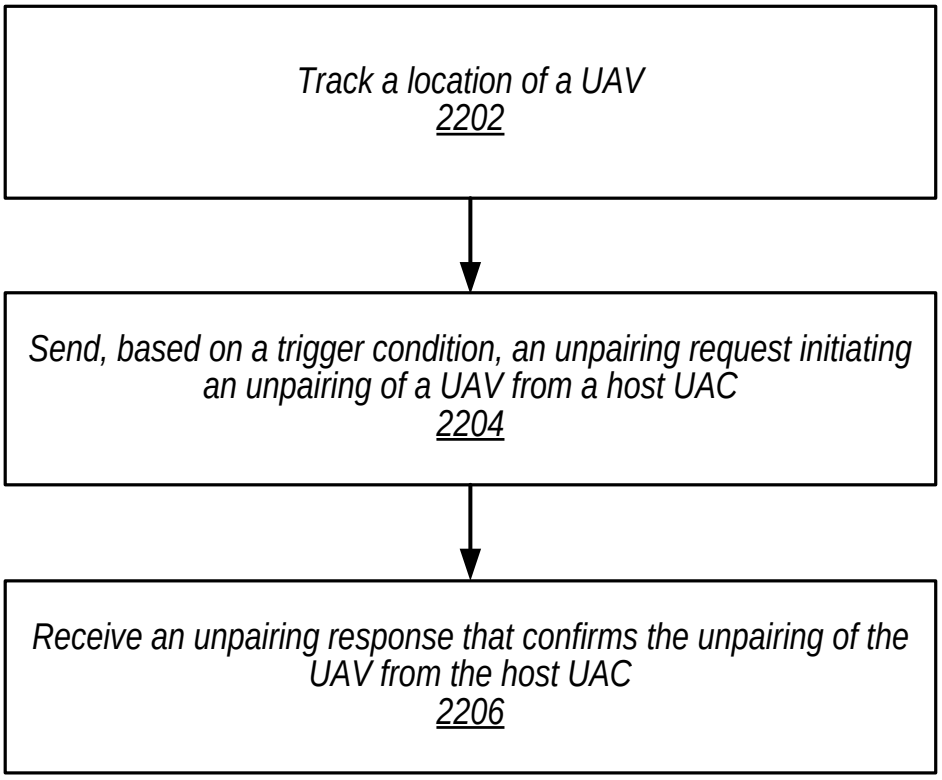
Track a location of a UAV
2202
Send, based on a trigger condition, an unpairing request initiating an unpairing of a UAV from a host UAC
2204
Receive an unpairing response that confirms the unpairing of the UAV from the host UAC
2206

FIG. 22

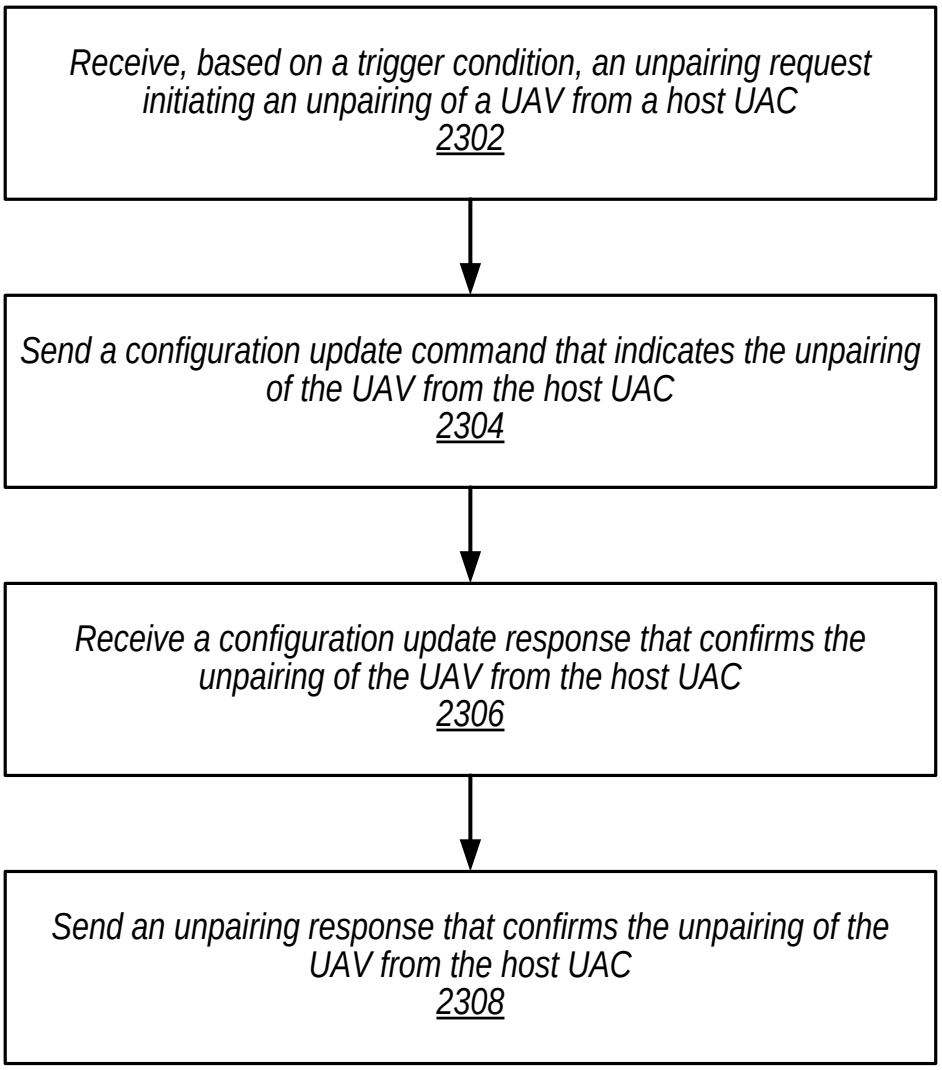
Receive, based on a trigger condition, an unpairing request initiating an unpairing of a UAV from a host UAC
2302
Send a configuration update command that indicates the unpairing of the UAV from the host UAC
2304
Receive a configuration update response that confirms the unpairing of the UAV from the host UAC
2306
Send an unpairing response that confirms the unpairing of the UAV from the host UAC
2308

FIG. 23