(12) INTERNATIONAL APPLICATION PUBLISHED UNDER THE PATENT COOPERATION TREATY (PCT)

(19) World Intellectual Property Organization
International Bureau

(43) International Publication Date
25 May 2001 (25.05.2001)

PCT

(10) International Publication Number
WO 01/36419 A1

(51) International Patent Classification[7]: C07D 473/30, A61K 31/522, A61P 25/28

(21) International Application Number: PCT/US00/41645

(22) International Filing Date: 27 October 2000 (27.10.2000)

(25) Filing Language: English

(26) Publication Language: English

(30) Priority Data:
09/442,151 16 November 1999 (16.11.1999) US

(71) Applicant *(for all designated States except US)*: NEOTHERAPEUTICS, INC. [US/US]; 157 Technology Drive, Irvine, CA 92618 (US).

(72) Inventor; and

(75) Inventor/Applicant *(for US only)*: GLASKY, Alvin [US/US]; 11955 Lambert, Tustin, CA (US).

(74) Agent: CULLMAN, Louis, C.; Oppenheimer Wolff & Donnelly LLP, 2029 Century Park East, Suite 3800, Los Angeles, CA 90067-3024 (US).

(81) Designated States *(national)*: AE, AG, AL, AM, AT, AU, AZ, BA, BB, BG, BR, BY, BZ, CA, CH, CN, CR, CU, CZ, DE, DK, DM, DZ, EE, ES, FI, GB, GD, GE, GH, GM, HR, HU, ID, IL, IN, IS, JP, KE, KG, KP, KR, KZ, LC, LK, LR, LS, LT, LU, LV, MA, MD, MG, MK, MN, MW, MX, MZ, NO, NZ, PL, PT, RO, RU, SD, SE, SG, SI, SK, SL, TJ, TM, TR, TT, TZ, UA, UG, US, UZ, VN, YU, ZA, ZW.

(84) Designated States *(regional)*: ARIPO patent (GH, GM, KE, LS, MW, MZ, SD, SL, SZ, TZ, UG, ZW), Eurasian patent (AM, AZ, BY, KG, KZ, MD, RU, TJ, TM), European patent (AT, BE, CH, CY, DE, DK, ES, FI, FR, GB, GR, IE, IT, LU, MC, NL, PT, SE), OAPI patent (BF, BJ, CF, CG, CI, CM, GA, GN, GW, ML, MR, NE, SN, TD, TG).

Published:
— *With international search report.*

[Continued on next page]

(54) Title: USE OF 9-SUBSTITUTED HYPOXANTHINE DERIVATIVES TO STIMULATE REGENERATION OF NERVOUS TISSUE

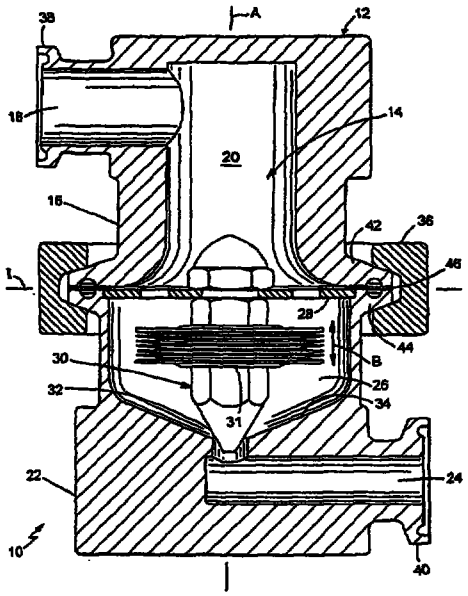

(57) Abstract: The present invention comprises a method of stimulating regeneration or survival of a mammalian motor neuron or of a mammalian sensory neuron comprising administering to a mammal an effective amount of a compound that is a 9-substituted hypoxanthine derivative linked through a linker to p-aminobenzoic acid moiety or of a salt or prodrug ester of such a compound. Preferably, the compound is N-4-carboxyphenyl-3-(6-oxohydropurin-9-yl) propanamide. The invention also includes pharmaceutical compositions formulated for stimulation of regeneration of a mammalian motor neuron comprising the 9-substituted hypoxanthine derivative and a pharmaceutically acceptable carrier.

WO 01/36419 A1

— *Before the expiration of the time limit for amending the claims and to be republished in the event of receipt of amendments.*

For two-letter codes and other abbreviations, refer to the "Guidance Notes on Codes and Abbreviations" appearing at the beginning of each regular issue of the PCT Gazette.