(12) INTERNATIONAL APPLICATION PUBLISHED UNDER THE PATENT COOPERATION TREATY (PCT)

(19) World Intellectual Property Organization
International Bureau

(43) International Publication Date
22 July 2010 (22.07.2010)

PCT

(10) International Publication Number
WO 2010/082974 A3

(51) International Patent Classification:
F41G 5/02 (2006.01) *B25J 13/00* (2006.01)
F41A 9/50 (2006.01) *F41H 13/00* (2006.01)
F41G 3/16 (2006.01) *F41A 9/38* (2006.01)

(21) International Application Number:
PCT/US2009/065417

(22) International Filing Date:
20 November 2009 (20.11.2009)

(25) Filing Language: English

(26) Publication Language: English

(30) Priority Data:
61/116,746 21 November 2008 (21.11.2008) US
61/177,797 13 May 2009 (13.05.2009) US
12/607,393 28 October 2009 (28.10.2009) US

(71) Applicant *(for all designated States except US)*: **U.S. ARMY RDECOM-ARDEC** [US/US]; Picatinny Legal Office, Bldg. 3, Picatinny, New Jersey 07806-5000 (US).

(72) Inventors; and
(75) Inventors/Applicants *(for US only)*: **TESTA, Robert** [US/US]; 26 Wawayanda Road, Warwick, New York 10990 (US). **MERA, Michael** [US/US]; 140 Palomino Circle, Bangor, Pennsylvania 18013 (US). **BURGER-MEISTER, William** [US/US]; 207 Concord Drive, Freehold, New Jersey 07728 (US). **HOFFMAN, Brian** [US/US]; 35 Glenn Court, Bangor, Pennsylvania 18013 (US). **LEE, James** [US/US]; 23 Knollwood Terrace, Randolph, New Jersey 07869 (US). **CEN, Bai Ming** [US/US]; 43 Van Wagenen Avenue, Apt. 4G, Jersey City, New Jersey 07306 (US).

(74) Agent: **MORAN, John**; U.S. ARMY RDECOM-ARDEC, PICATINNY Legal Office, Bldg. 3, Picatinny, New Jersey 07806-5000 (US).

(81) Designated States *(unless otherwise indicated, for every kind of national protection available)*: AE, AG, AL, AM, AO, AT, AU, AZ, BA, BB, BG, BH, BR, BW, BY, BZ, CA, CH, CL, CN, CO, CR, CU, CZ, DE, DK, DM, DO, DZ, EC, EE, EG, ES, FI, GB, GD, GE, GH, GM, GT, HN, HR, HU, ID, IL, IN, IS, JP, KE, KG, KM, KN, KP, KR, KZ, LA, LC, LK, LR, LS, LT, LU, LY, MA, MD, ME, MG, MK, MN, MW, MX, MY, MZ, NA, NG, NI, NO, NZ, OM, PE, PG, PH, PL, PT, RO, RS, RU, SC, SD, SE, SG, SK, SL, SM, ST, SV, SY, TJ, TM, TN, TR, TT, TZ, UA, UG, US, UZ, VC, VN, ZA, ZM, ZW.

(84) Designated States *(unless otherwise indicated, for every kind of regional protection available)*: ARIPO (BW, GH, GM, KE, LS, MW, MZ, NA, SD, SL, SZ, TZ, UG, ZM, ZW), Eurasian (AM, AZ, BY, KG, KZ, MD, RU, TJ,

[Continued on next page]

(54) Title: AUTOMATICALLY-RELOADABLE, REMOTELY OPERATED WEAPON SYSTEM HAVING AN EXTERNALLY-POWERED FIREARM

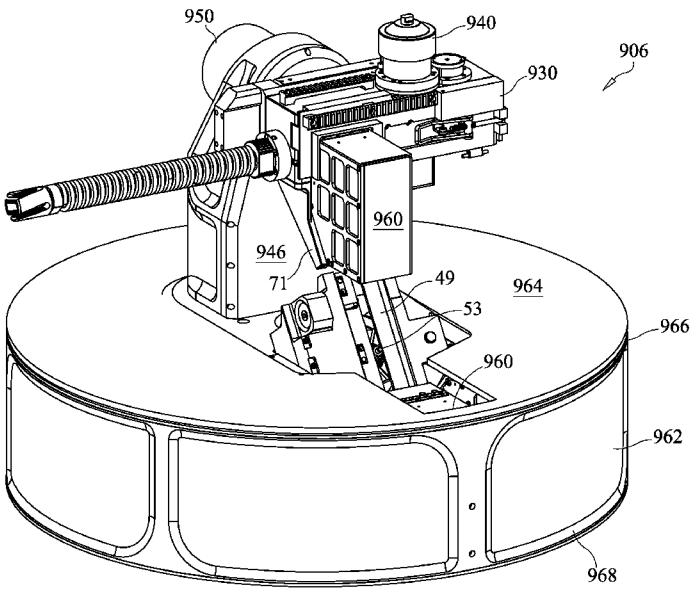

FIG. 22

(57) Abstract: An automatically-reloadable, remotely-operated weapon system may include an operator station located distant from a weapon station. The weapon station may include an externally-powered firearm, a firearm mover for adjusting an azimuth and an angle of inclination of the firearm, and an ammunition storage and transport system for automatically moving ammunition to and from the firearm. From the operator station, a user may remotely control all aspects of firearm operation and ammunition reloading.

WO 2010/082974 A3

TM), European (AT, BE, BG, CH, CY, CZ, DE, DK, EE, ES, FI, FR, GB, GR, HR, HU, IE, IS, IT, LT, LU, LV, MC, MK, MT, NL, NO, PL, PT, RO, SE, SI, SK, SM, TR), OAPI (BF, BJ, CF, CG, CI, CM, GA, GN, GQ, GW, ML, MR, NE, SN, TD, TG).

Published:

— *with international search report (Art. 21(3))*

— *before the expiration of the time limit for amending the claims and to be republished in the event of receipt of amendments (Rule 48.2(h))*

(88) Date of publication of the international search report:
14 October 2010