electronic device 100

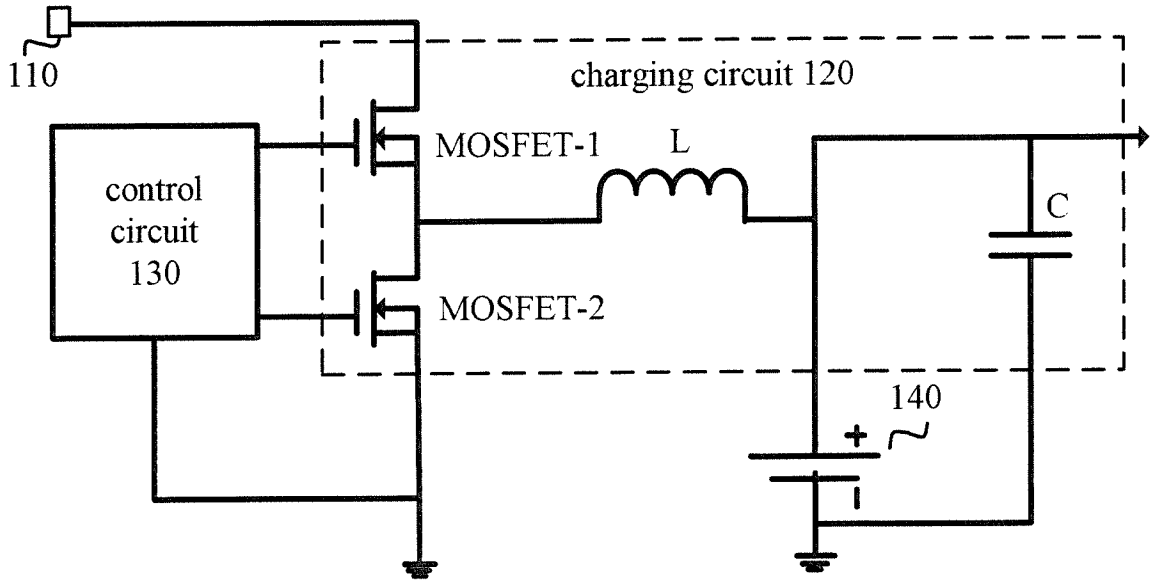

Fig. 1

electronic device 200

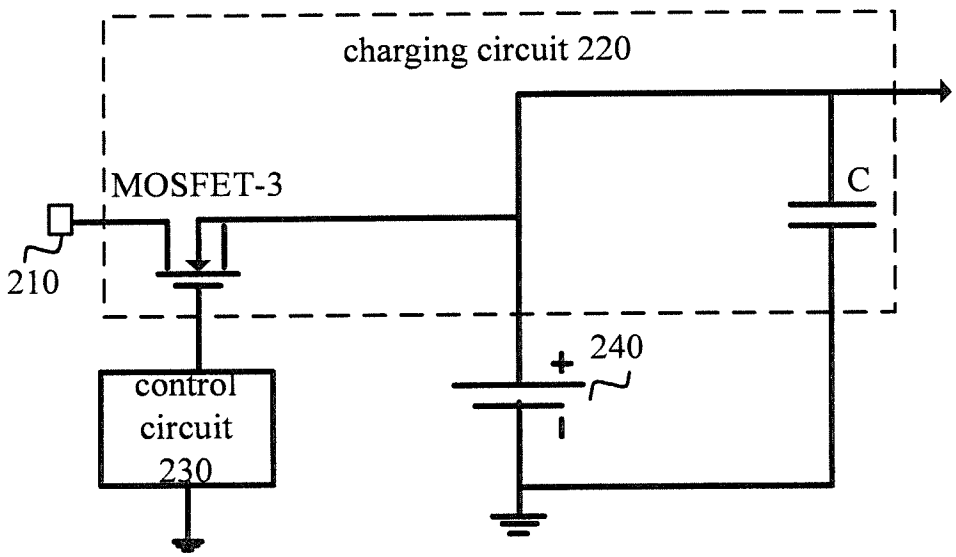

Fig. 2

electronic device 300

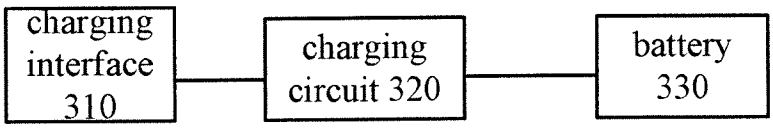

Fig. 3

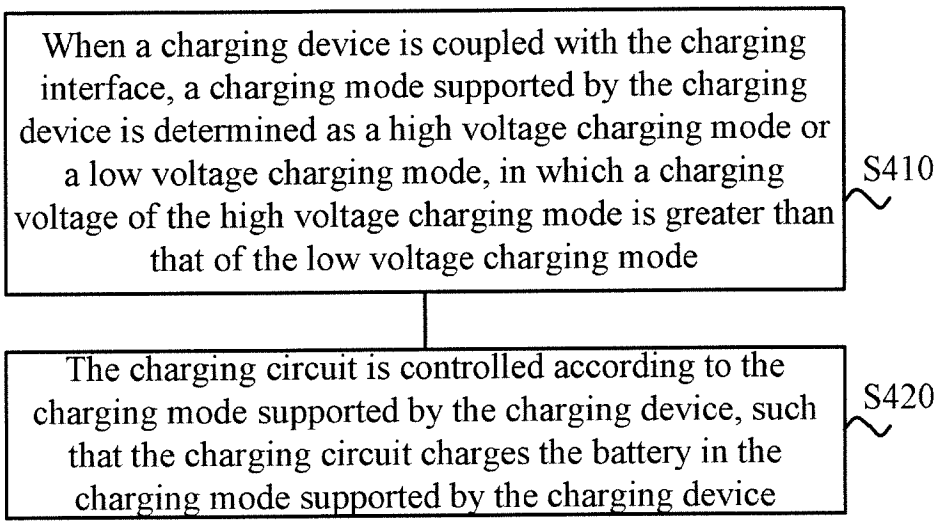
When a charging device is coupled with the charging interface, a charging mode supported by the charging device is determined as a high voltage charging mode or a low voltage charging mode, in which a charging voltage of the high voltage charging mode is greater than that of the low voltage charging mode
S410
The charging circuit is controlled according to the charging mode supported by the charging device, such that the charging circuit charges the battery in the charging mode supported by the charging device
S420

Fig. 4

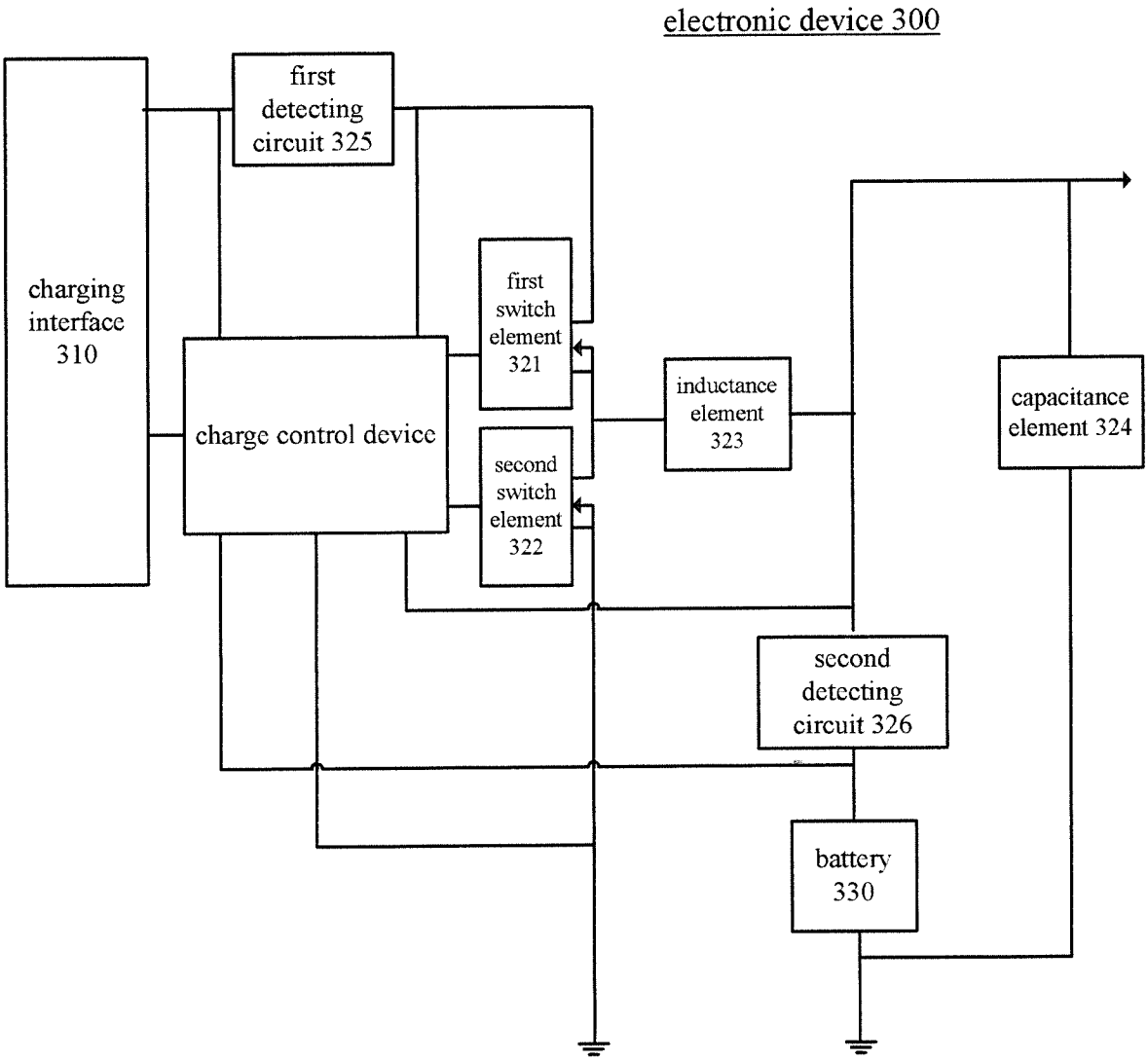
electronic device 300
charging interface 310
first detecting circuit 325
charge control device
first switch element 321
second switch element 322
inductance element 323
capacitance element 324
second detecting circuit 326
battery 330

Fig. 5

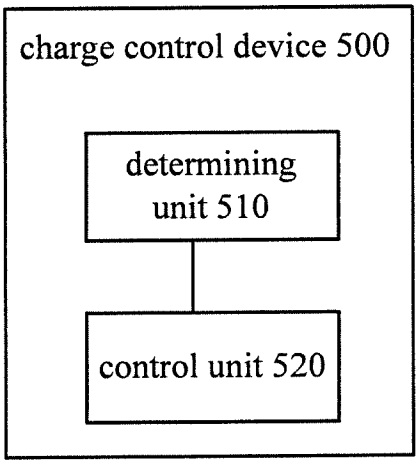
charge control device 500
determining unit 510
control unit 520

Fig. 6

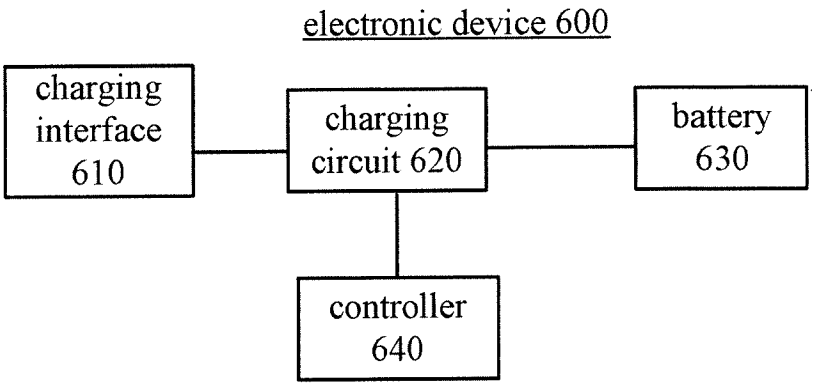
electronic device 600
charging interface 610
charging circuit 620
battery 630
controller 640

Fig. 7

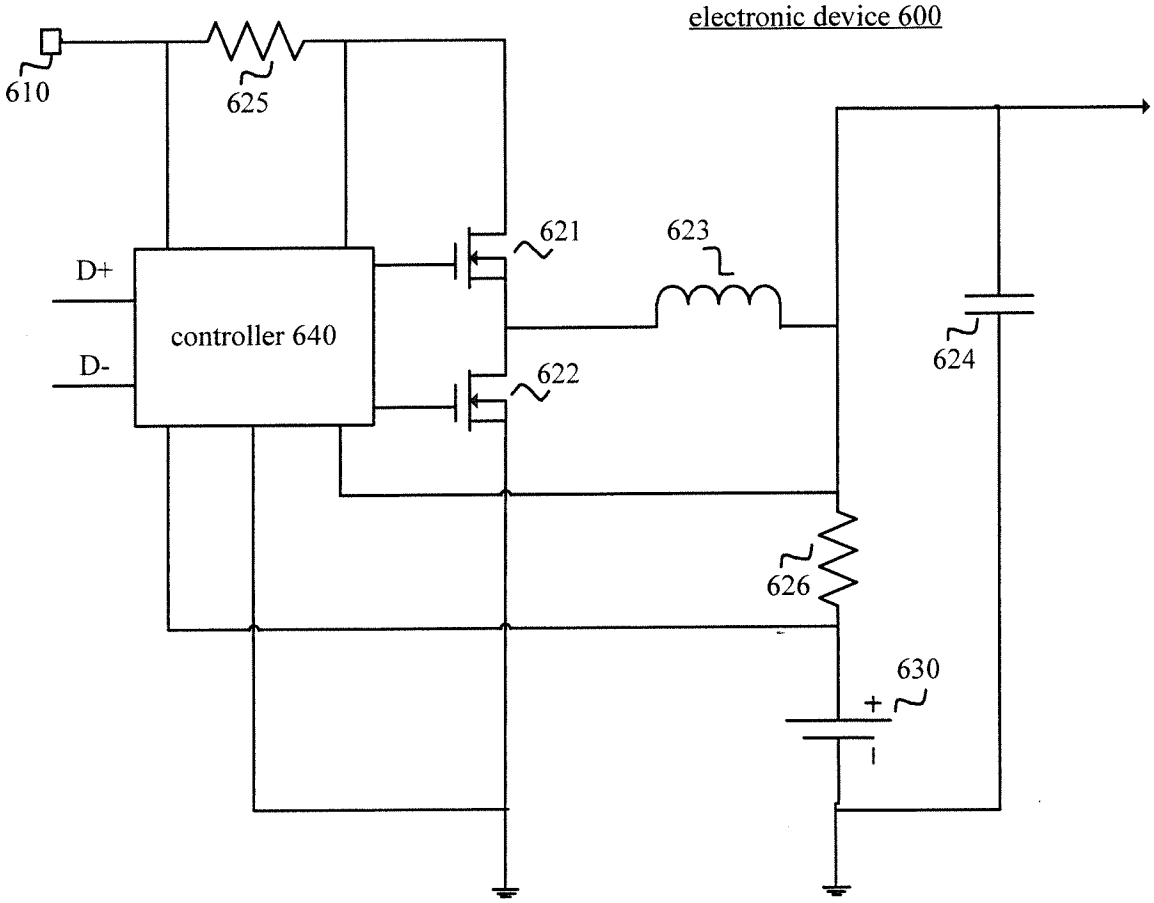
electronic device 600
610
625
621
623
D+
controller 640
D-
622
624
626
630
+
-

Fig. 8