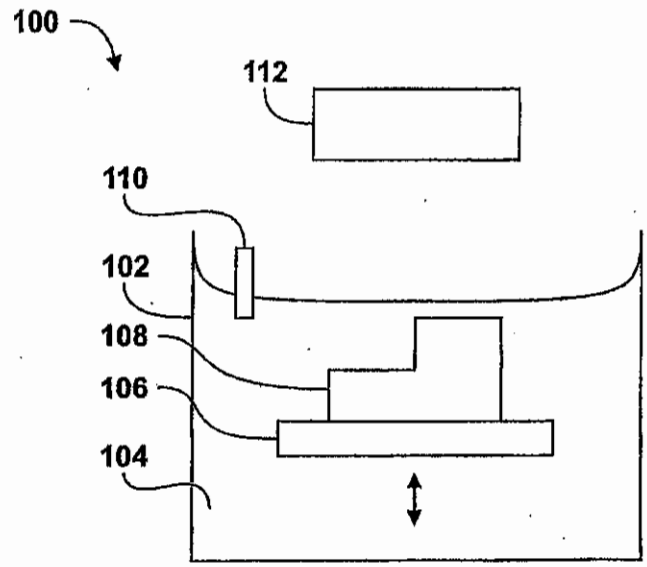

FIG. 1

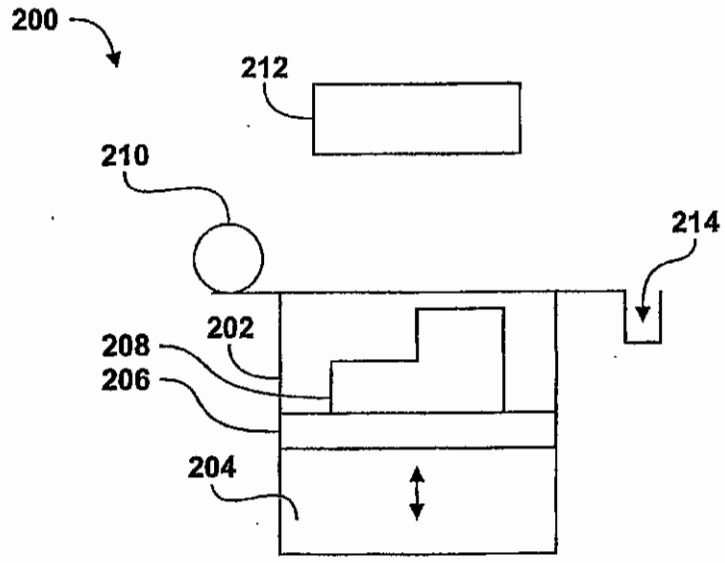

FIG. 2

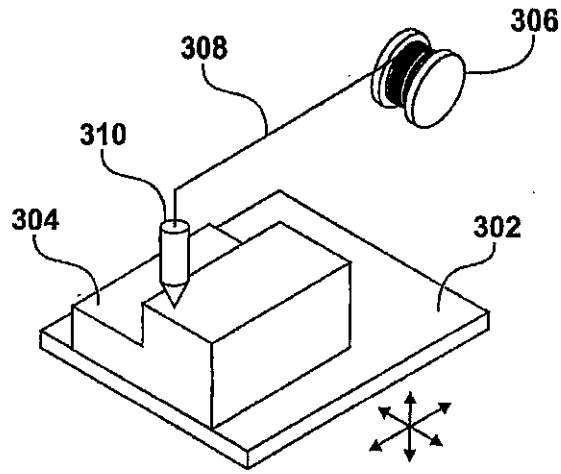

FIG. 3

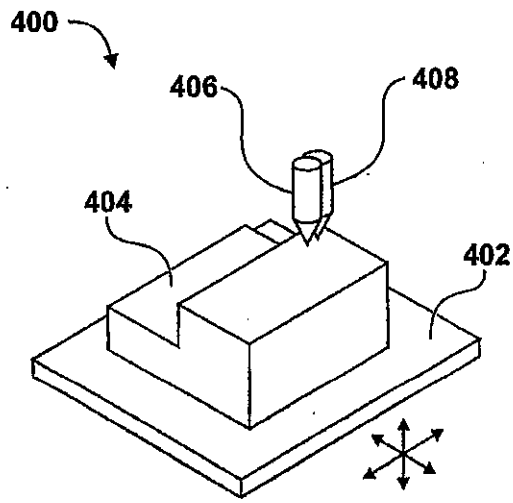

FIG. 4

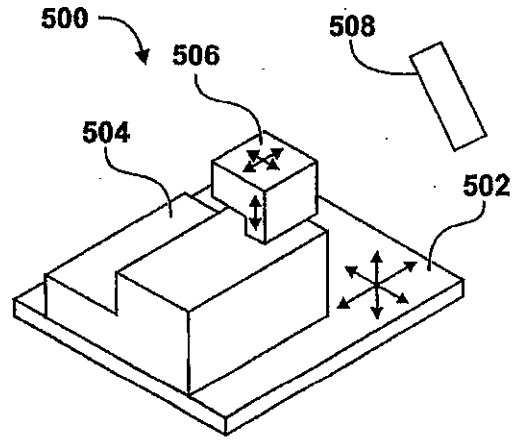

FIG. 5

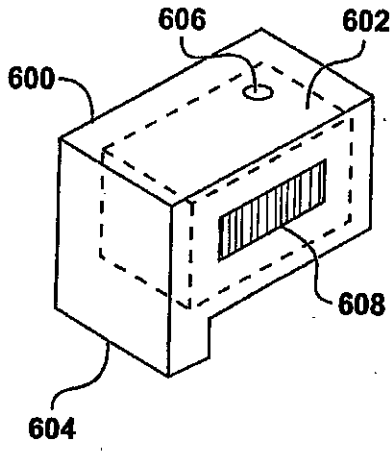

FIG. 6

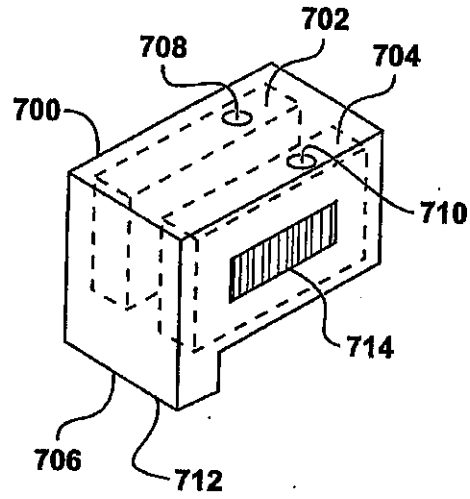

FIG. 7

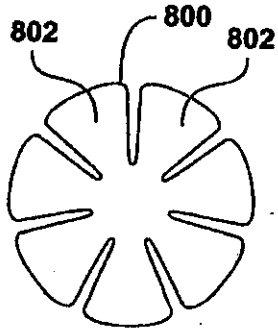

FIG. 8

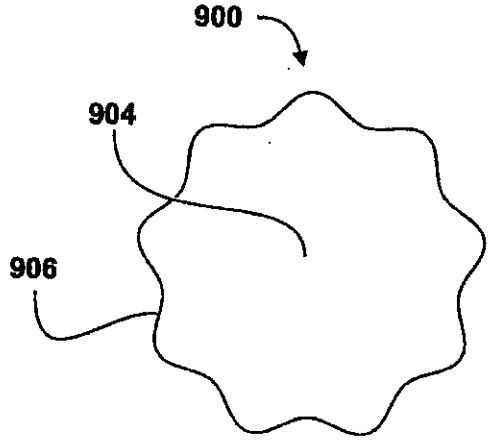

FIG. 9

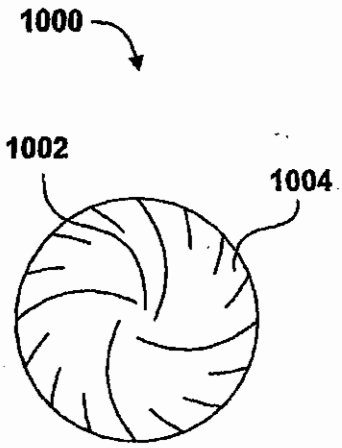

FIG. 10

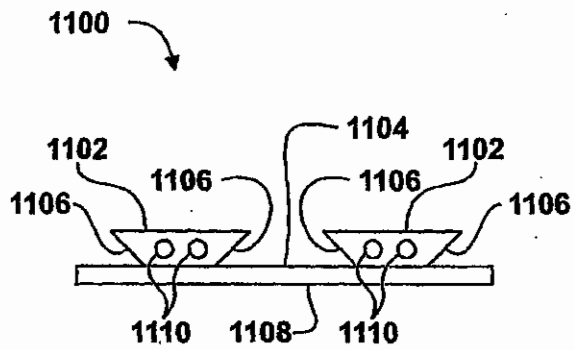

FIG. 11

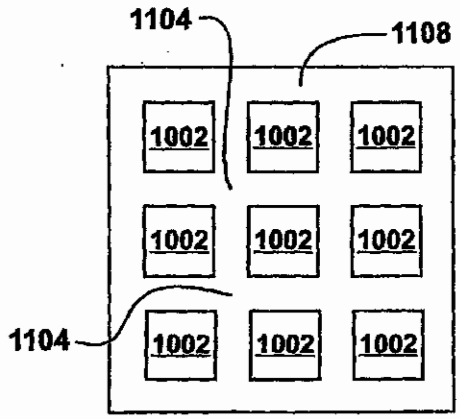

FIG. 12

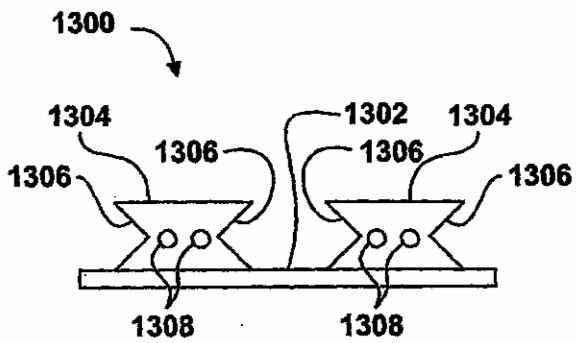

FIG. 13

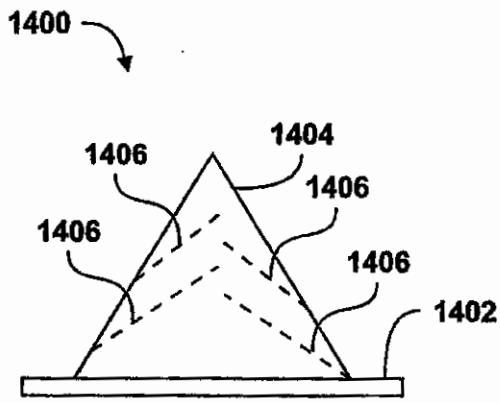

FIG. 14

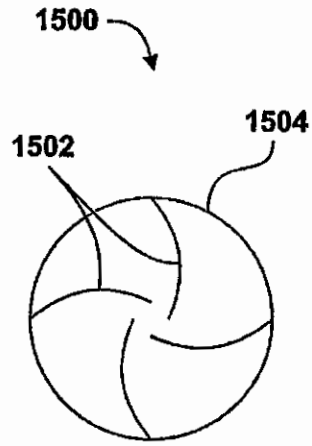

FIG. 15

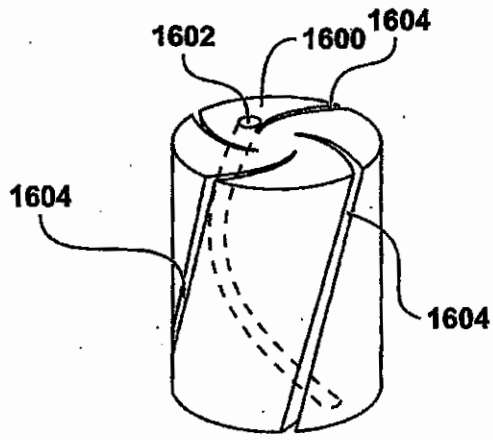

FIG. 16

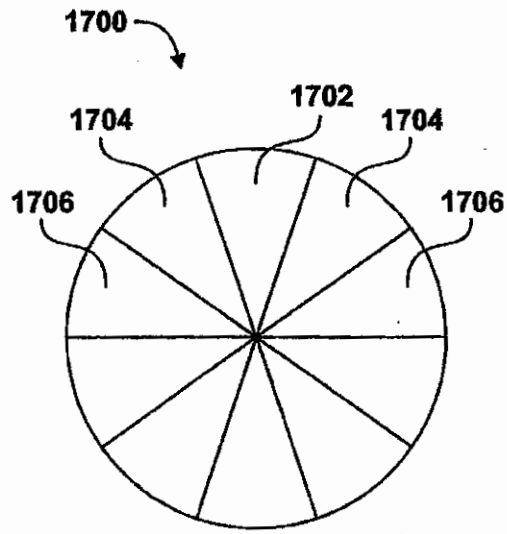

FIG. 17

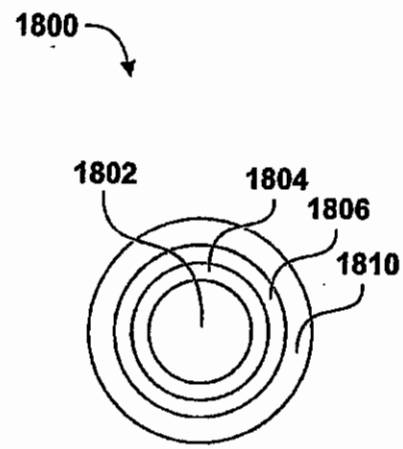
1800
1802
1804
1806
1810

FIG. 18

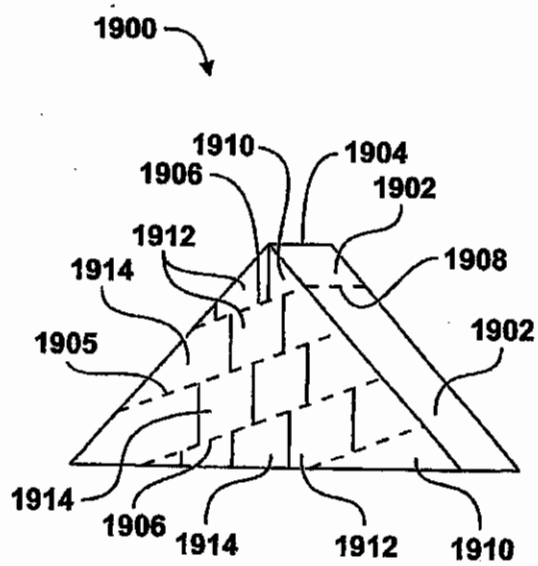
1900
1910
1904
1906
1902
1912
1914
1908
1905
1902
1914
1906
1914
1912
1910

FIG. 19

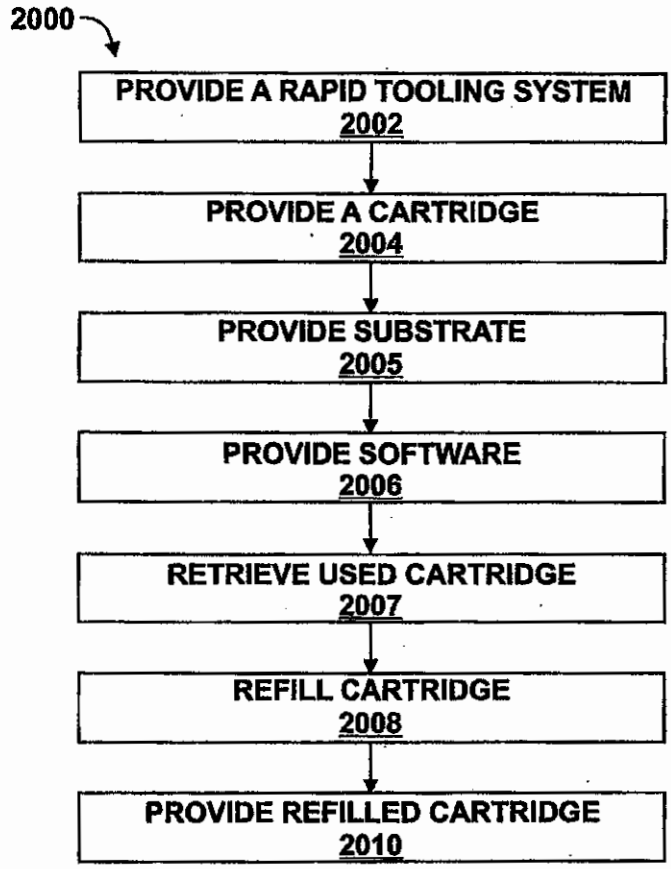
2000
PROVIDE A RAPID TOOLING SYSTEM
2002
PROVIDE A CARTRIDGE
2004
PROVIDE SUBSTRATE
2005
PROVIDE SOFTWARE
2006
RETRIEVE USED CARTRIDGE
2007
REFILL CARTRIDGE
2008
PROVIDE REFILLED CARTRIDGE
2010

FIG. 20

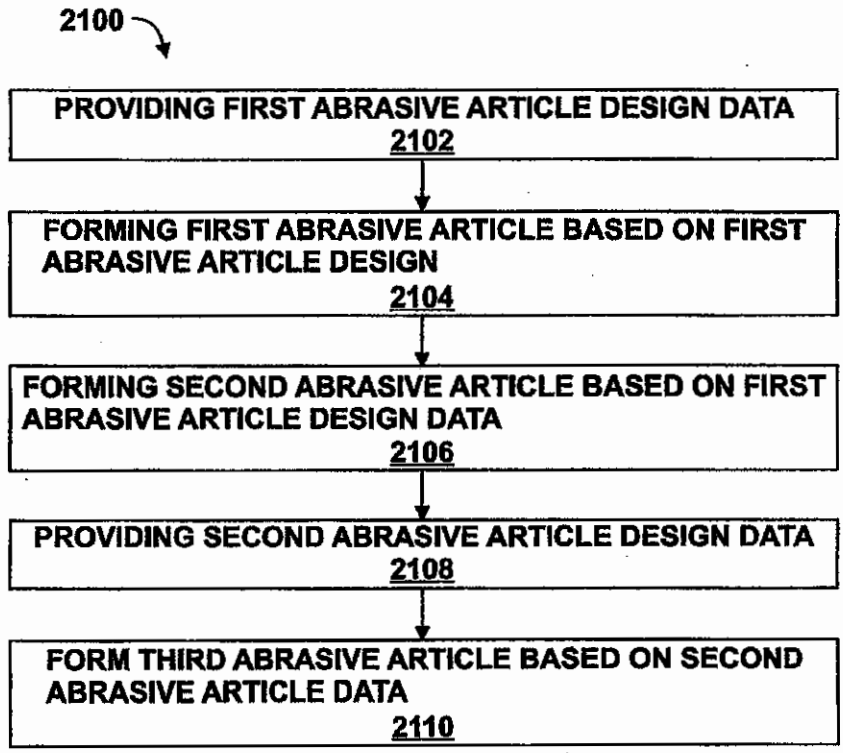
2100
PROVIDING FIRST ABRASIVE ARTICLE DESIGN DATA
2102
FORMING FIRST ABRASIVE ARTICLE BASED ON FIRST ABRASIVE ARTICLE DESIGN
2104
FORMING SECOND ABRASIVE ARTICLE BASED ON FIRST ABRASIVE ARTICLE DESIGN DATA
2106
PROVIDING SECOND ABRASIVE ARTICLE DESIGN DATA
2108
FORM THIRD ABRASIVE ARTICLE BASED ON SECOND ABRASIVE ARTICLE DATA
2110

FIG. 21