(12) INTERNATIONAL APPLICATION PUBLISHED UNDER THE PATENT COOPERATION TREATY (PCT)

(19) World Intellectual Property Organization
International Bureau

(43) International Publication Date
07 December 2023 (07.12.2023)

WIPO | PCT

(10) International Publication Number
WO 2023/235742 A1

(51) International Patent Classification:
B01J 4/00 (2006.01) *B01J 8/00* (2006.01)
B01J 3/03 (2006.01)

(21) International Application Number:
PCT/US2023/067677

(22) International Filing Date:
31 May 2023 (31.05.2023)

(25) Filing Language: English

(26) Publication Language: English

(30) Priority Data:
63/347,630 01 June 2022 (01.06.2022) US

(71) Applicant *(for US only)*: **SHELL USA, INC.** [US/US]; P.O. BOX 576, Houston, Texas 77001-0576 (US).

(71) Applicant *(for all designated States except US)*: **SHELL INTERNATIONALE RESEARCH MAATSCHAPPIJ B.V.** [NL/NL]; Carel van Bylandtlaan 30, NL-2596 The Hague (NL).

(72) Inventors: **KOCH, Thomas**; Masnedøvej 53, 4760 Vordingborg, CPR 0703610285 (DK). **JANCKER, Steffen**; Grasweg 31, 1031HW Amsterdam (NL). **VAN ELBURG, Gerhard Johan**; Grasweg 31, 1031HW Amsterdam (NL). **CHEN, Zhong Xin**; 7th Floor, 9 North Buona Vista Drive, The Metropolis Tower 1, 138588 (SG).

(74) Agent: **REYES, Priscilla T.**; SHELL USA, INC., P.O. BOX 576, Houston, Texas 832-337-9742 (US).

(81) Designated States *(unless otherwise indicated, for every kind of national protection available)*: AE, AG, AL, AM, AO, AT, AU, AZ, BA, BB, BG, BH, BN, BR, BW, BY, BZ, CA, CH, CL, CN, CO, CR, CU, CV, CZ, DE, DJ, DK, DM, DO, DZ, EC, EE, EG, ES, FI, GB, GD, GE, GH, GM, GT, HN, HR, HU, ID, IL, IN, IQ, IR, IS, IT, JM, JO, JP, KE, KG, KH, KN, KP, KR, KW, KZ, LA, LC, LK, LR, LS, LU, LY, MA, MD, MG, MK, MN, MU, MW, MX, MY, MZ, NA, NG, NI, NO, NZ, OM, PA, PE, PG, PH, PL, PT, QA, RO, RS, RU, RW, SA, SC, SD, SE, SG, SK, SL, ST, SV, SY, TH, TJ, TM, TN, TR, TT, TZ, UA, UG, US, UZ, VC, VN, WS, ZA, ZM, ZW.

(84) Designated States *(unless otherwise indicated, for every kind of regional protection available)*: ARIPO (BW, CV, GH, GM, KE, LR, LS, MW, MZ, NA, RW, SC, SD, SL, ST, SZ, TZ, UG, ZM, ZW), Eurasian (AM, AZ, BY, KG, KZ, RU, TJ, TM), European (AL, AT, BE, BG, CH, CY, CZ, DE, DK, EE, ES, FI, FR, GB, GR, HR, HU, IE, IS, IT, LT, LU, LV, MC, ME, MK, MT, NL, NO, PL, PT, RO, RS, SE, SI, SK, SM, TR), OAPI (BF, BJ, CF, CG, CI, CM, GA, GN, GQ, GW, KM, ML, MR, NE, SN, TD, TG).

(54) Title: FEEDSTOCK FEEDER SYSTEM

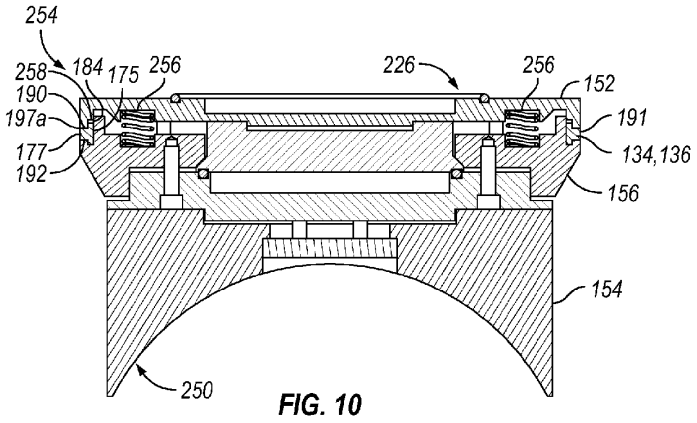

FIG. 10

(57) Abstract: A piston having a chamber and a barrel disposed in and that may translocate within the chamber. The barrel includes a terminal end having a seal, and the seal has an annular ring having a first wall and a second wall, the second wall is orthogonal to and extends from the first wall such that a first portion of the first wall protrudes away from the second wall in a first direction and a second portion of the first wall protrudes away from the second wall in a second direction that is substantially opposite to the first direction.

WO 2023/235742 A1

[Continued on next page]

Published:

— *with international search report (Art. 21(3))*

— *before the expiration of the time limit for amending the claims and to be republished in the event of receipt of amendments (Rule 48.2(h))*