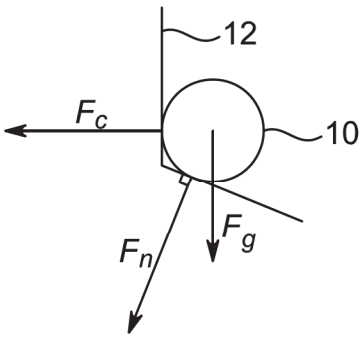

FIG. 1A

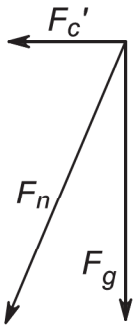

FIG. 1B

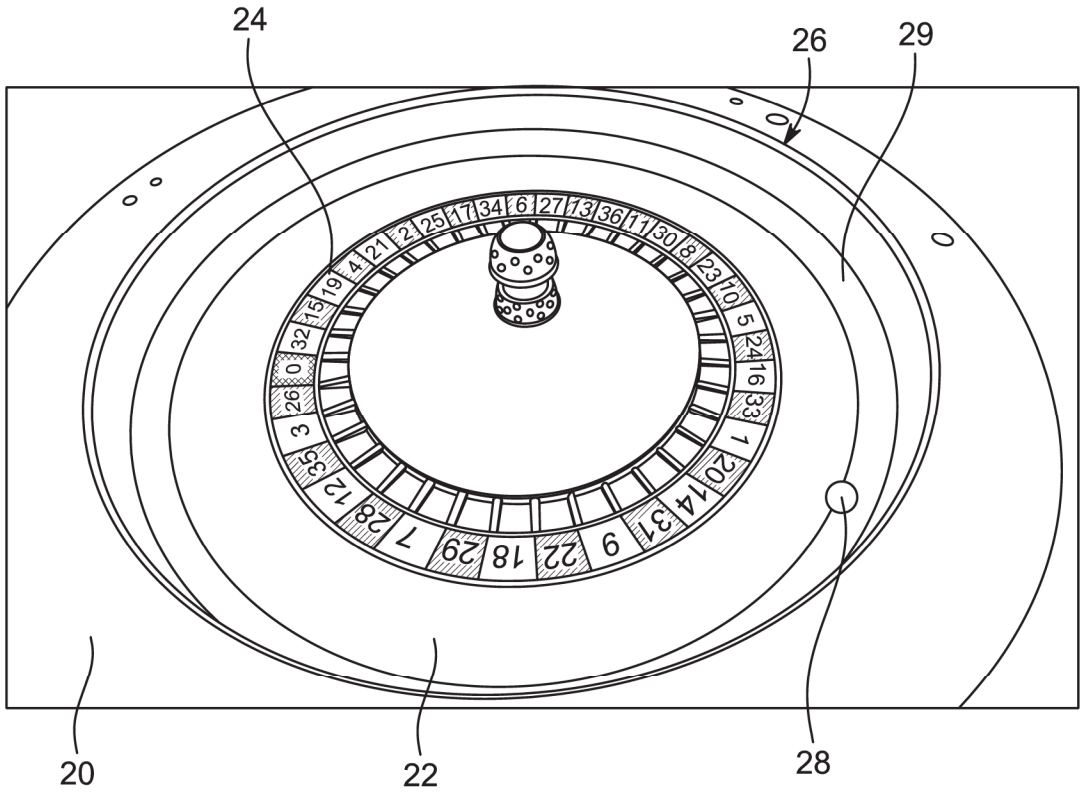

FIG. 2

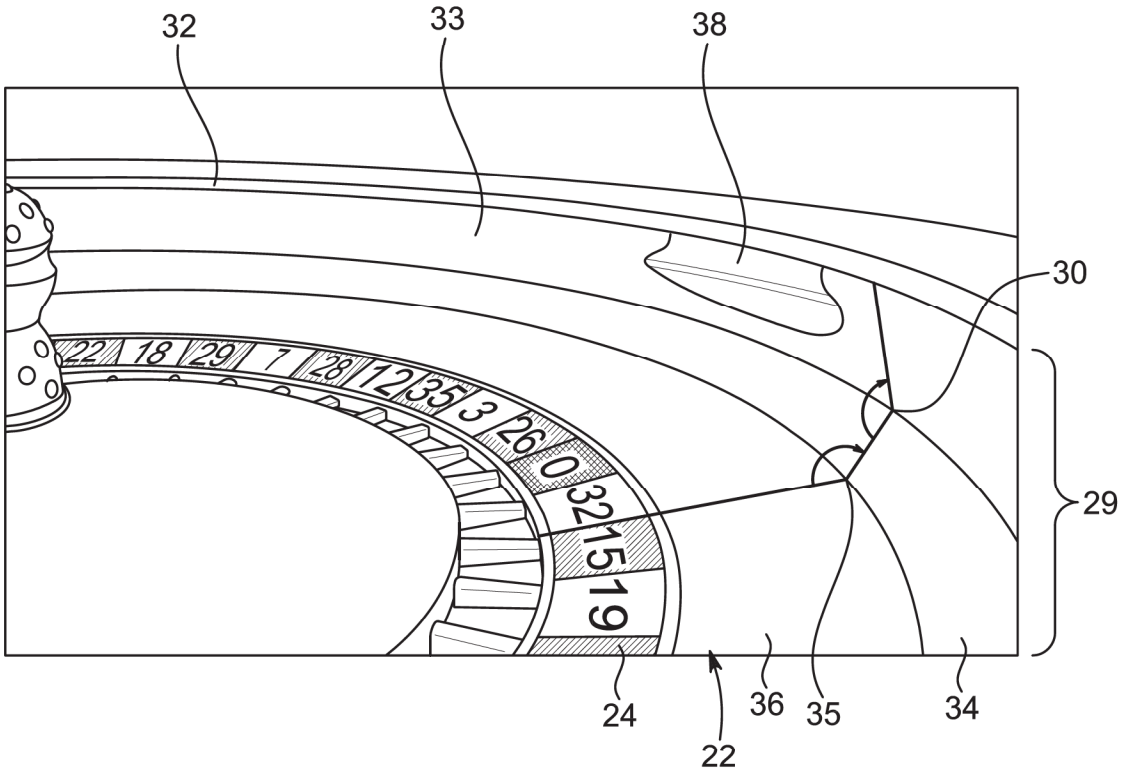
32
33
38
30
29
22
18
29
7
28
12
35
3
26
0
32
15
19
24
22
36
35
34

FIG. 3

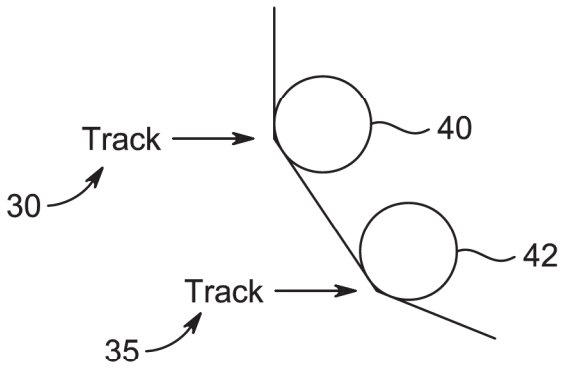
Track
30
40
42
Track
35

FIG. 4A

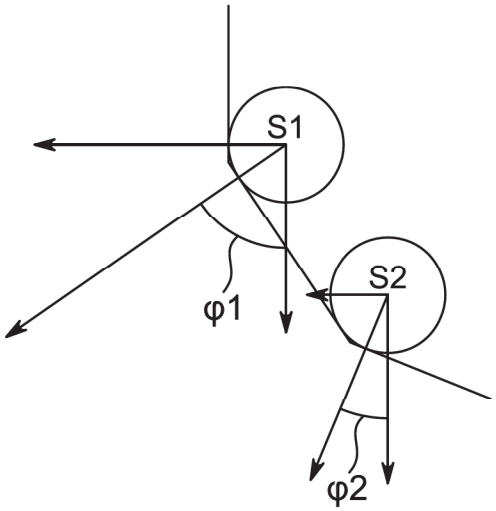

FIG. 4B

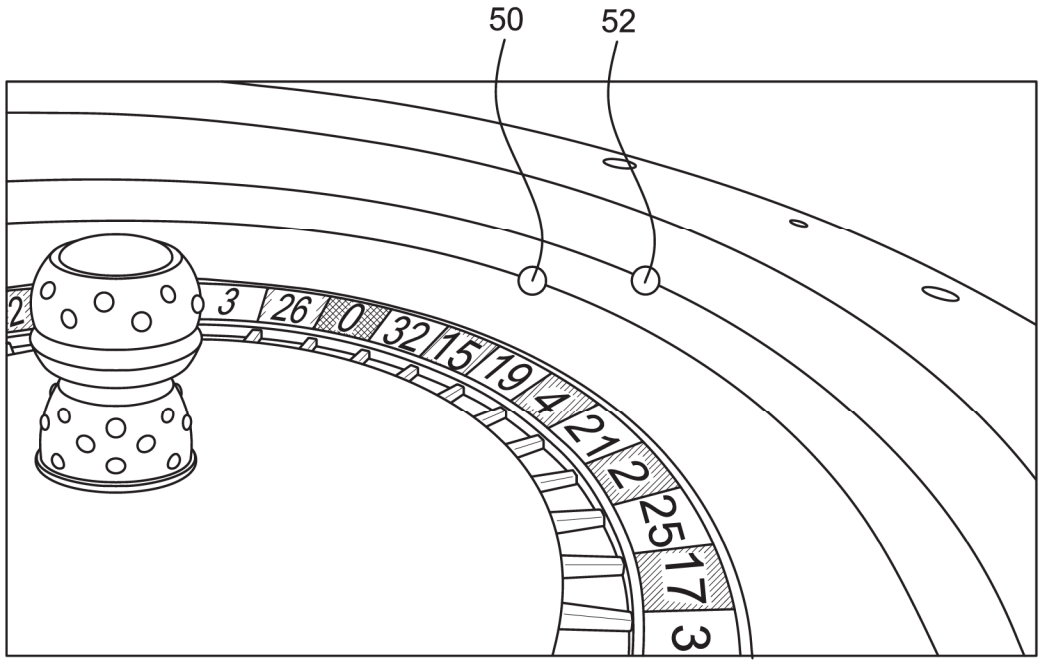

FIG. 5

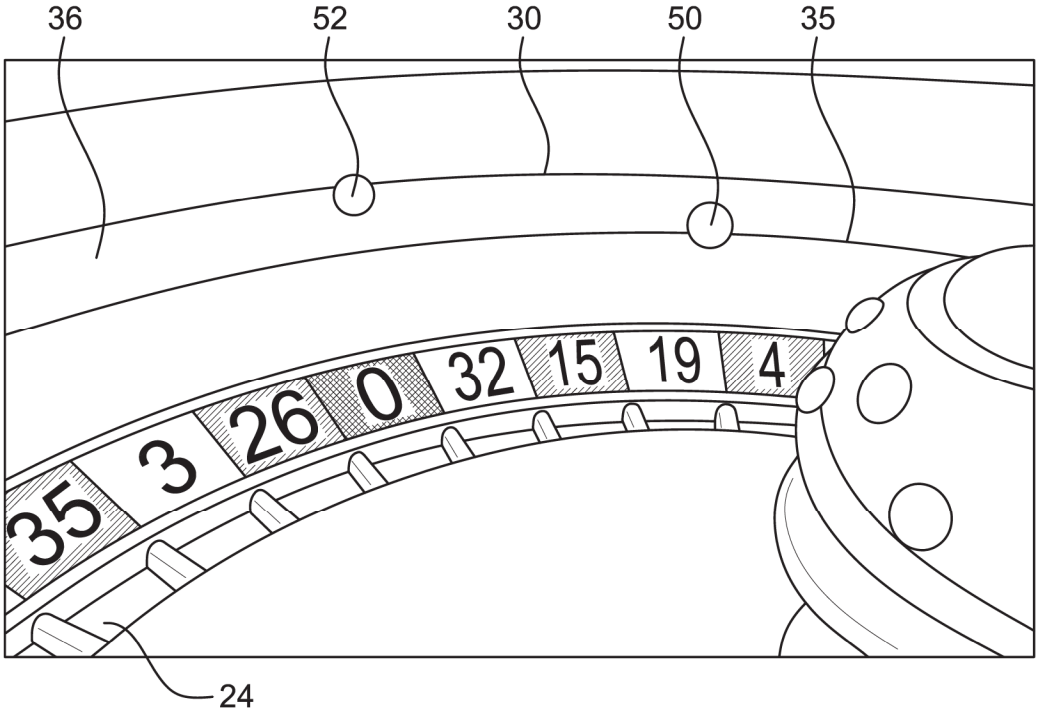
36
52
30
50
35
35
3
26
0
32
15
19
4
24

FIG. 6

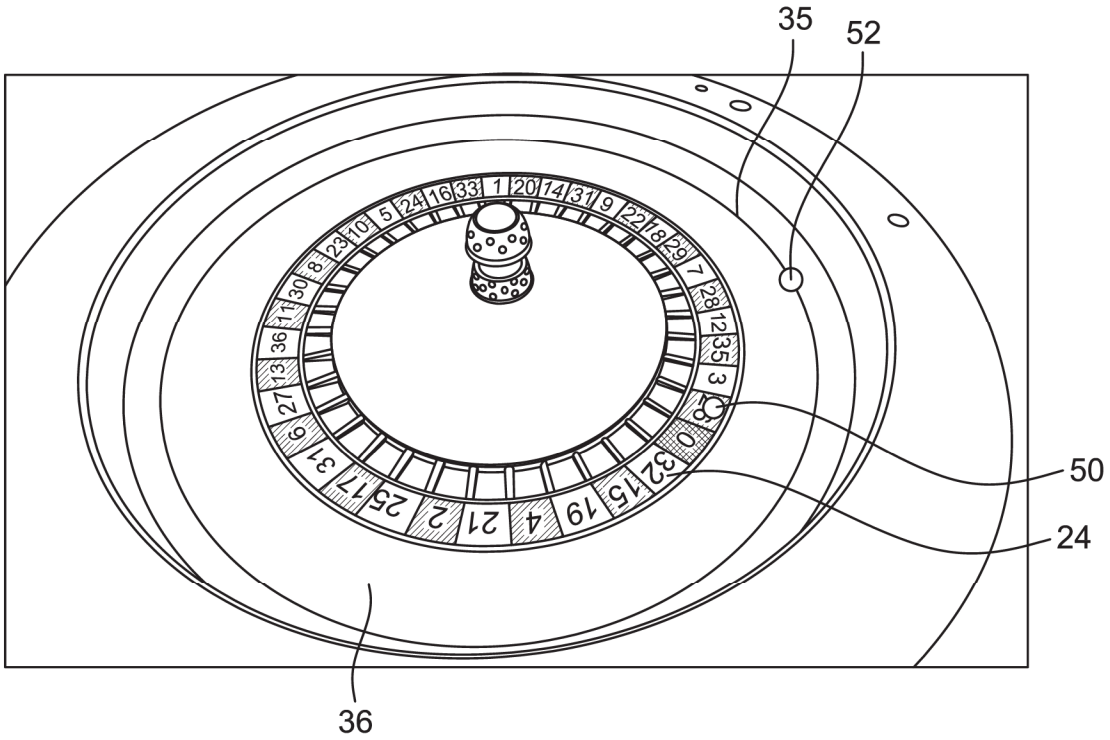
35
52
0
32
15
19
4
21
2
25
17
34
6
27
13
36
11
30
8
23
10
5
24
16
33
1
20
14
31
9
22
18
29
7
28
12
35
3
50
24
36

FIG. 7

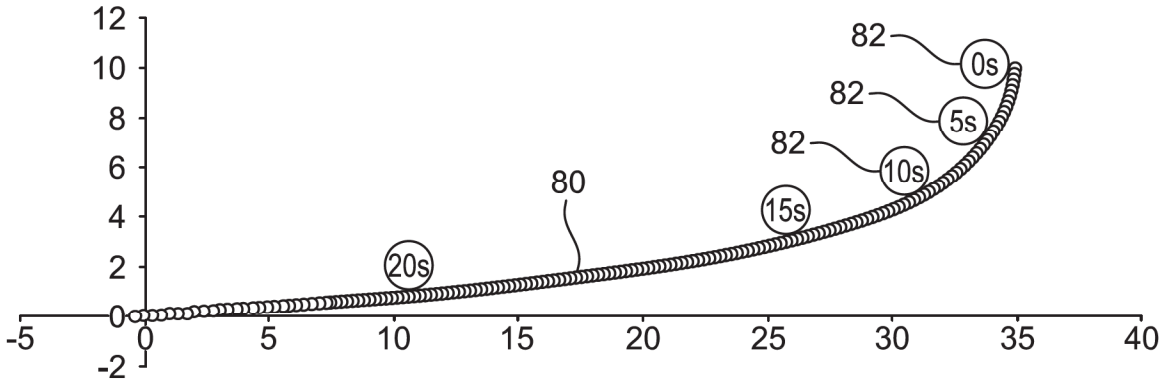
12
10
8
6
4
2
0
-2
-5
0
5
10
15
20
25
30
35
40
82
0s
82
5s
82
10s
80
15s
20s

FIG. 8

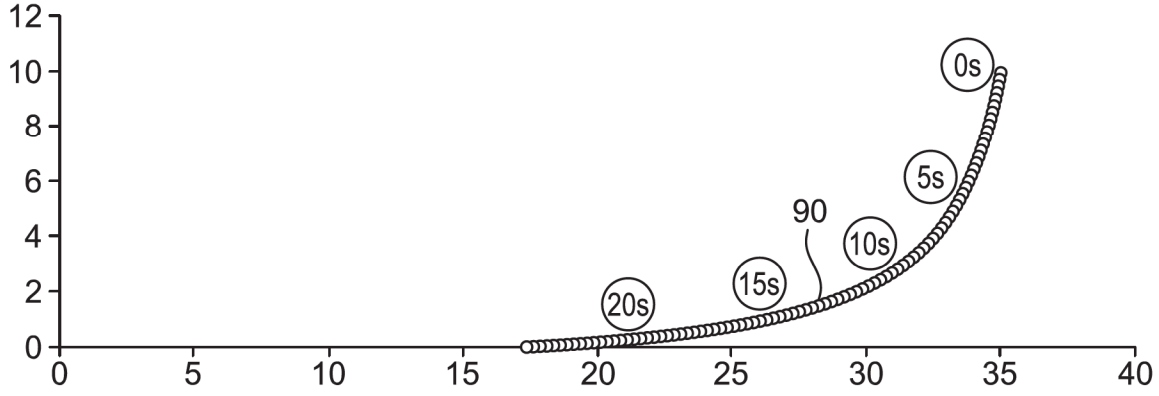
12
10
8
6
4
2
0
0
5
10
15
20
25
30
35
40
0s
5s
90
10s
15s
20s

FIG. 9

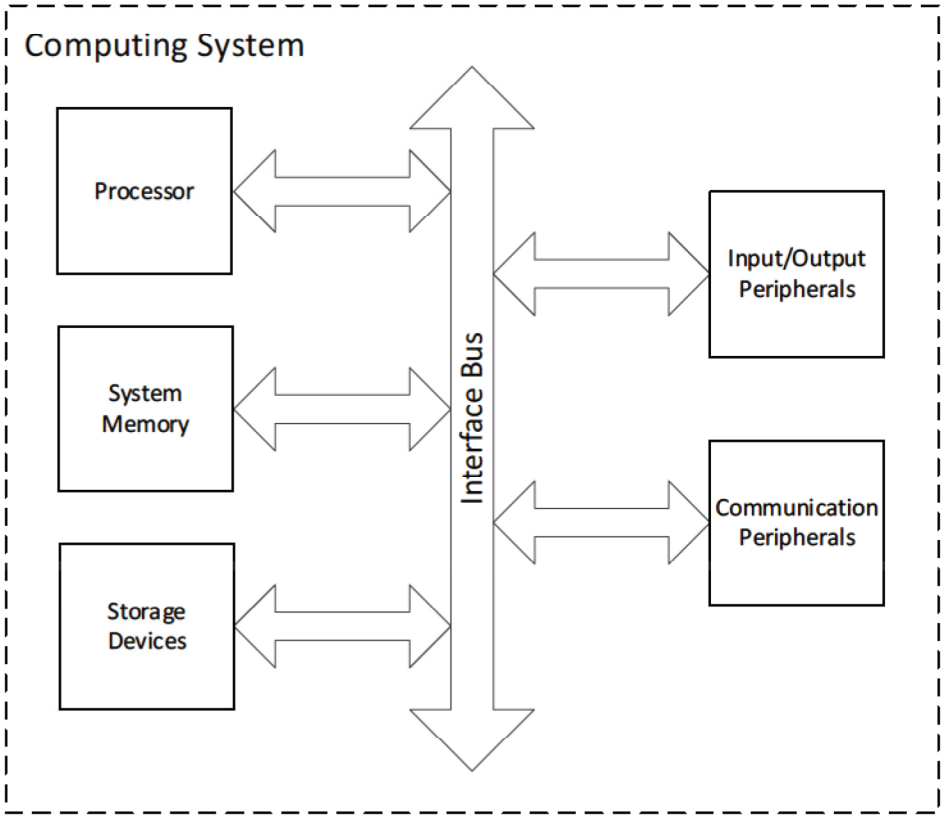
Computing System
Processor
System Memory
Storage Devices
Interface Bus
Input/Output Peripherals
Communication Peripherals

FIG. 10