Fig.1

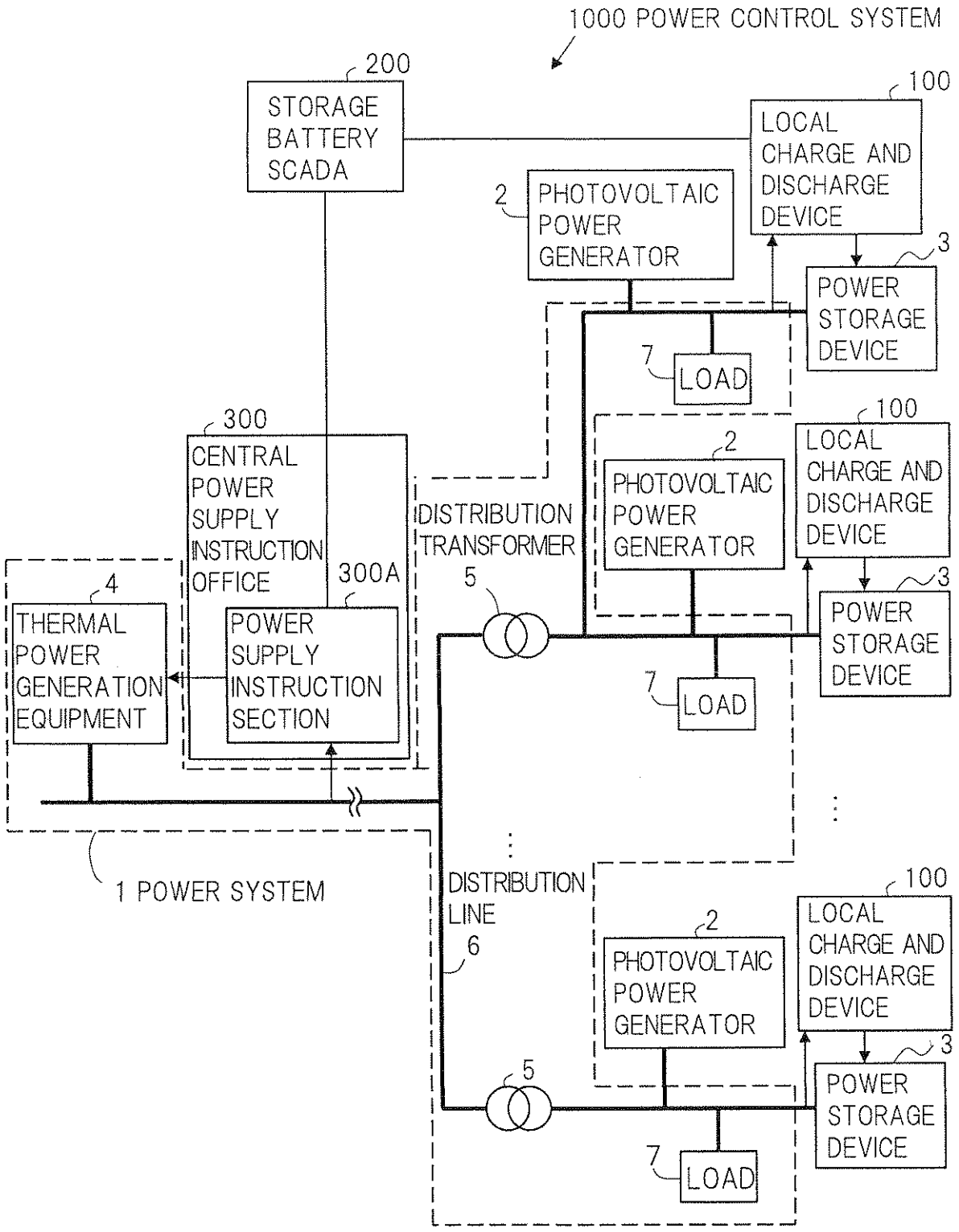
1000 POWER CONTROL SYSTEM
200
STORAGE BATTERY SCADA
100
LOCAL CHARGE AND DISCHARGE DEVICE
2
PHOTOVOLTAIC POWER GENERATOR
3
POWER STORAGE DEVICE
7
LOAD
300
CENTRAL POWER SUPPLY INSTRUCTION OFFICE
300A
POWER SUPPLY INSTRUCTION SECTION
4
THERMAL POWER GENERATION EQUIPMENT
DISTRIBUTION TRANSFORMER
5
DISTRIBUTION LINE
6
1 POWER SYSTEM

Fig.2

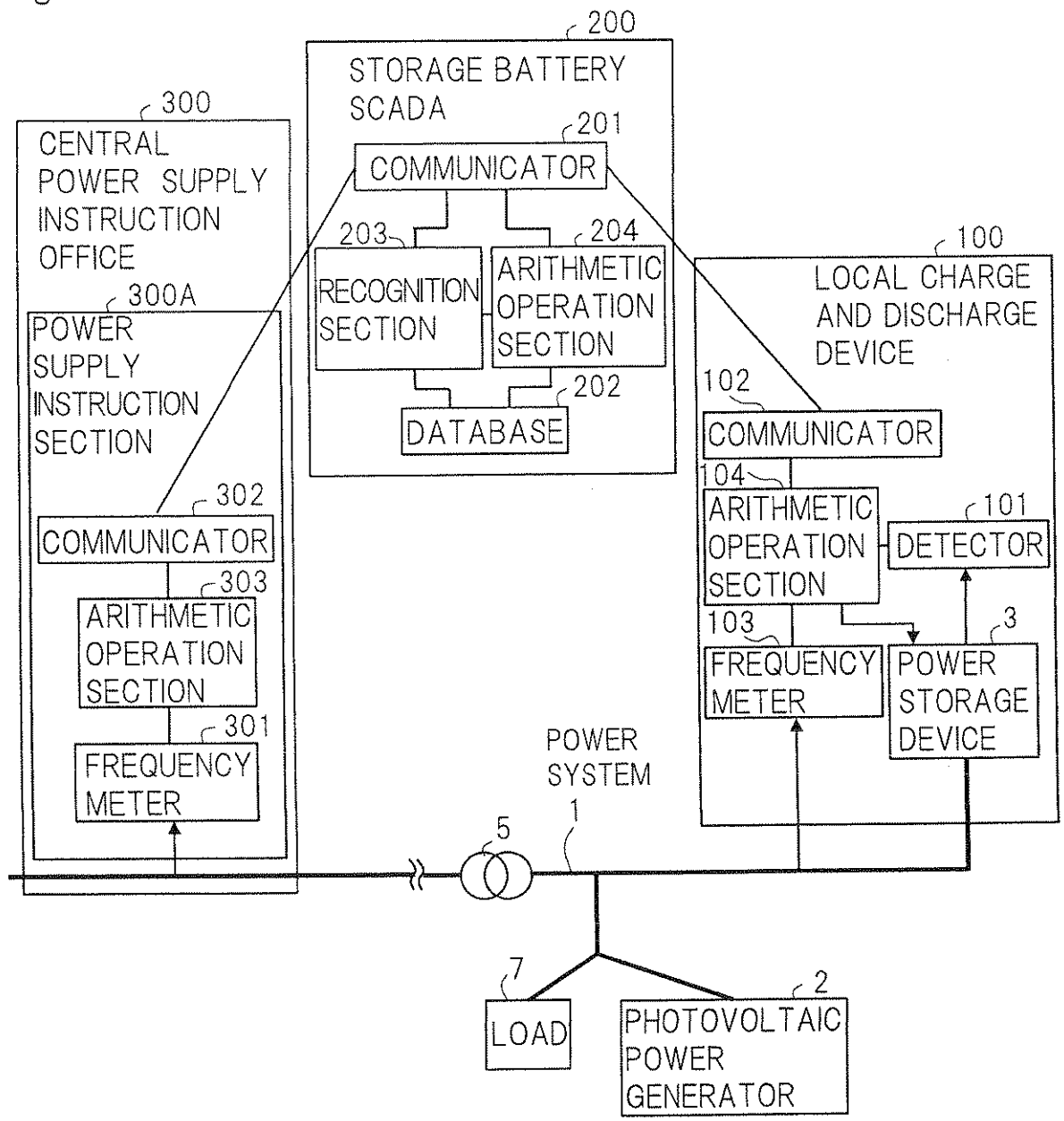
200
STORAGE BATTERY SCADA
201
COMMUNICATOR
203
RECOGNITION SECTION
204
ARITHMETIC OPERATION SECTION
202
DATABASE
300
CENTRAL POWER SUPPLY INSTRUCTION OFFICE
300A
POWER SUPPLY INSTRUCTION SECTION
302
COMMUNICATOR
303
ARITHMETIC OPERATION SECTION
301
FREQUENCY METER
100
LOCAL CHARGE AND DISCHARGE DEVICE
102
COMMUNICATOR
104
ARITHMETIC OPERATION SECTION
101
DETECTOR
103
FREQUENCY METER
3
POWER STORAGE DEVICE
POWER SYSTEM
1
5
7
LOAD
2
PHOTOVOLTAIC POWER GENERATOR

Fig.3A

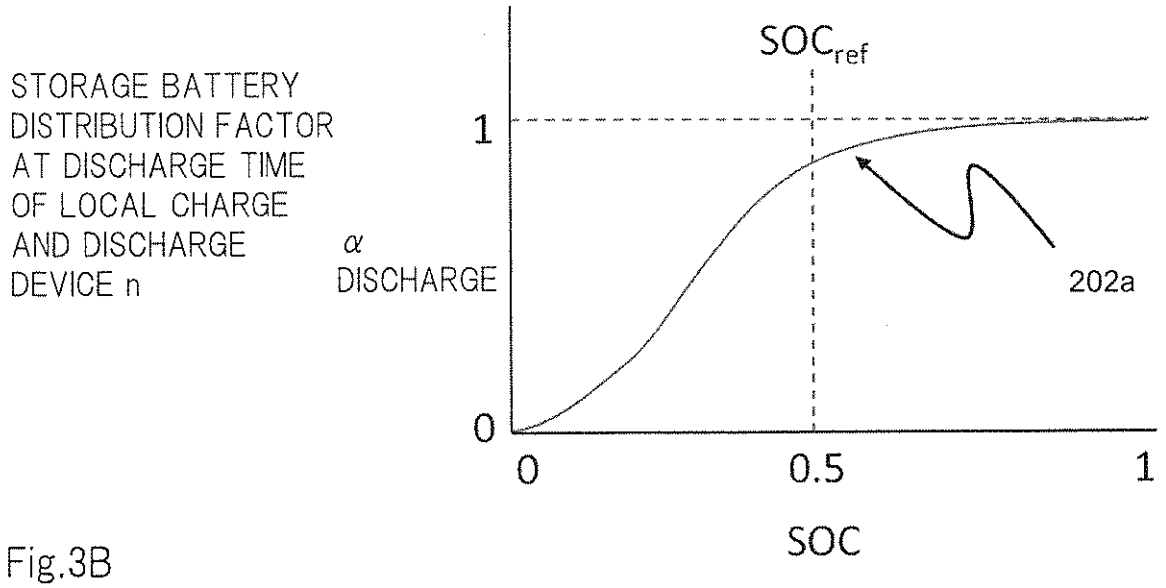
STORAGE BATTERY DISTRIBUTION FACTOR AT DISCHARGE TIME OF LOCAL CHARGE AND DISCHARGE DEVICE n
α DISCHARGE
SOC$_{ref}$
1
0
0
0.5
1
SOC
202a

Fig.3B

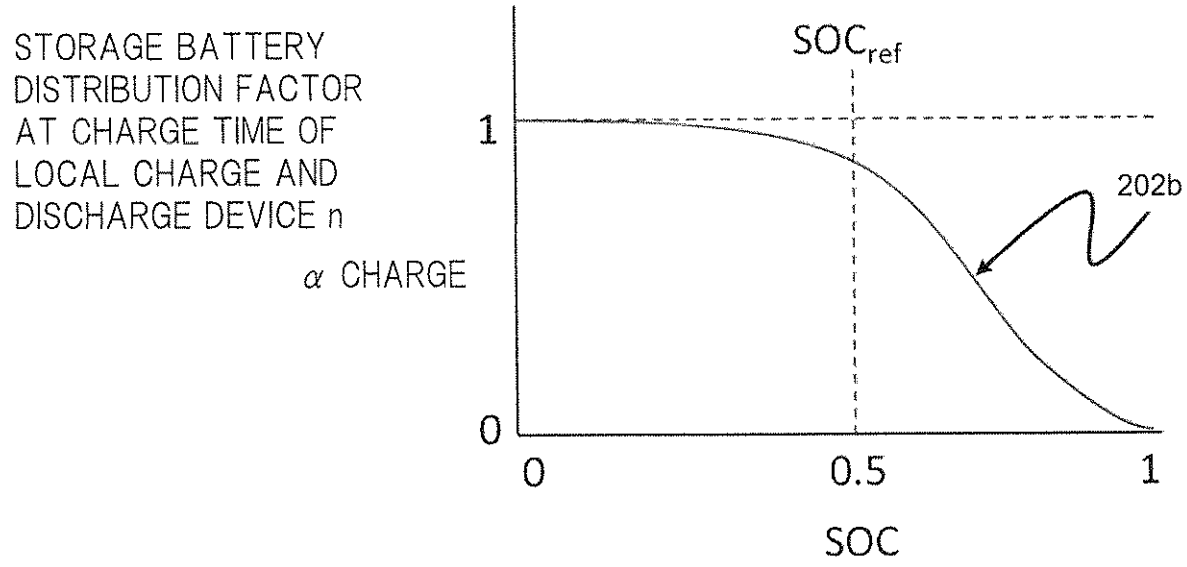
STORAGE BATTERY DISTRIBUTION FACTOR AT CHARGE TIME OF LOCAL CHARGE AND DISCHARGE DEVICE n
α CHARGE
SOC$_{ref}$
1
0
0
0.5
1
SOC
202b

Fig.4



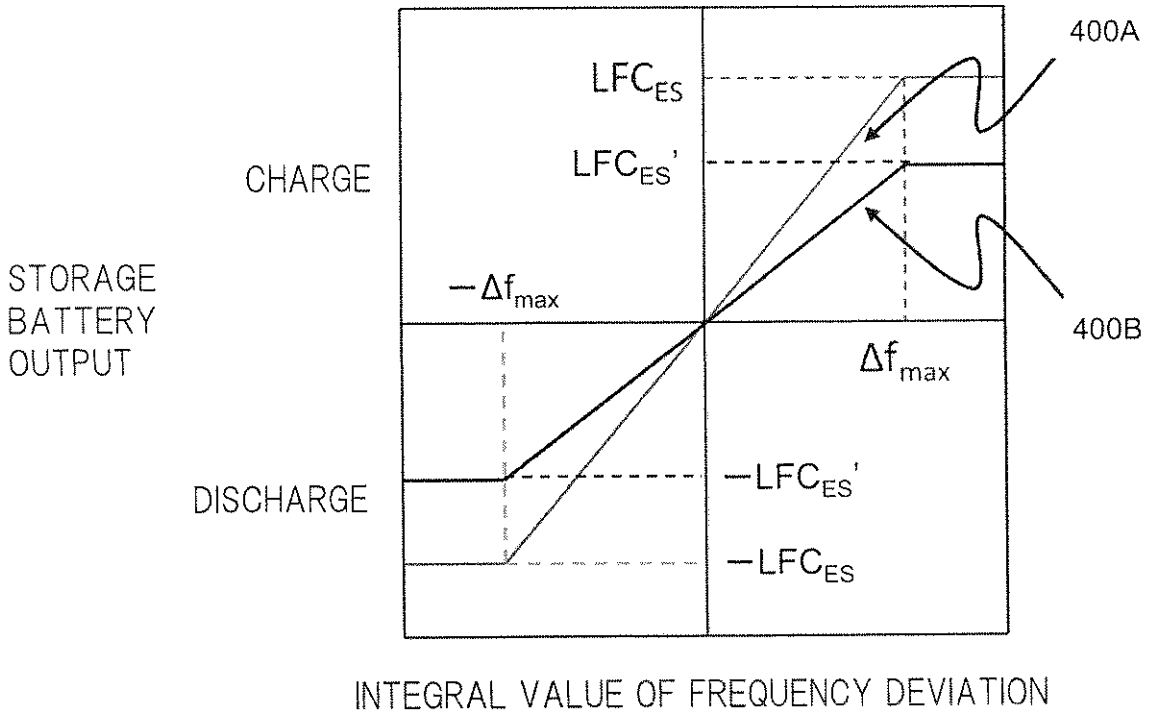
400A
LFC$_{ES}$
LFC$_{ES}$'
CHARGE
STORAGE
BATTERY
OUTPUT
$-\Delta f_{max}$
400B
$\Delta f_{max}$
DISCHARGE
$-$LFC$_{ES}$'
$-$LFC$_{ES}$
INTEGRAL VALUE OF FREQUENCY DEVIATION

Fig.5

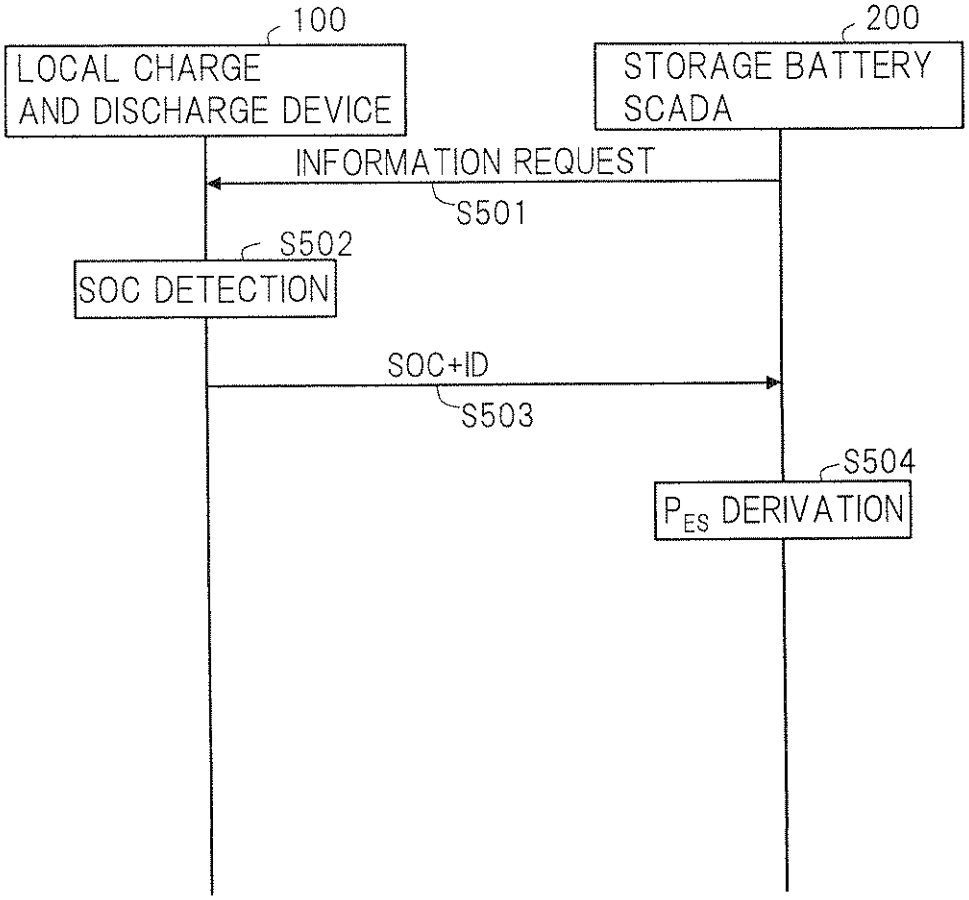
100
LOCAL CHARGE AND DISCHARGE DEVICE
200
STORAGE BATTERY SCADA
INFORMATION REQUEST
S501
S502
SOC DETECTION
SOC+ID
S503
S504
$P_{ES}$ DERIVATION

Fig.6



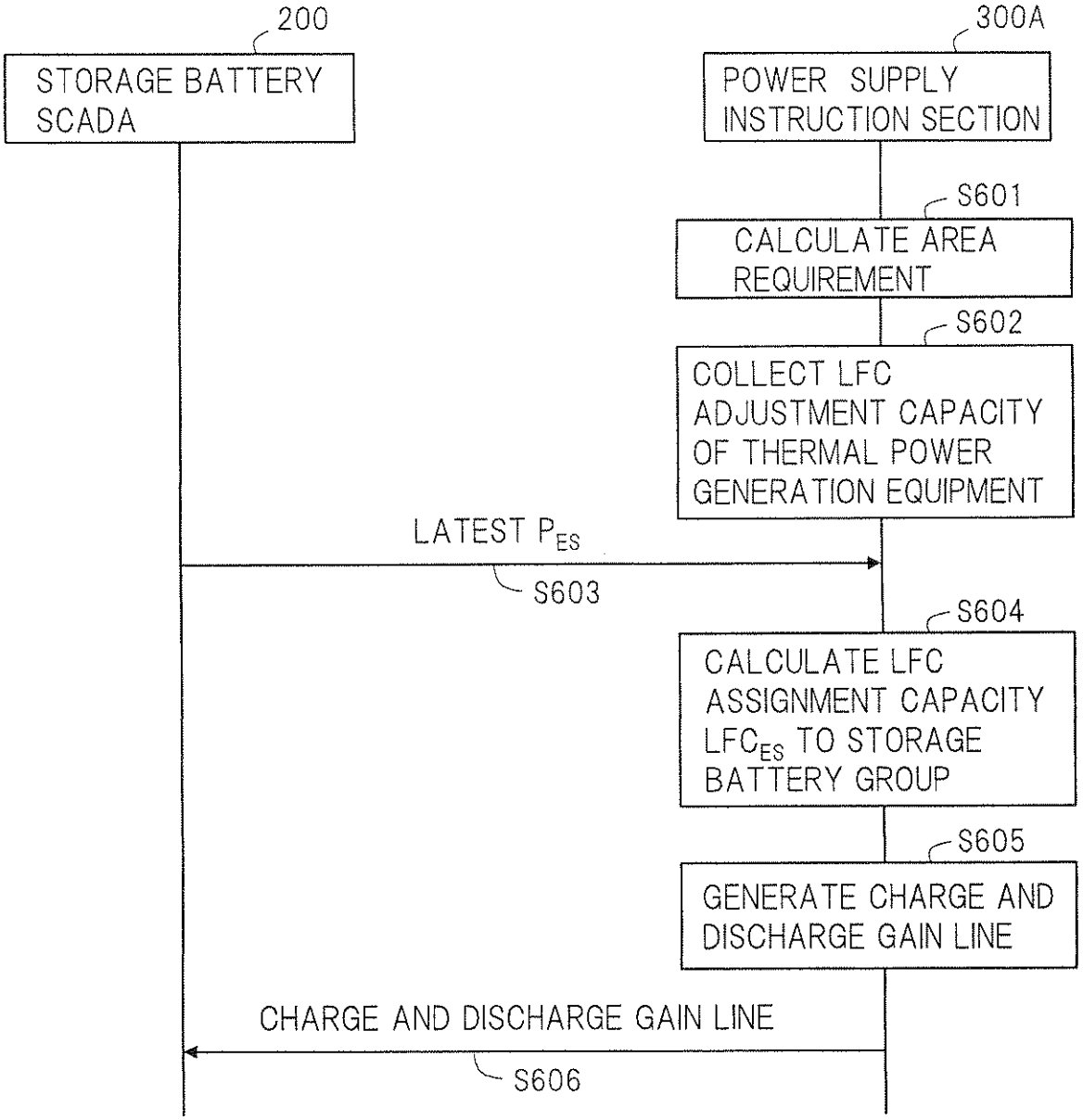
200
STORAGE BATTERY SCADA
300A
POWER SUPPLY INSTRUCTION SECTION
S601
CALCULATE AREA REQUIREMENT
S602
COLLECT LFC ADJUSTMENT CAPACITY OF THERMAL POWER GENERATION EQUIPMENT
LATEST $P_{ES}$
S603
S604
CALCULATE LFC ASSIGNMENT CAPACITY $LFC_{ES}$ TO STORAGE BATTERY GROUP
S605
GENERATE CHARGE AND DISCHARGE GAIN LINE
CHARGE AND DISCHARGE GAIN LINE
S606

Fig.7

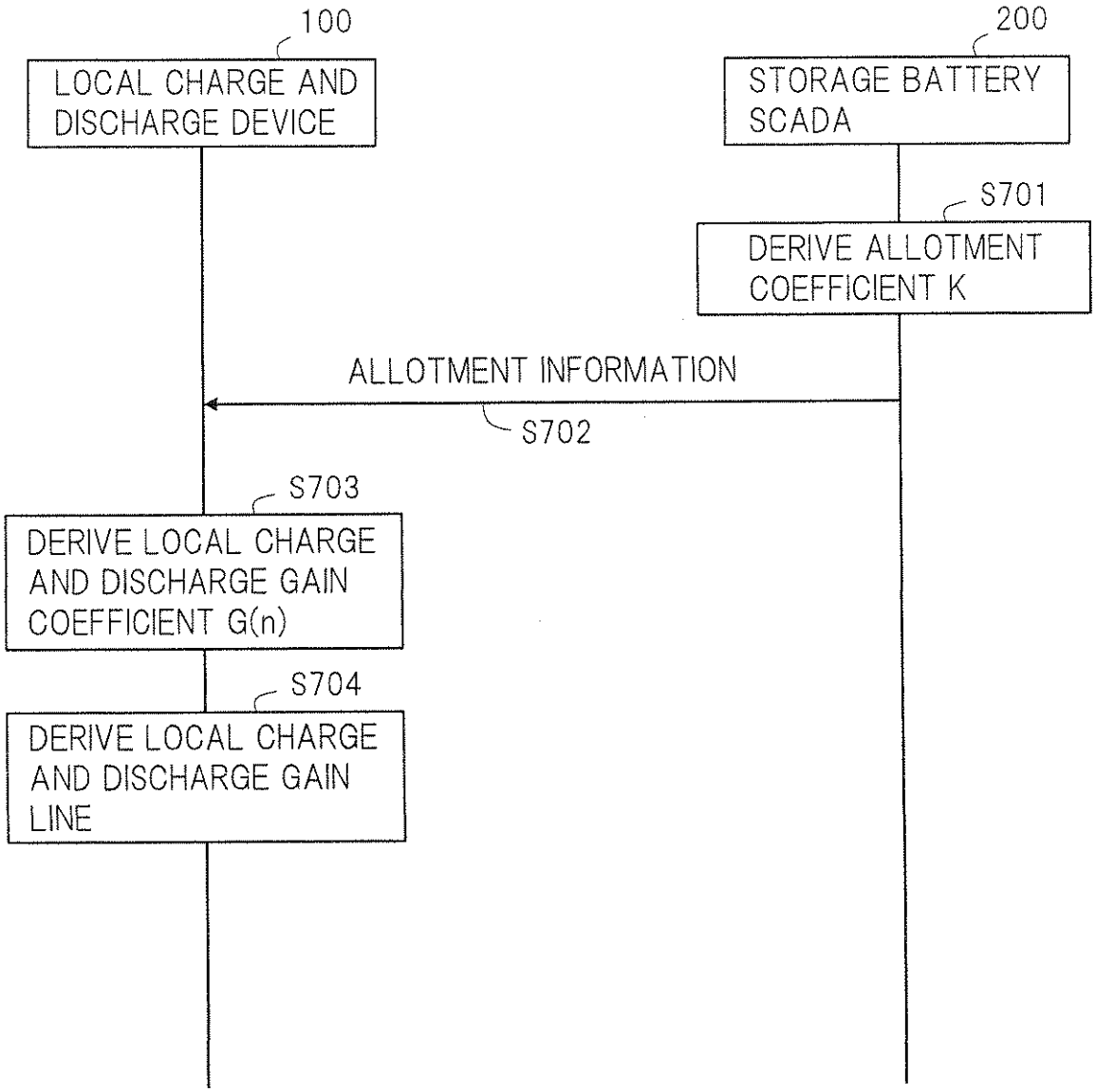
100
LOCAL CHARGE AND DISCHARGE DEVICE
200
STORAGE BATTERY SCADA
S701
DERIVE ALLOTMENT COEFFICIENT K
ALLOTMENT INFORMATION
S702
S703
DERIVE LOCAL CHARGE AND DISCHARGE GAIN COEFFICIENT G(n)
S704
DERIVE LOCAL CHARGE AND DISCHARGE GAIN LINE

Fig.8

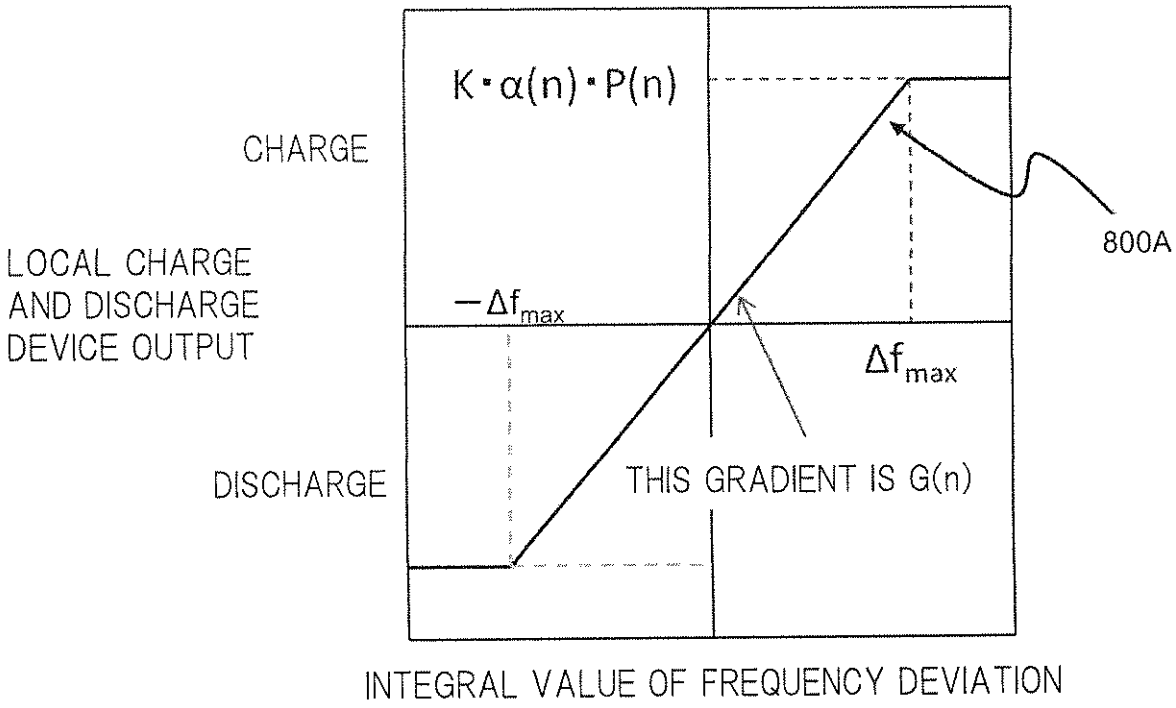
K・α(n)・P(n)
CHARGE
LOCAL CHARGE AND DISCHARGE DEVICE OUTPUT
−Δf max
Δf max
DISCHARGE
THIS GRADIENT IS G(n)
800A
INTEGRAL VALUE OF FREQUENCY DEVIATION

Fig.9

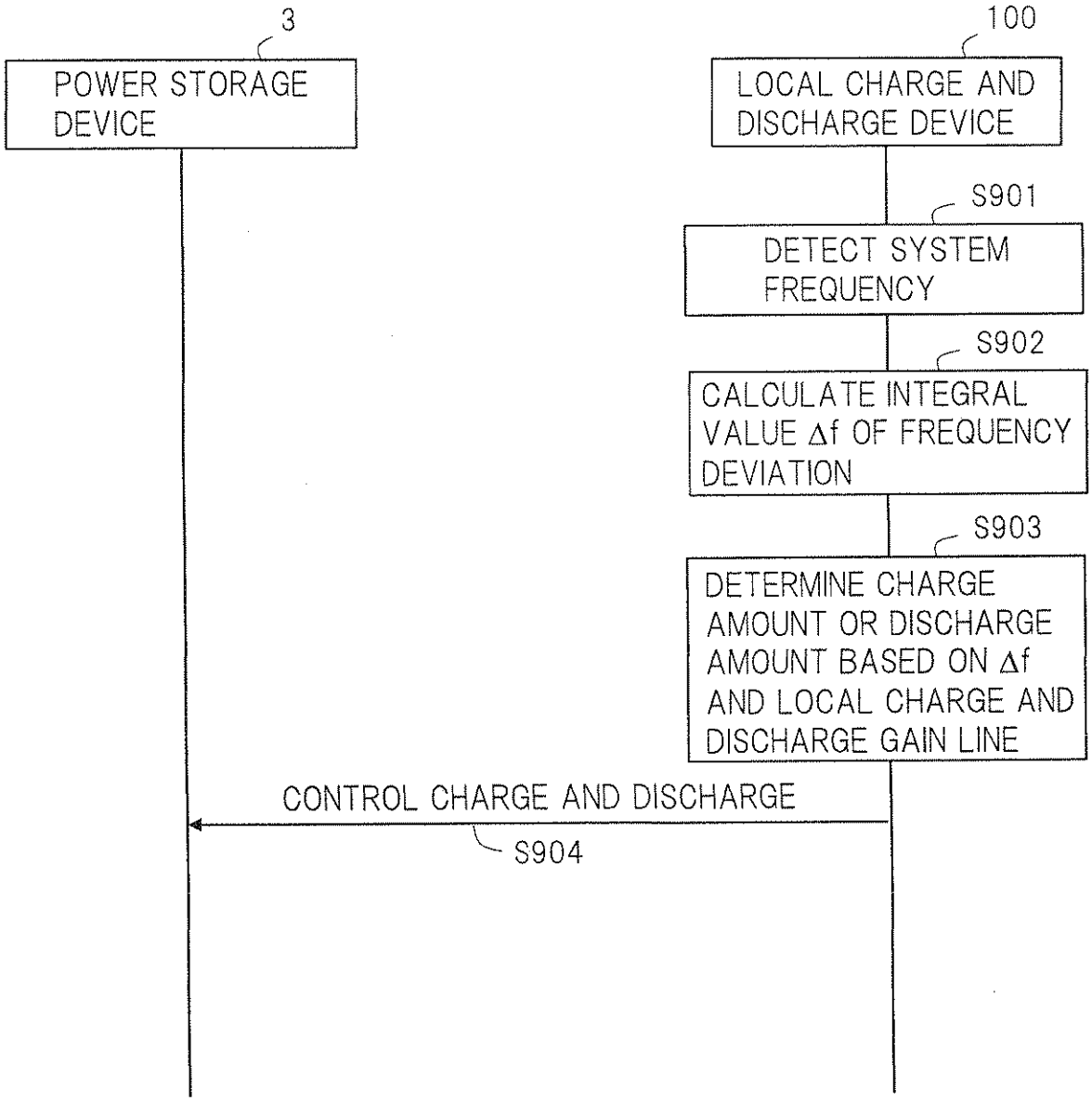
3
POWER STORAGE DEVICE
100
LOCAL CHARGE AND DISCHARGE DEVICE
S901
DETECT SYSTEM FREQUENCY
S902
CALCULATE INTEGRAL VALUE Δf OF FREQUENCY DEVIATION
S903
DETERMINE CHARGE AMOUNT OR DISCHARGE AMOUNT BASED ON Δf AND LOCAL CHARGE AND DISCHARGE GAIN LINE
CONTROL CHARGE AND DISCHARGE
S904

Fig.10

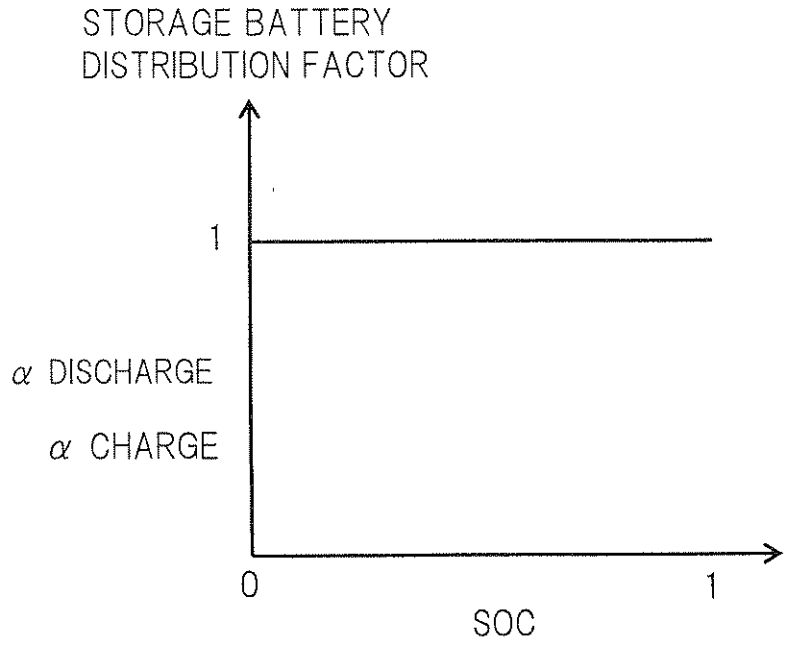
STORAGE BATTERY
DISTRIBUTION FACTOR
1
α DISCHARGE
α CHARGE
0
1
SOC

Fig.11

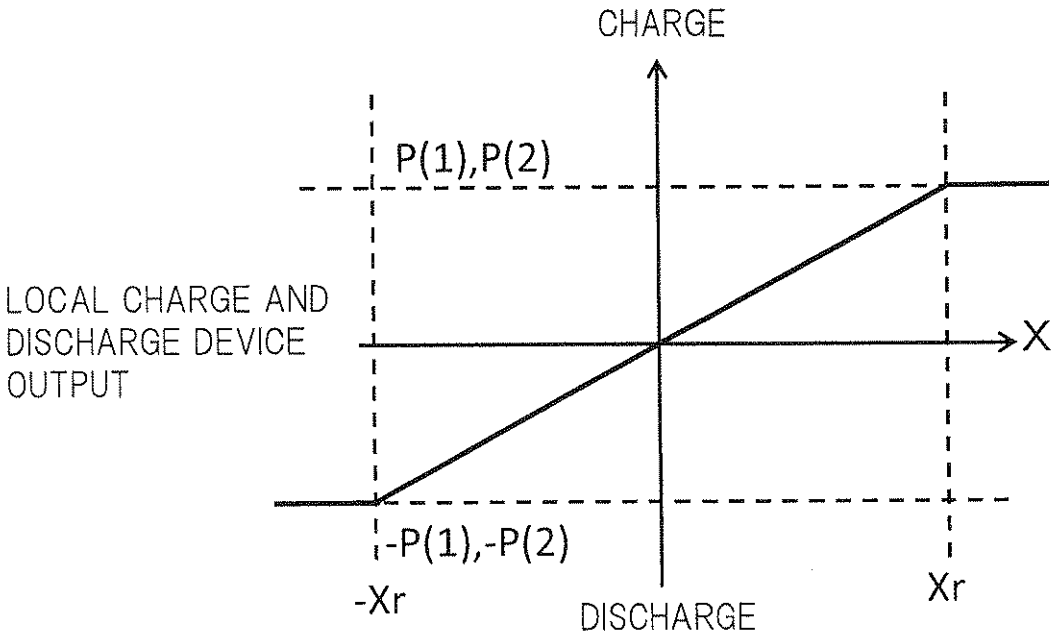
CHARGE
P(1),P(2)
LOCAL CHARGE AND
DISCHARGE DEVICE
OUTPUT
X
-P(1),-P(2)
-Xr
Xr
DISCHARGE

Fig.12

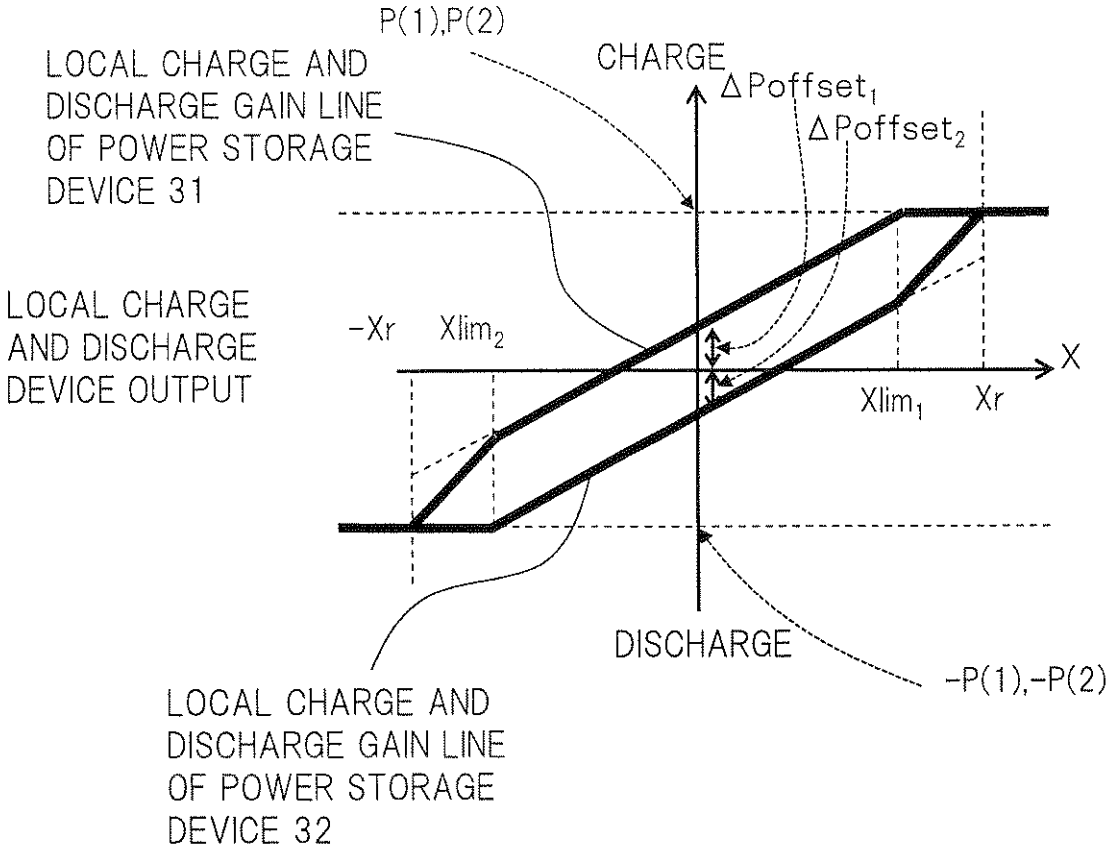
P(1),P(2)
CHARGE
LOCAL CHARGE AND DISCHARGE GAIN LINE OF POWER STORAGE DEVICE 31
ΔPoffset1
ΔPoffset2
LOCAL CHARGE AND DISCHARGE DEVICE OUTPUT
-Xr
Xlim2
X
Xlim1
Xr
DISCHARGE
-P(1),-P(2)
LOCAL CHARGE AND DISCHARGE GAIN LINE OF POWER STORAGE DEVICE 32

Fig.13

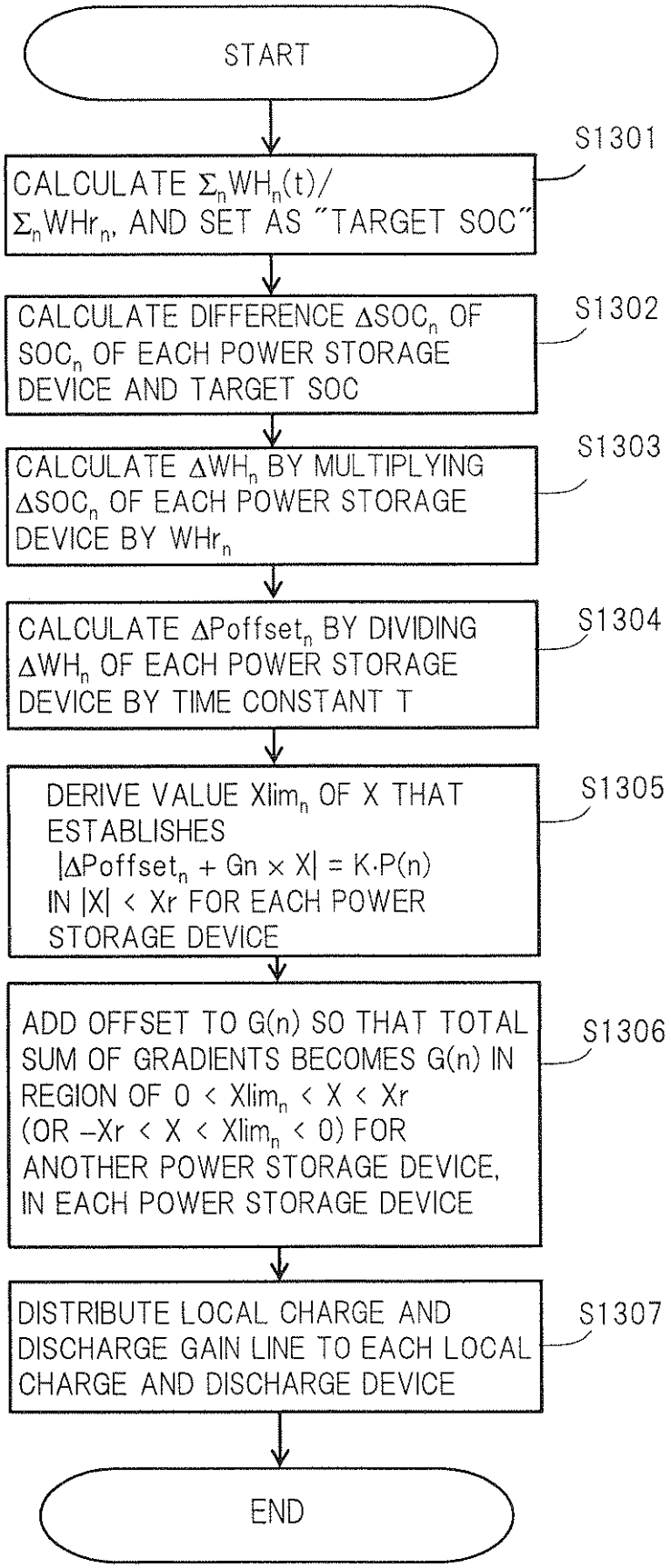
START
S1301
CALCULATE $\Sigma_n WH_n(t)/\Sigma_n WHr_n$, AND SET AS "TARGET SOC"
S1302
CALCULATE DIFFERENCE $\Delta SOC_n$ OF $SOC_n$ OF EACH POWER STORAGE DEVICE AND TARGET SOC
S1303
CALCULATE $\Delta WH_n$ BY MULTIPLYING $\Delta SOC_n$ OF EACH POWER STORAGE DEVICE BY $WHr_n$
S1304
CALCULATE $\Delta Poffset_n$ BY DIVIDING $\Delta WH_n$ OF EACH POWER STORAGE DEVICE BY TIME CONSTANT T
S1305
DERIVE VALUE $Xlim_n$ OF X THAT ESTABLISHES $|\Delta Poffset_n + Gn \times X| = K \cdot P(n)$ IN $|X| < Xr$ FOR EACH POWER STORAGE DEVICE
S1306
ADD OFFSET TO G(n) SO THAT TOTAL SUM OF GRADIENTS BECOMES G(n) IN REGION OF $0 < Xlim_n < X < Xr$ (OR $-Xr < X < Xlim_n < 0$) FOR ANOTHER POWER STORAGE DEVICE, IN EACH POWER STORAGE DEVICE
S1307
DISTRIBUTE LOCAL CHARGE AND DISCHARGE GAIN LINE TO EACH LOCAL CHARGE AND DISCHARGE DEVICE
END

Fig.14

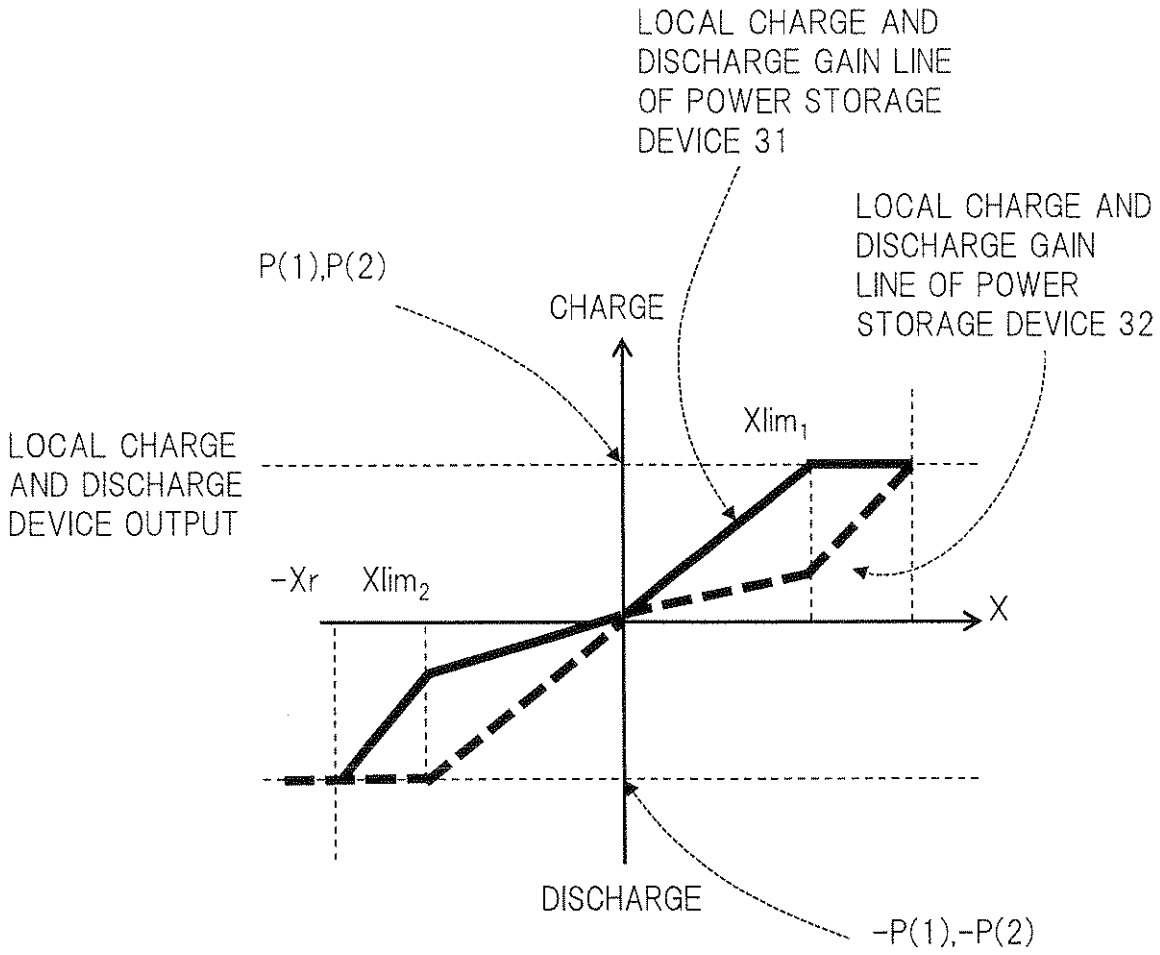
LOCAL CHARGE AND DISCHARGE GAIN LINE OF POWER STORAGE DEVICE 31
LOCAL CHARGE AND DISCHARGE GAIN LINE OF POWER STORAGE DEVICE 32
P(1),P(2)
CHARGE
LOCAL CHARGE AND DISCHARGE DEVICE OUTPUT
Xlim1
-Xr
Xlim2
X
DISCHARGE
-P(1),-P(2)

Fig.15

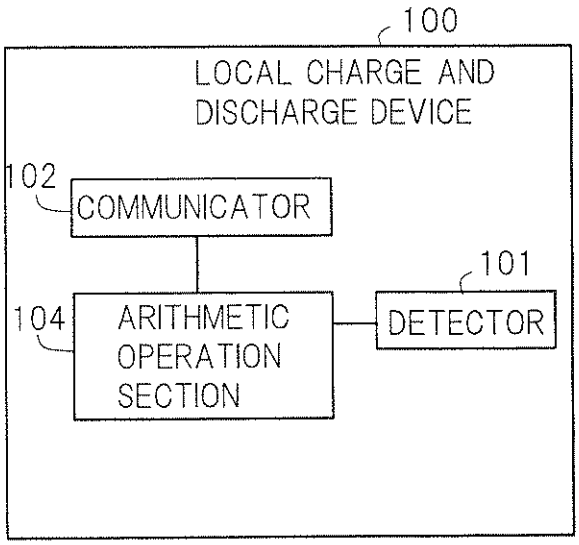
100
LOCAL CHARGE AND DISCHARGE DEVICE
102
COMMUNICATOR
101
104
ARITHMETIC OPERATION SECTION
DETECTOR

Fig.16

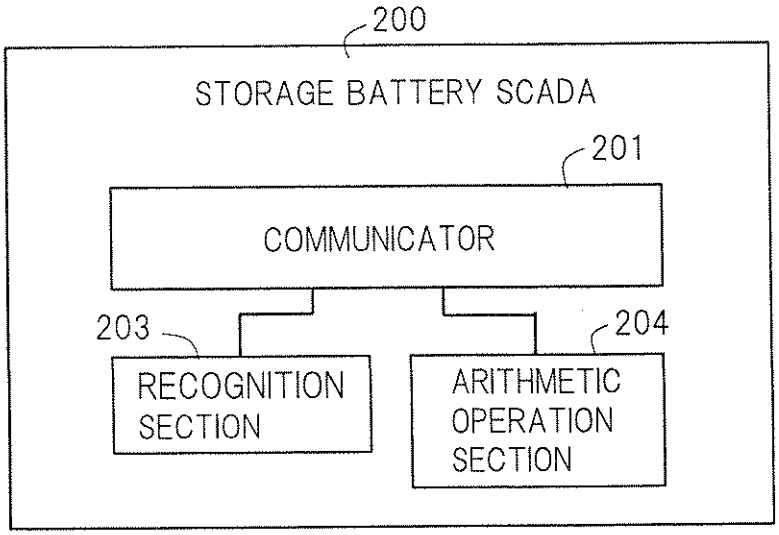
200
STORAGE BATTERY SCADA
201
COMMUNICATOR
203
204
RECOGNITION SECTION
ARITHMETIC OPERATION SECTION

Fig.17

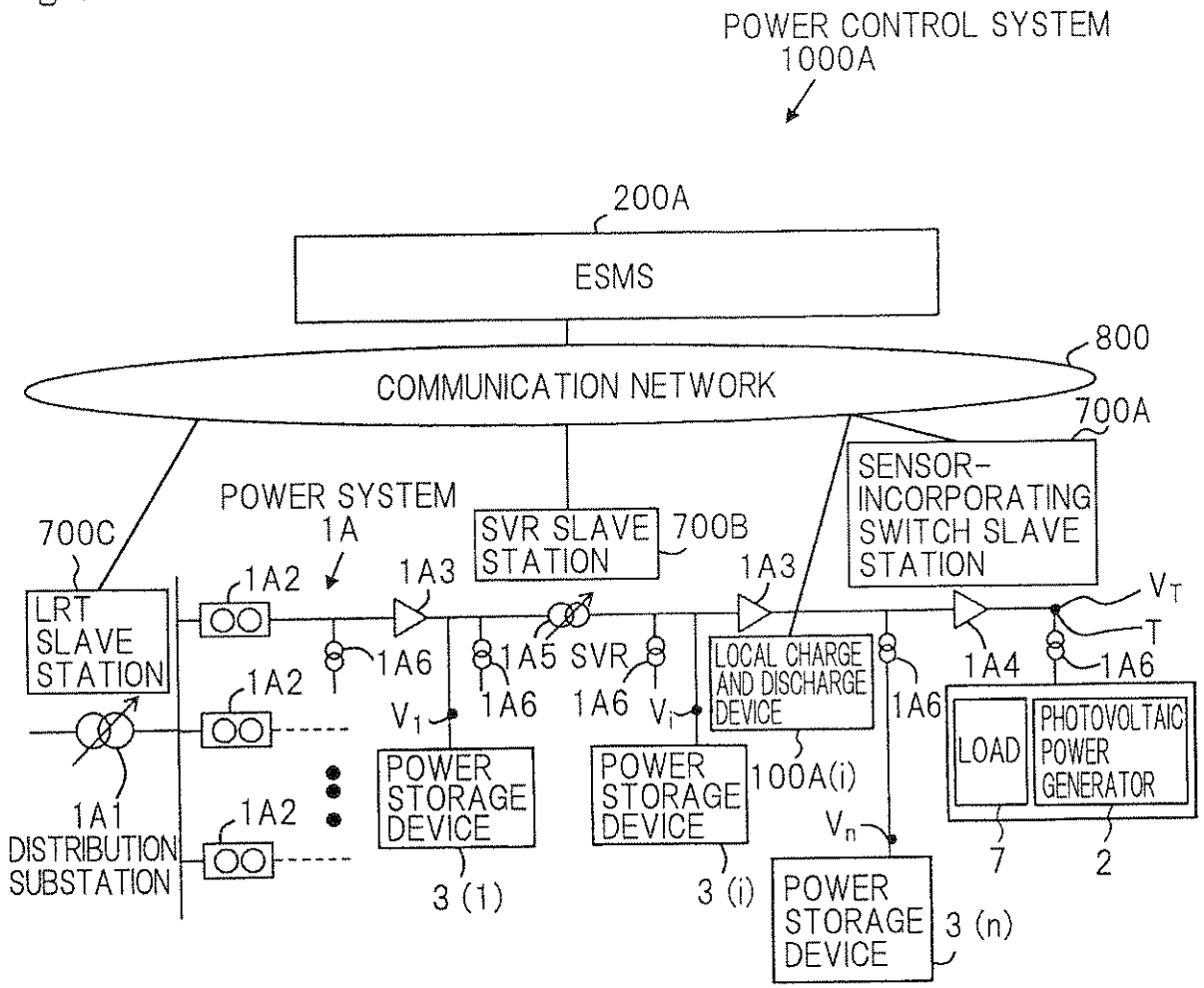
POWER CONTROL SYSTEM
1000A
200A
ESMS
800
COMMUNICATION NETWORK
700A
SENSOR-INCORPORATING SWITCH SLAVE STATION
700C
LRT SLAVE STATION
POWER SYSTEM
1A
SVR SLAVE STATION
700B
1A2
1A3
1A3
$V_T$
T
1A6
1A5 SVR
1A6
1A6
1A4
1A6
1A2
$V_1$
1A6
1A6
$V_i$
LOCAL CHARGE AND DISCHARGE DEVICE
1A6
LOAD
PHOTOVOLTAIC POWER GENERATOR
1A1
DISTRIBUTION SUBSTATION
1A2
POWER STORAGE DEVICE
POWER STORAGE DEVICE
100A(i)
$V_n$
7
2
3 (1)
3 (i)
POWER STORAGE DEVICE
3 (n)

Fig.18

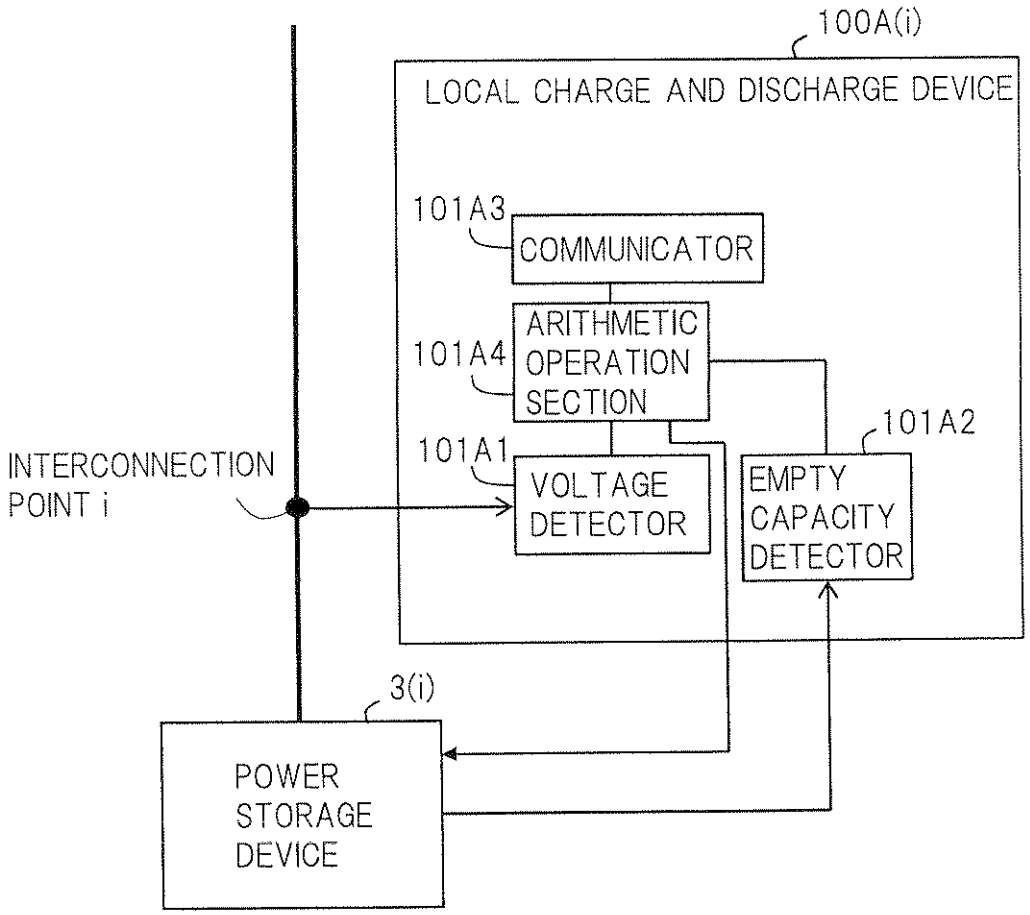
100A(i)
LOCAL CHARGE AND DISCHARGE DEVICE
101A3
COMMUNICATOR
ARITHMETIC OPERATION SECTION
101A4
101A2
101A1
VOLTAGE DETECTOR
EMPTY CAPACITY DETECTOR
INTERCONNECTION POINT i
3(i)
POWER STORAGE DEVICE

Fig.19

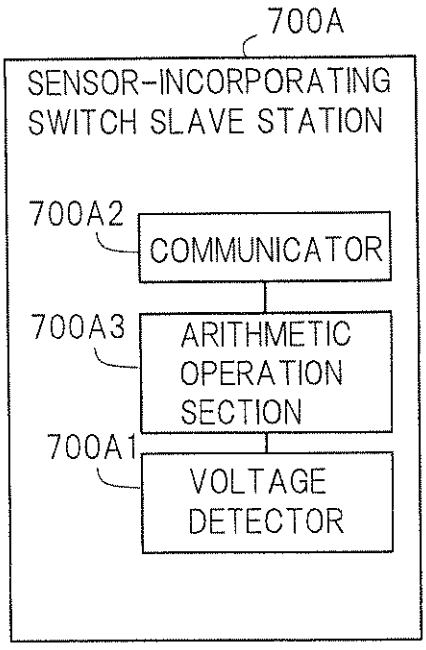
700A
SENSOR-INCORPORATING SWITCH SLAVE STATION
700A2
COMMUNICATOR
700A3
ARITHMETIC OPERATION SECTION
700A1
VOLTAGE DETECTOR

Fig.20

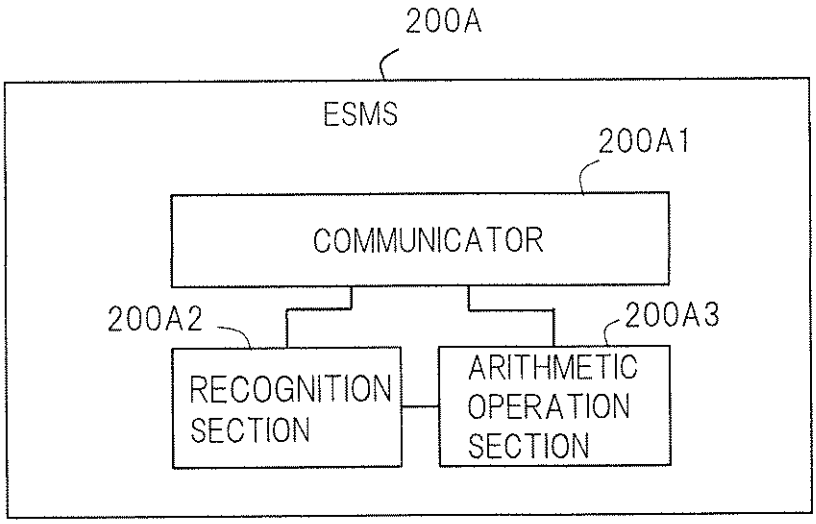
200A
ESMS
200A1
COMMUNICATOR
200A2
200A3
RECOGNITION SECTION
ARITHMETIC OPERATION SECTION

Fig.21

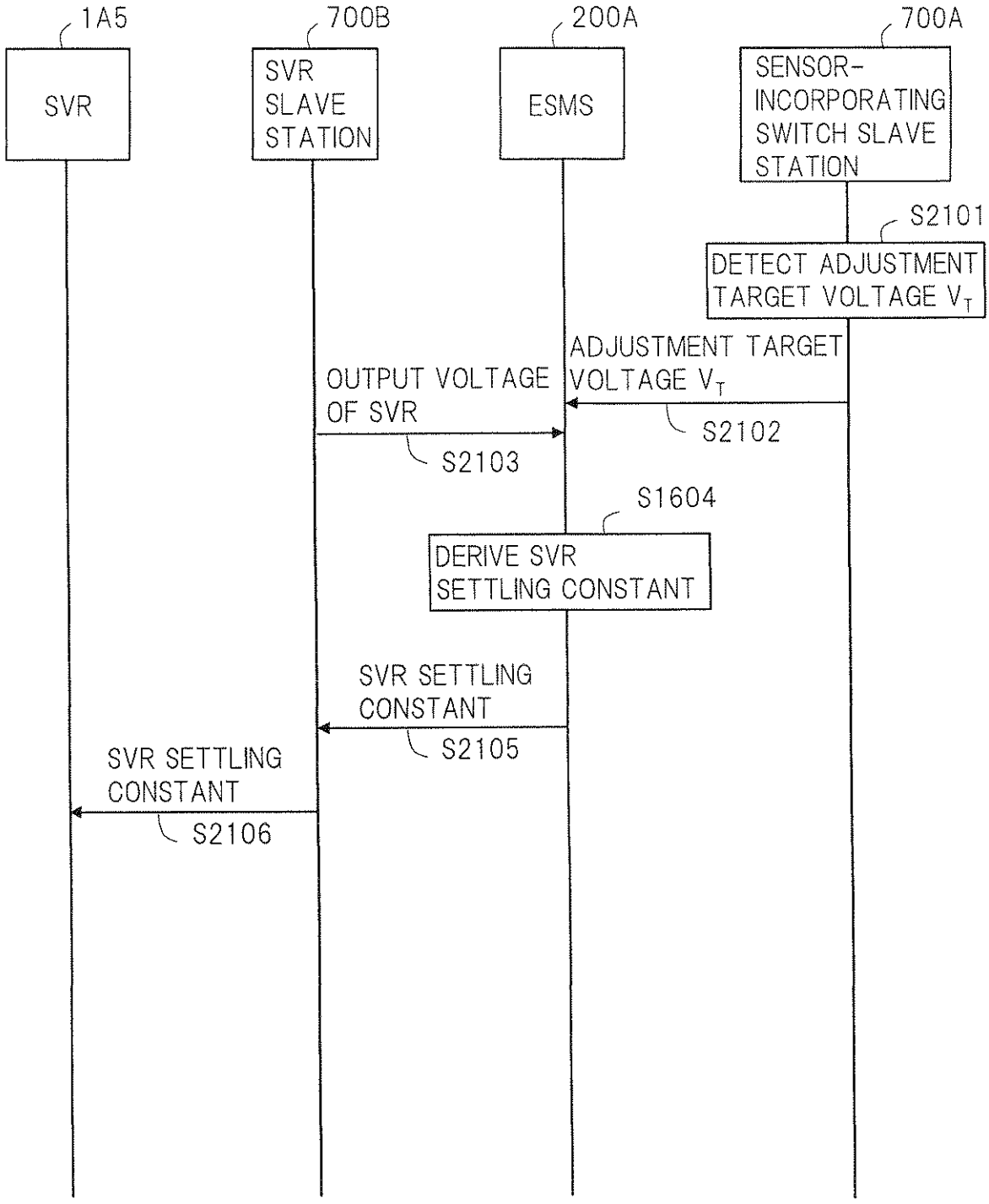
1A5
SVR
700B
SVR SLAVE STATION
200A
ESMS
700A
SENSOR-INCORPORATING SWITCH SLAVE STATION
S2101
DETECT ADJUSTMENT TARGET VOLTAGE $V_T$
ADJUSTMENT TARGET VOLTAGE $V_T$
S2102
OUTPUT VOLTAGE OF SVR
S2103
S1604
DERIVE SVR SETTLING CONSTANT
SVR SETTLING CONSTANT
S2105
SVR SETTLING CONSTANT
S2106

Fig.22

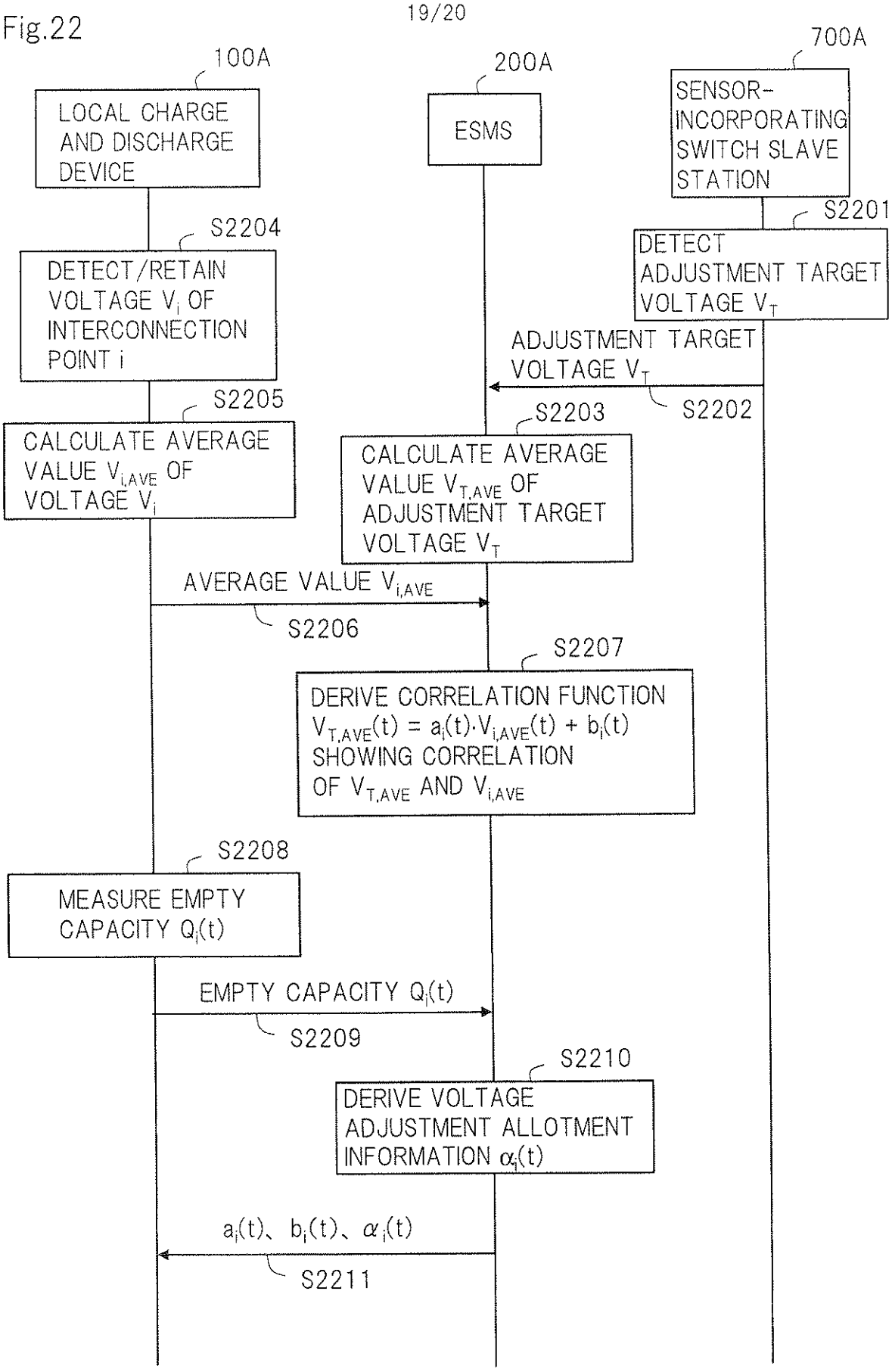
100A
LOCAL CHARGE AND DISCHARGE DEVICE
200A
ESMS
700A
SENSOR-INCORPORATING SWITCH SLAVE STATION
S2201
DETECT ADJUSTMENT TARGET VOLTAGE $V_T$
S2204
DETECT/RETAIN VOLTAGE $V_i$ OF INTERCONNECTION POINT i
ADJUSTMENT TARGET VOLTAGE $V_T$
S2202
S2205
CALCULATE AVERAGE VALUE $V_{i,AVE}$ OF VOLTAGE $V_i$
S2203
CALCULATE AVERAGE VALUE $V_{T,AVE}$ OF ADJUSTMENT TARGET VOLTAGE $V_T$
AVERAGE VALUE $V_{i,AVE}$
S2206
S2207
DERIVE CORRELATION FUNCTION $V_{T,AVE}(t) = a_i(t) \cdot V_{i,AVE}(t) + b_i(t)$ SHOWING CORRELATION OF $V_{T,AVE}$ AND $V_{i,AVE}$
S2208
MEASURE EMPTY CAPACITY $Q_i(t)$
EMPTY CAPACITY $Q_i(t)$
S2209
S2210
DERIVE VOLTAGE ADJUSTMENT ALLOTMENT INFORMATION $\alpha_i(t)$
$a_i(t)$、$b_i(t)$、$\alpha_i(t)$
S2211

Fig.23

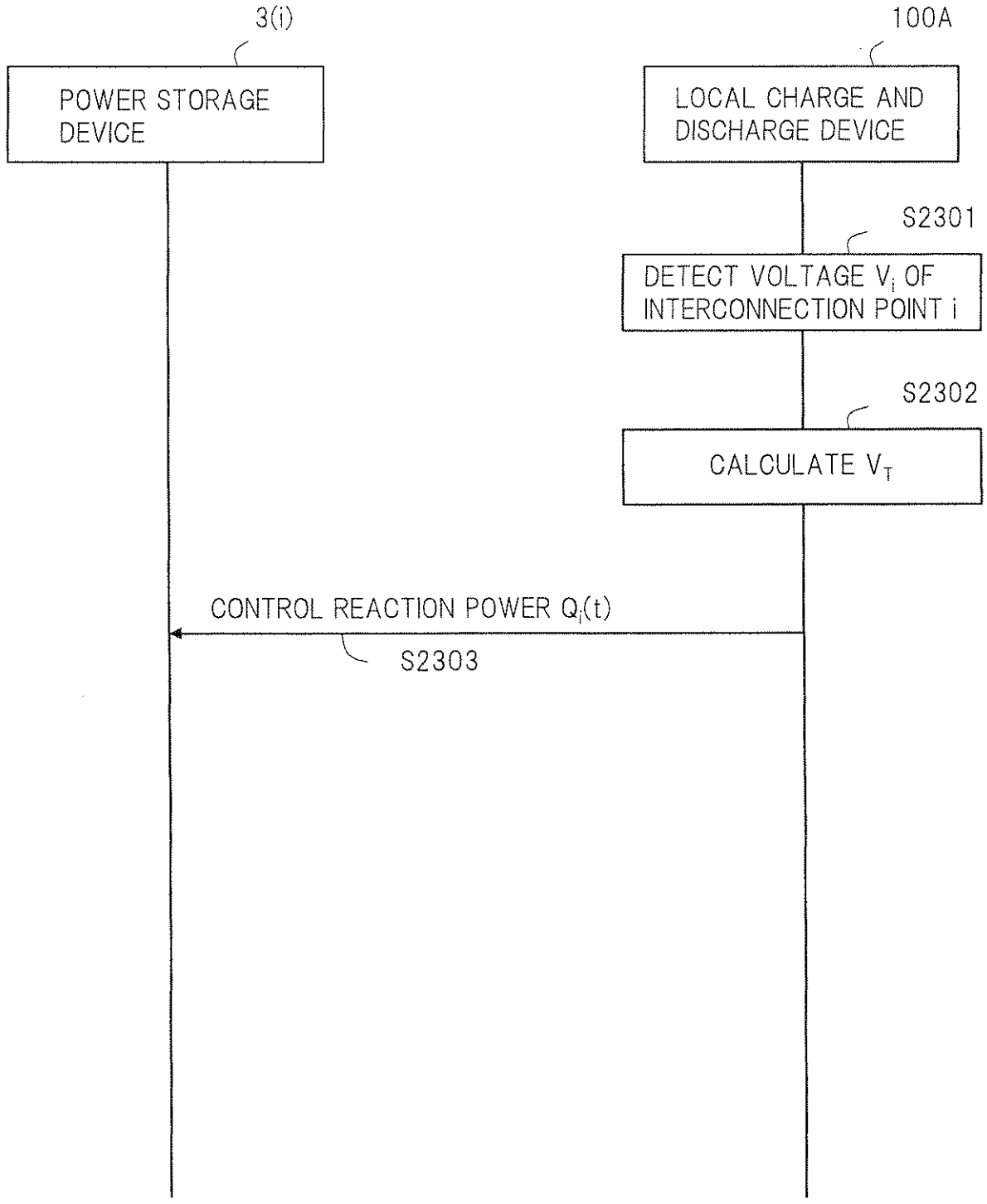
3(i)
100A
POWER STORAGE DEVICE
LOCAL CHARGE AND DISCHARGE DEVICE
S2301
DETECT VOLTAGE $V_i$ OF INTERCONNECTION POINT i
S2302
CALCULATE $V_T$
CONTROL REACTION POWER $Q_i(t)$
S2303