*FIG. 1*

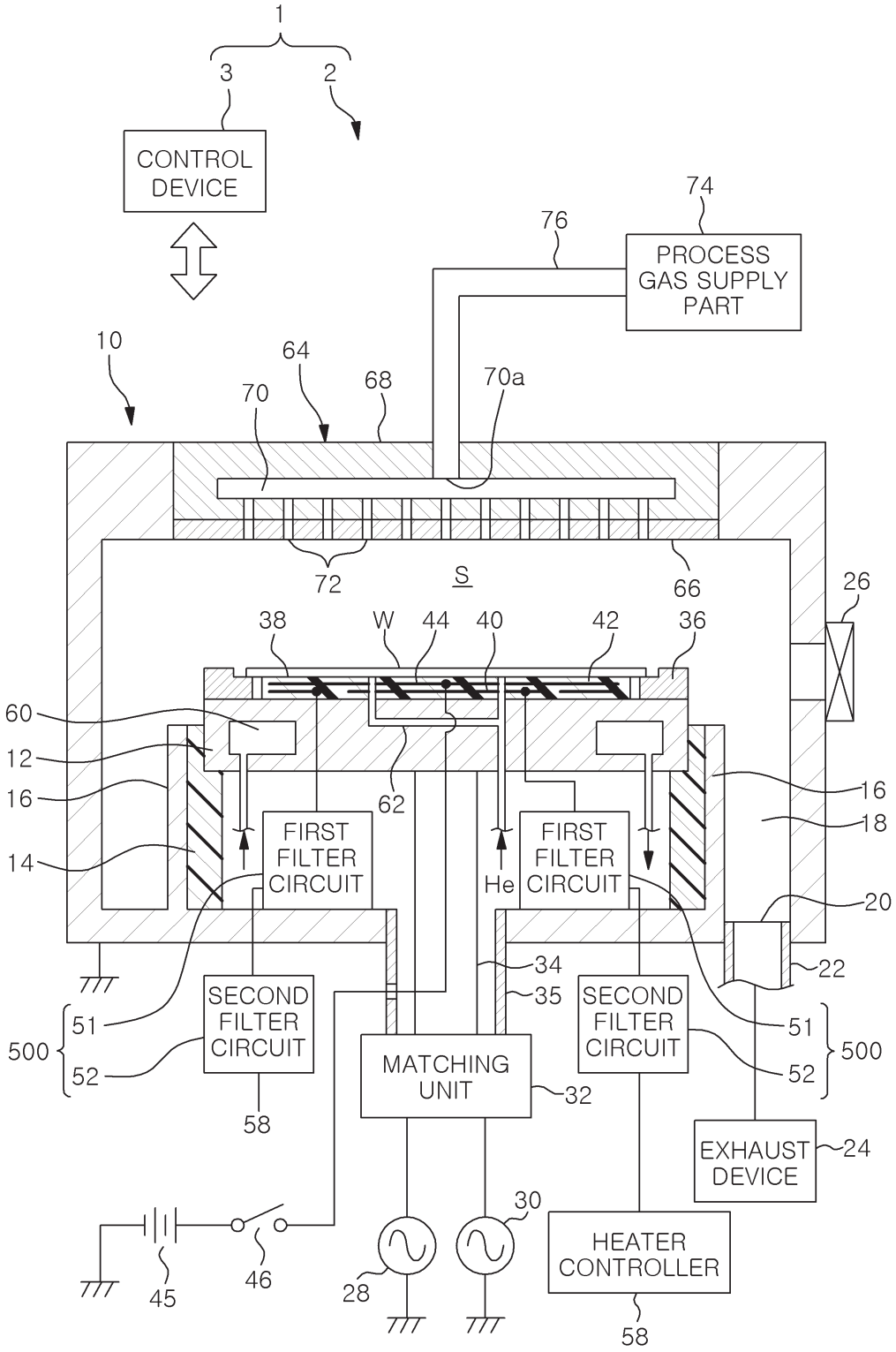
1
3
2
CONTROL DEVICE
74
76
PROCESS GAS SUPPLY PART
10
64
68
70a
70
72
S
66
26
38
W
44
40
42
36
60
12
16
62
16
18
14
FIRST FILTER CIRCUIT
He
FIRST FILTER CIRCUIT
20
34
22
35
SECOND FILTER CIRCUIT
SECOND FILTER CIRCUIT
51
500
52
MATCHING UNIT
32
58
EXHAUST DEVICE
24
30
45
46
28
HEATER CONTROLLER
58

*FIG.2*

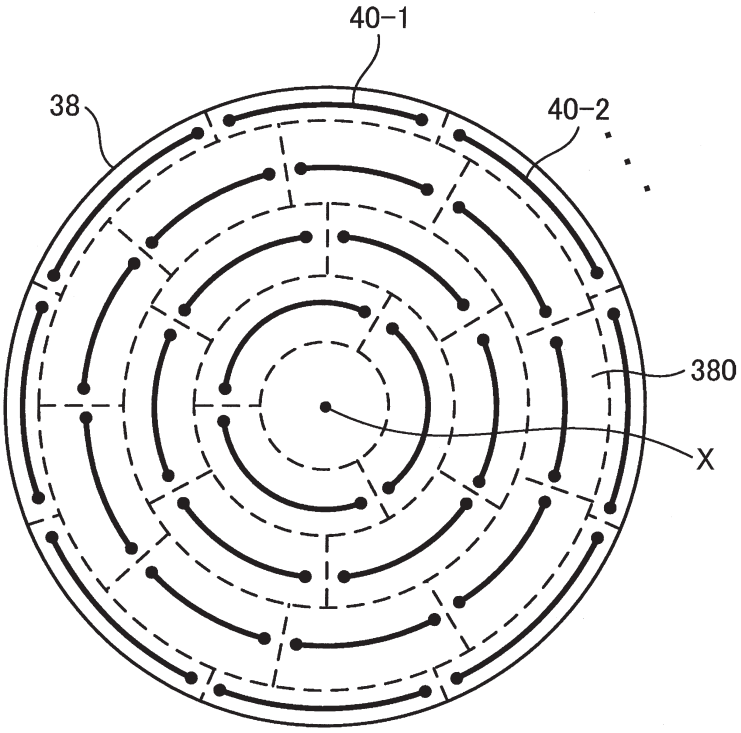

FIG.3

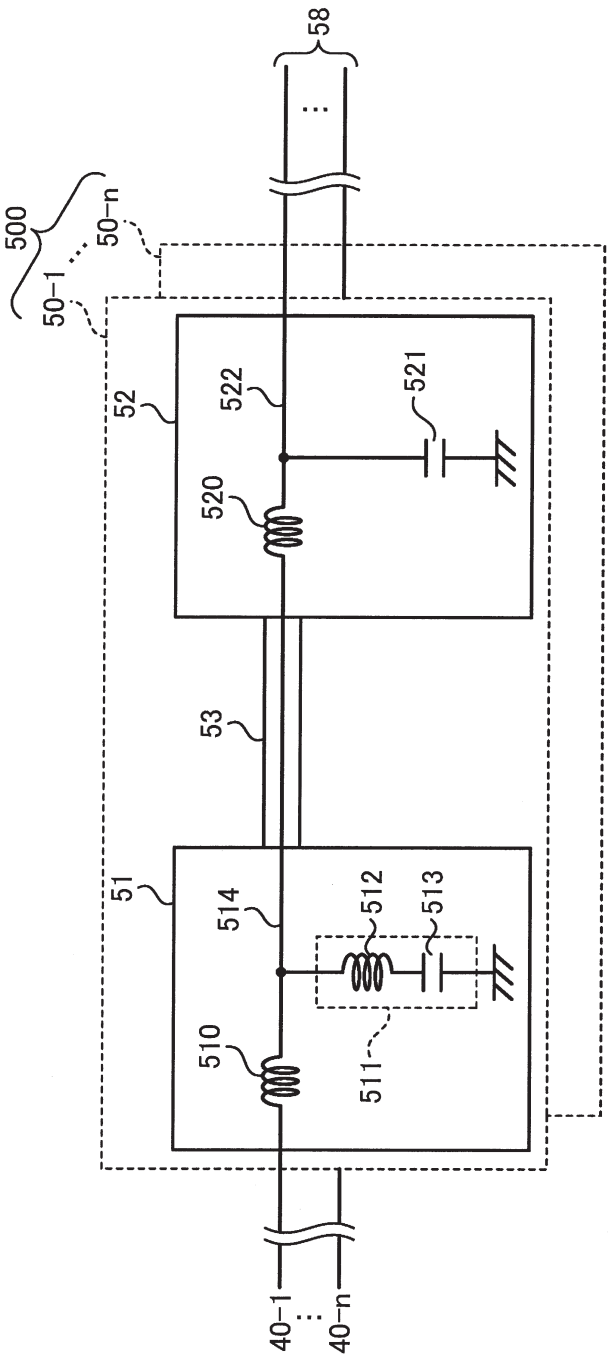

*FIG.4*

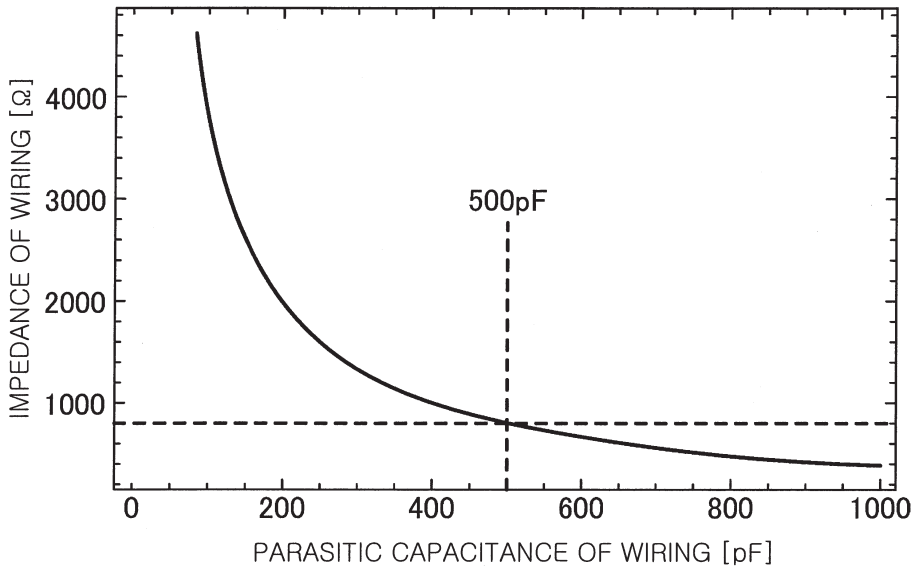
IMPEDANCE OF WIRING [Ω]
4000
3000
2000
1000
500pF
0
200
400
600
800
1000
PARASITIC CAPACITANCE OF WIRING [pF]

*FIG.5*

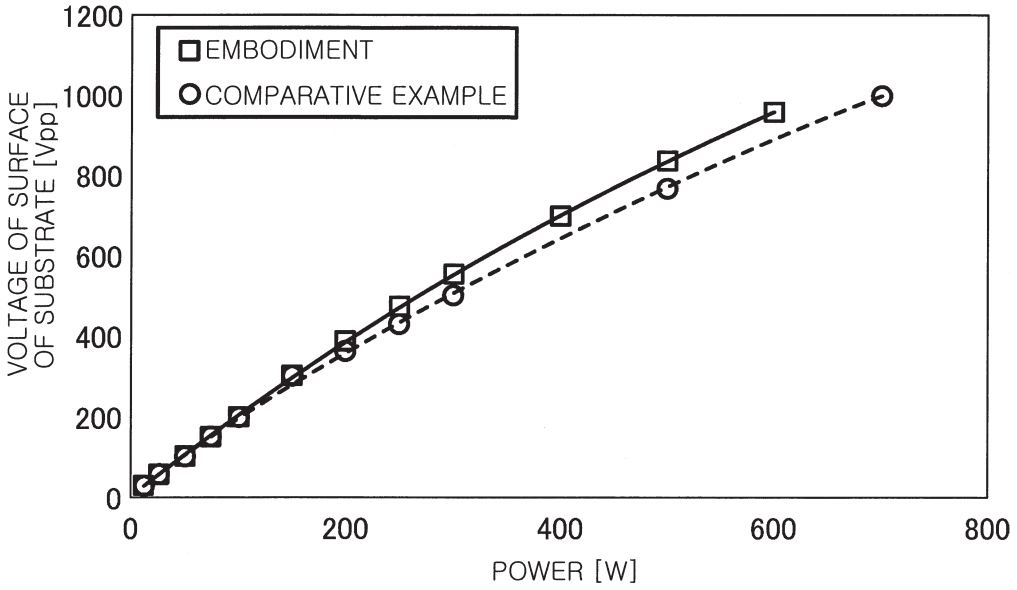
EMBODIMENT
COMPARATIVE EXAMPLE
VOLTAGE OF SURFACE OF SUBSTRATE [Vpp]
1200
1000
800
600
400
200
0
0
200
400
600
800
POWER [W]

*FIG. 6*

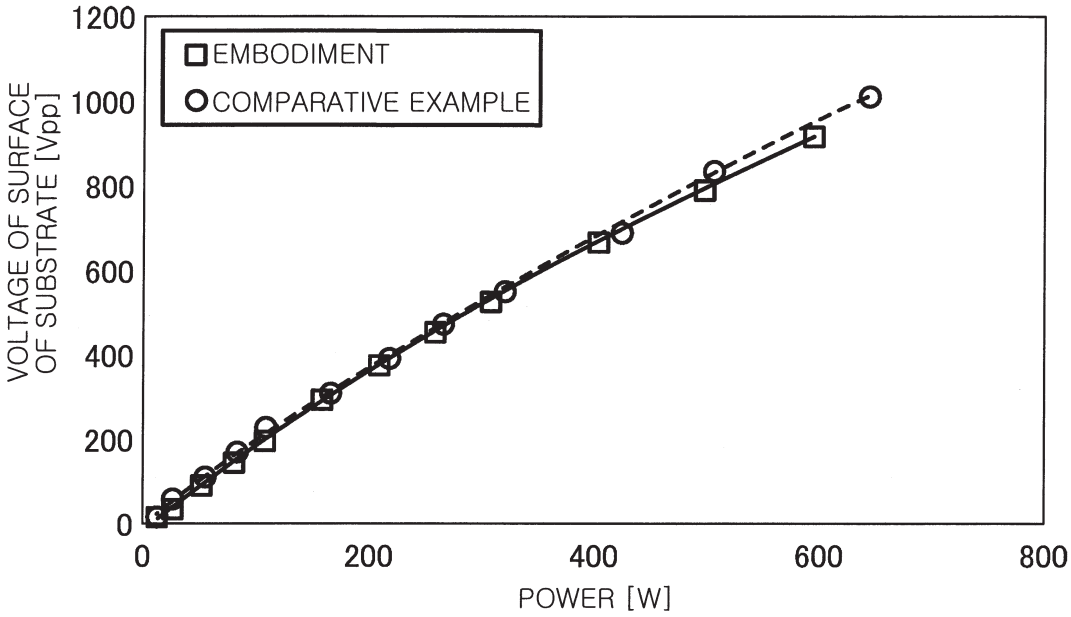
EMBODIMENT
COMPARATIVE EXAMPLE
VOLTAGE OF SURFACE OF SUBSTRATE [Vpp]
POWER [W]
0
200
400
600
800
1000
1200

*FIG. 7*

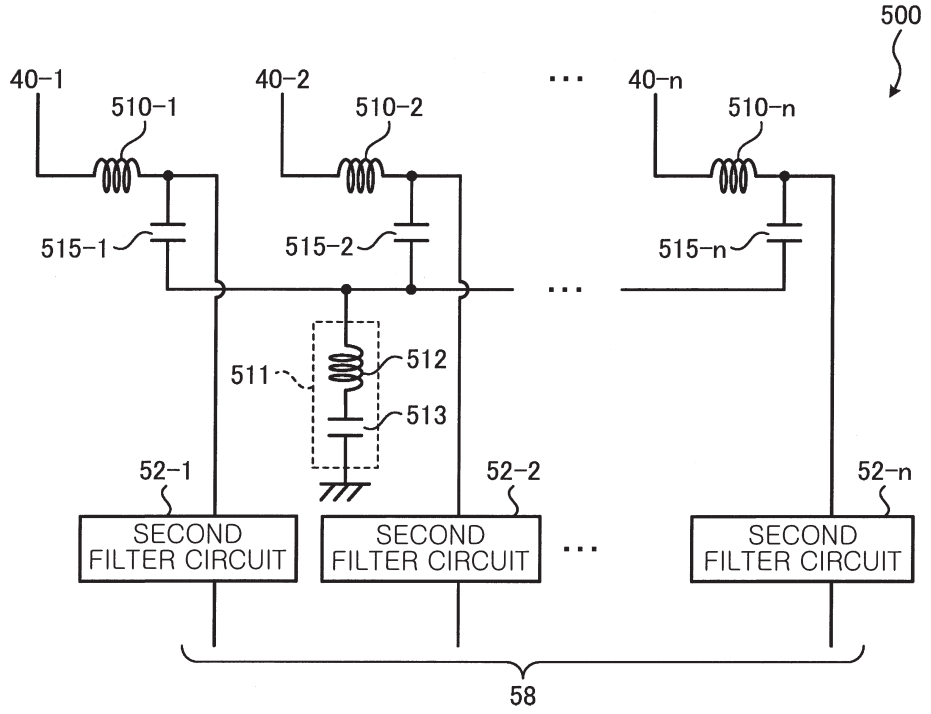
500
40-1
40-2
40-n
510-1
510-2
510-n
515-1
515-2
515-n
511
512
513
52-1
52-2
52-n
SECOND FILTER CIRCUIT
SECOND FILTER CIRCUIT
SECOND FILTER CIRCUIT
58

*FIG. 8*

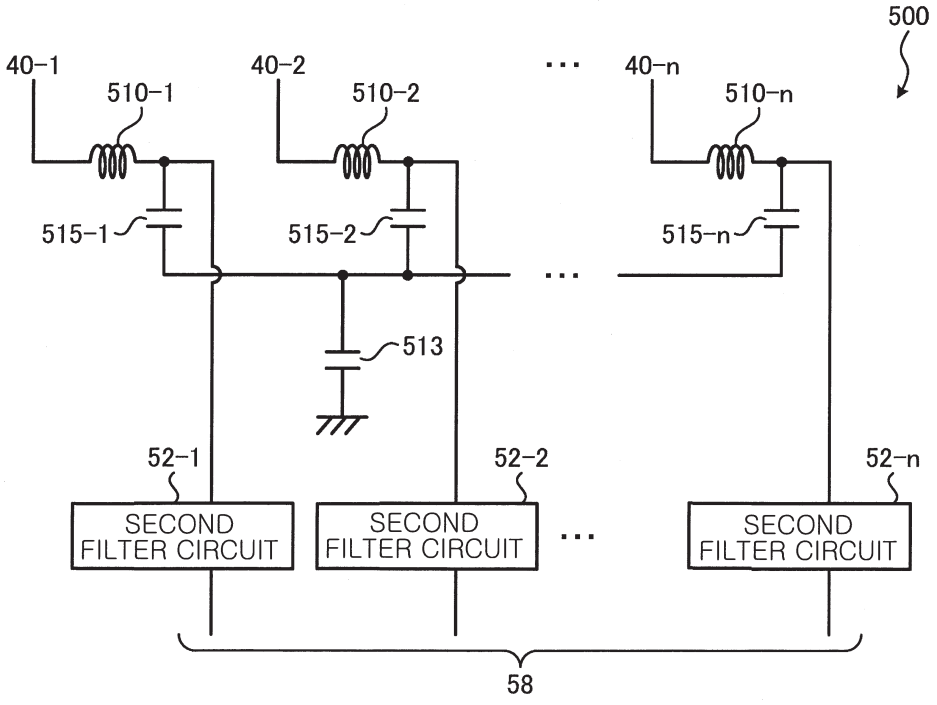
500
40-1
40-2
40-n
510-1
510-2
510-n
515-1
515-2
515-n
513
52-1
52-2
52-n
SECOND FILTER CIRCUIT
SECOND FILTER CIRCUIT
SECOND FILTER CIRCUIT
58

*FIG. 9*

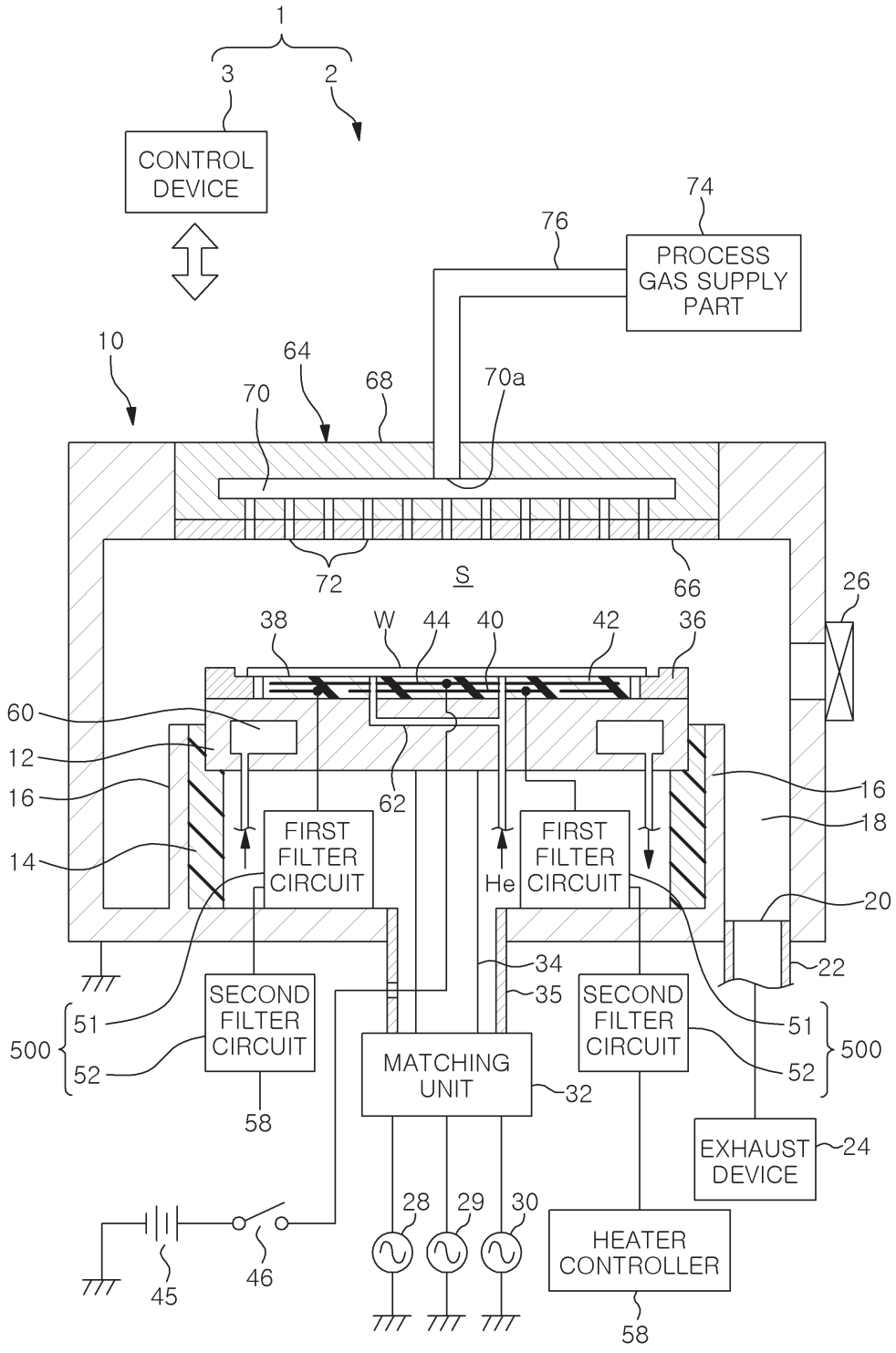
1
3
2
CONTROL DEVICE
74
76
PROCESS GAS SUPPLY PART
10
64
70
68
70a
72
S
66
26
38
W
44
40
42
36
60
12
16
62
16
18
14
FIRST FILTER CIRCUIT
He
FIRST FILTER CIRCUIT
20
34
22
35
SECOND FILTER CIRCUIT
SECOND FILTER CIRCUIT
51
500
52
MATCHING UNIT
32
58
EXHAUST DEVICE
24
28
29
30
HEATER CONTROLLER
45
46
58

FIG. 10

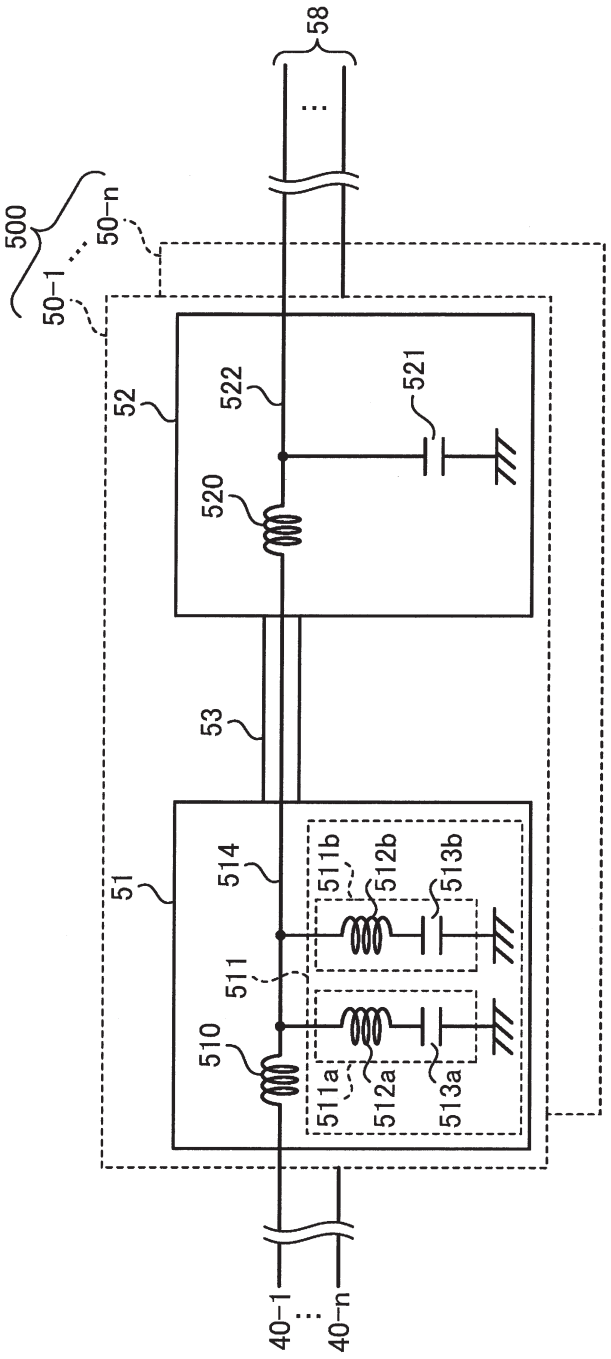
58
500
50-1
50-n
52
522
521
520
53
51
514
511b
512b
513b
511
510
511a
512a
513a
40-1
40-n

*FIG. 11*

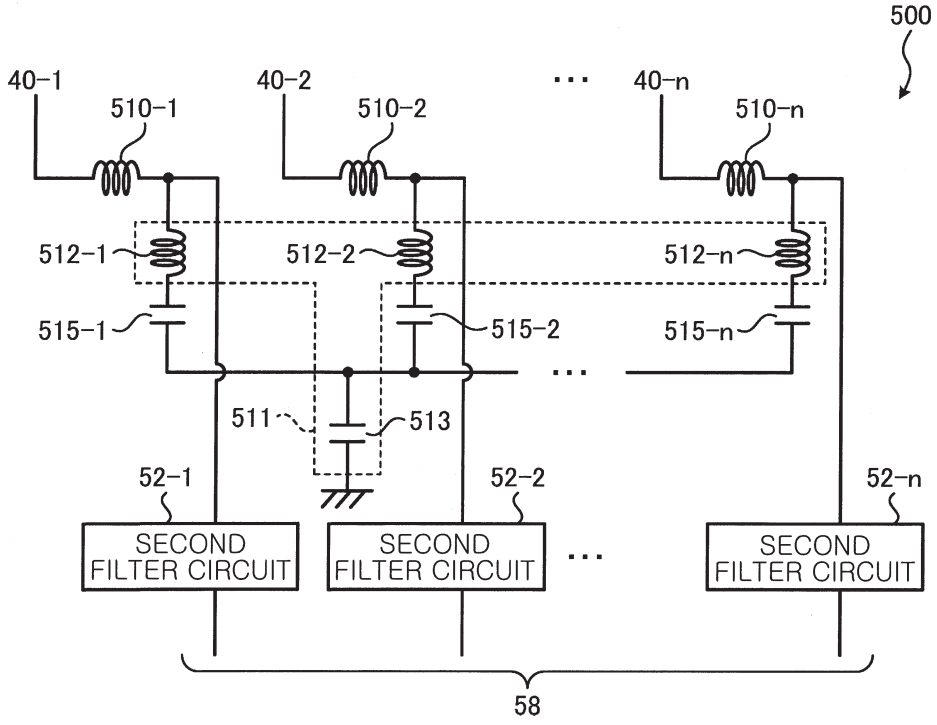
500
40-1
40-2
40-n
510-1
510-2
510-n
512-1
512-2
512-n
515-1
515-2
515-n
511
513
52-1
52-2
52-n
SECOND FILTER CIRCUIT
SECOND FILTER CIRCUIT
SECOND FILTER CIRCUIT
58

*FIG. 12*

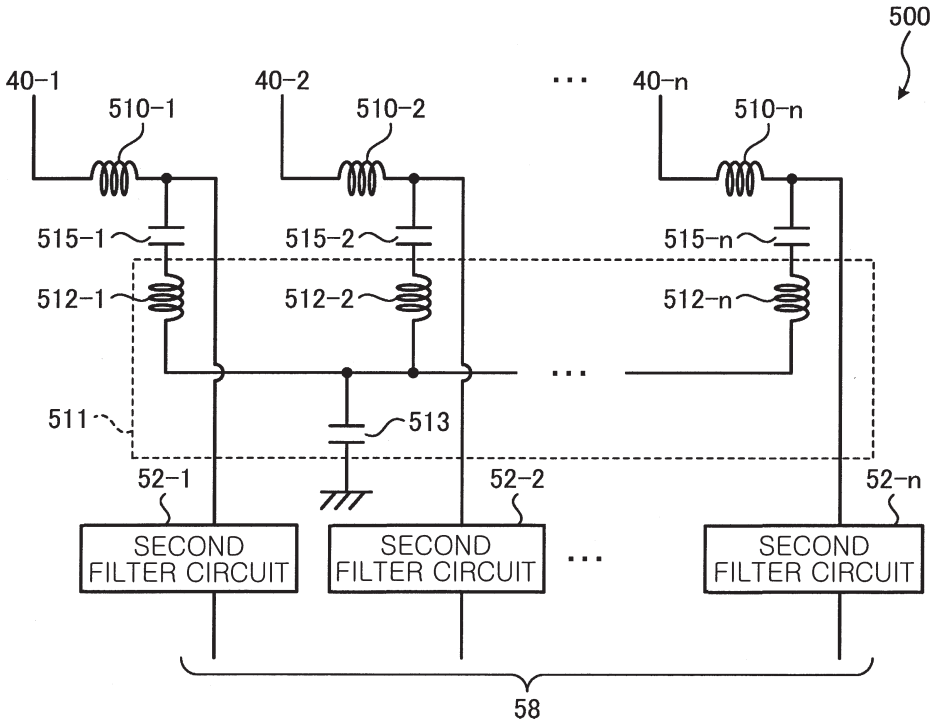
500
40-1
40-2
40-n
510-1
510-2
510-n
515-1
515-2
515-n
512-1
512-2
512-n
511
513
52-1
52-2
52-n
SECOND FILTER CIRCUIT
SECOND FILTER CIRCUIT
SECOND FILTER CIRCUIT
58

*FIG. 13*

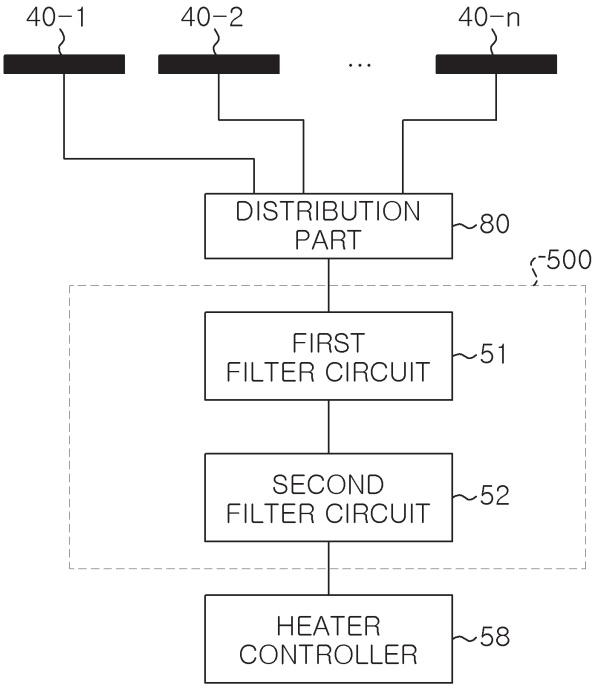
40-1
40-2
...
40-n
DISTRIBUTION PART
80
500
FIRST FILTER CIRCUIT
51
SECOND FILTER CIRCUIT
52
HEATER CONTROLLER
58