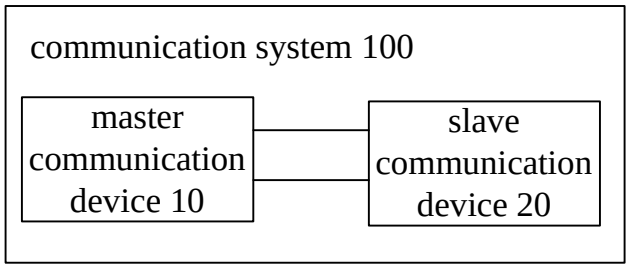

Fig. 1

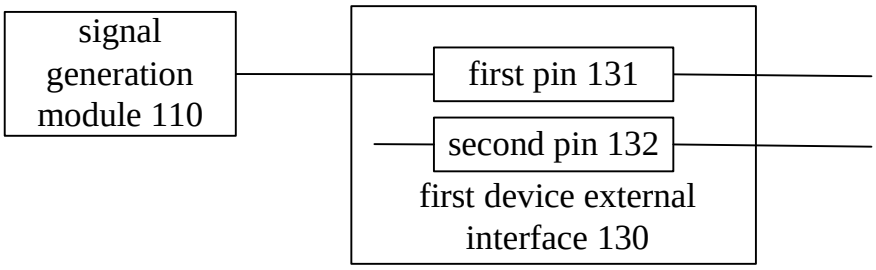

Fig. 2

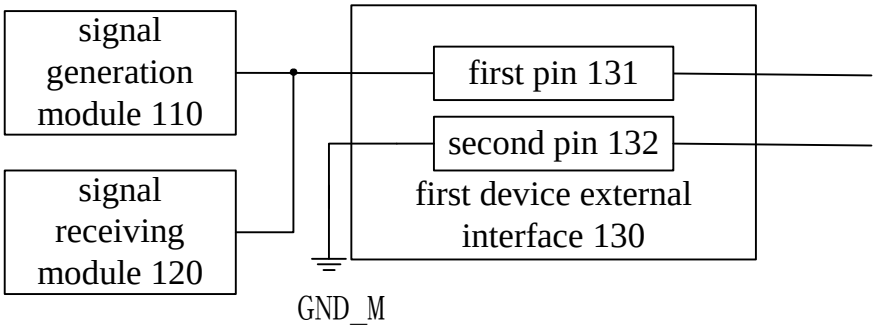

Fig. 3

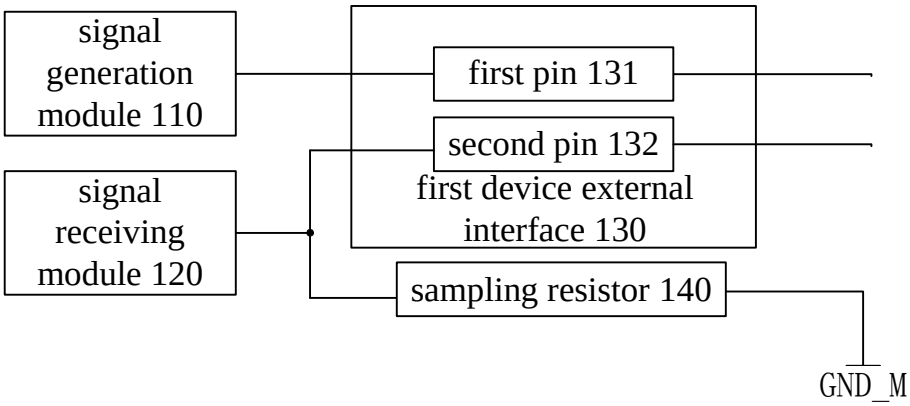

Fig. 4

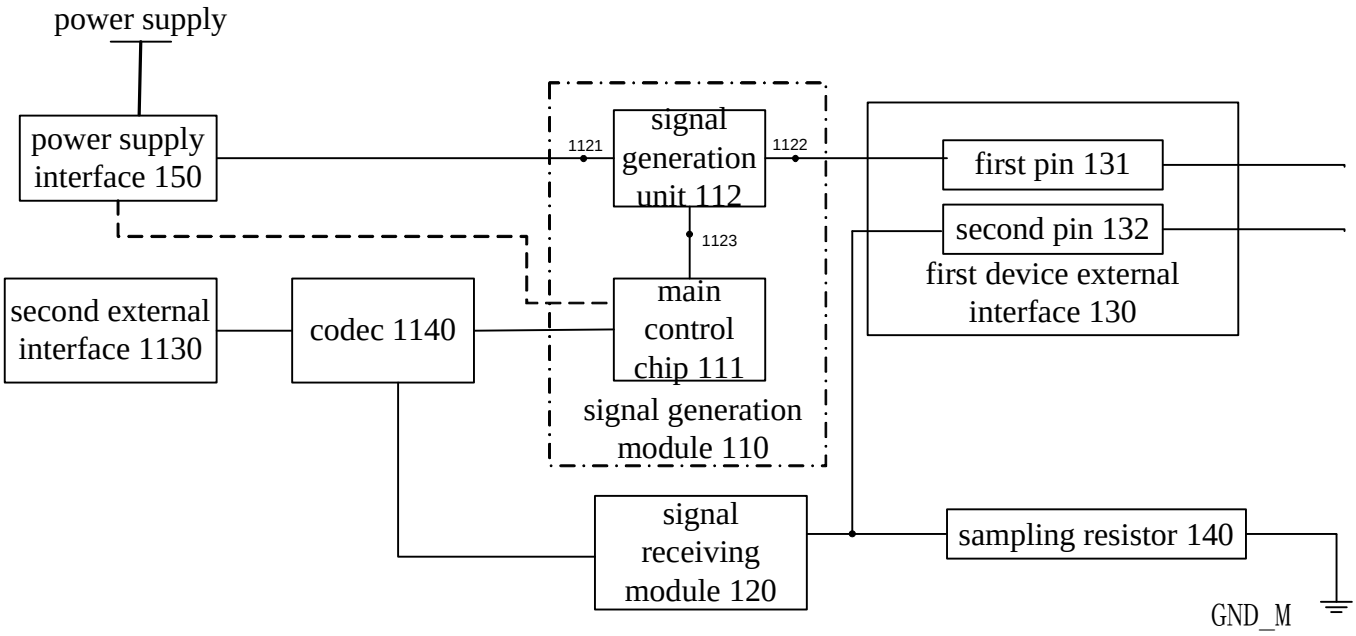

Fig. 5

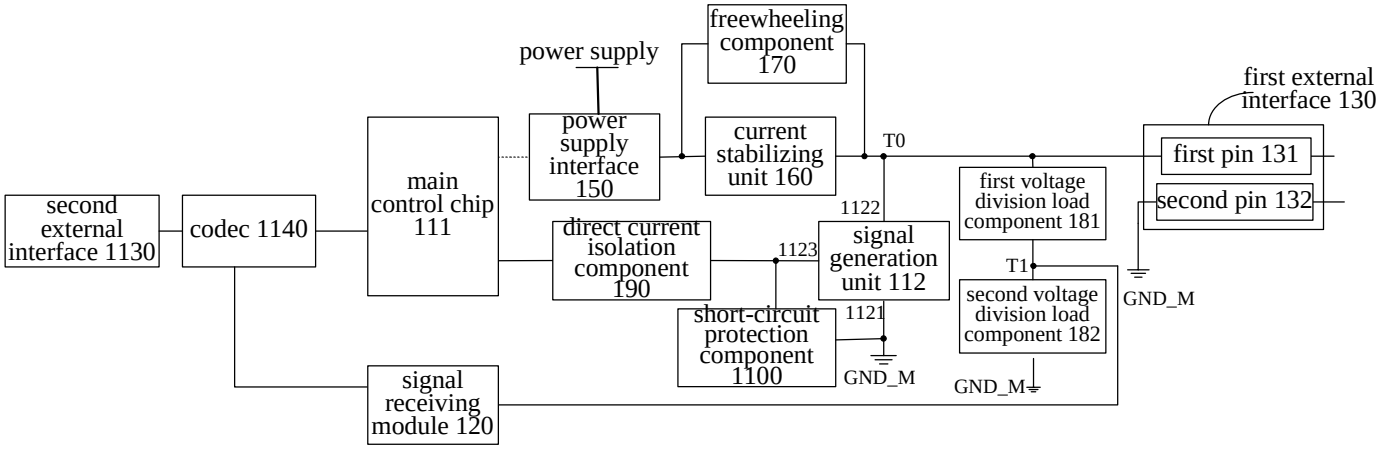

Fig. 6

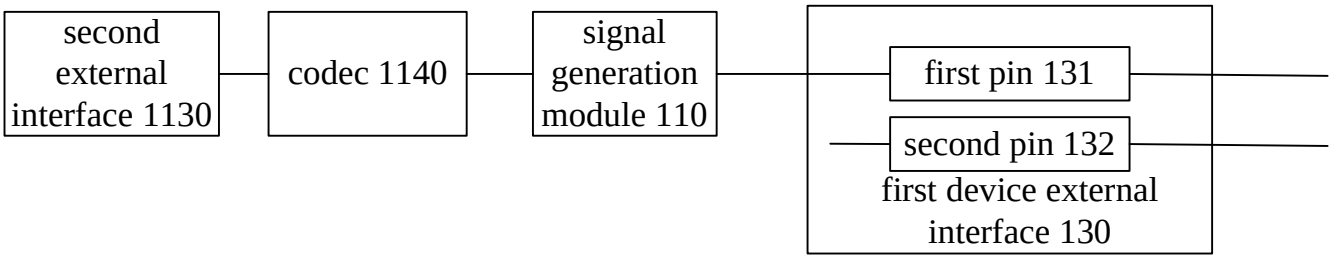

Fig. 6 A

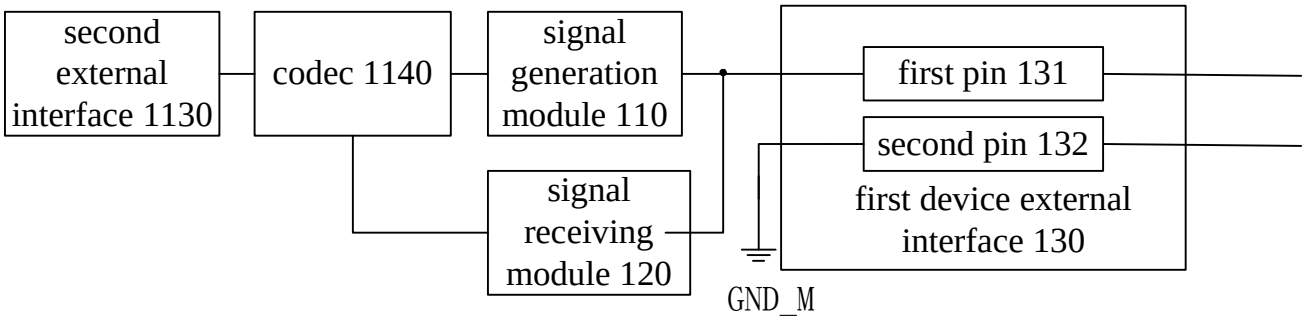

Fig. 6 B

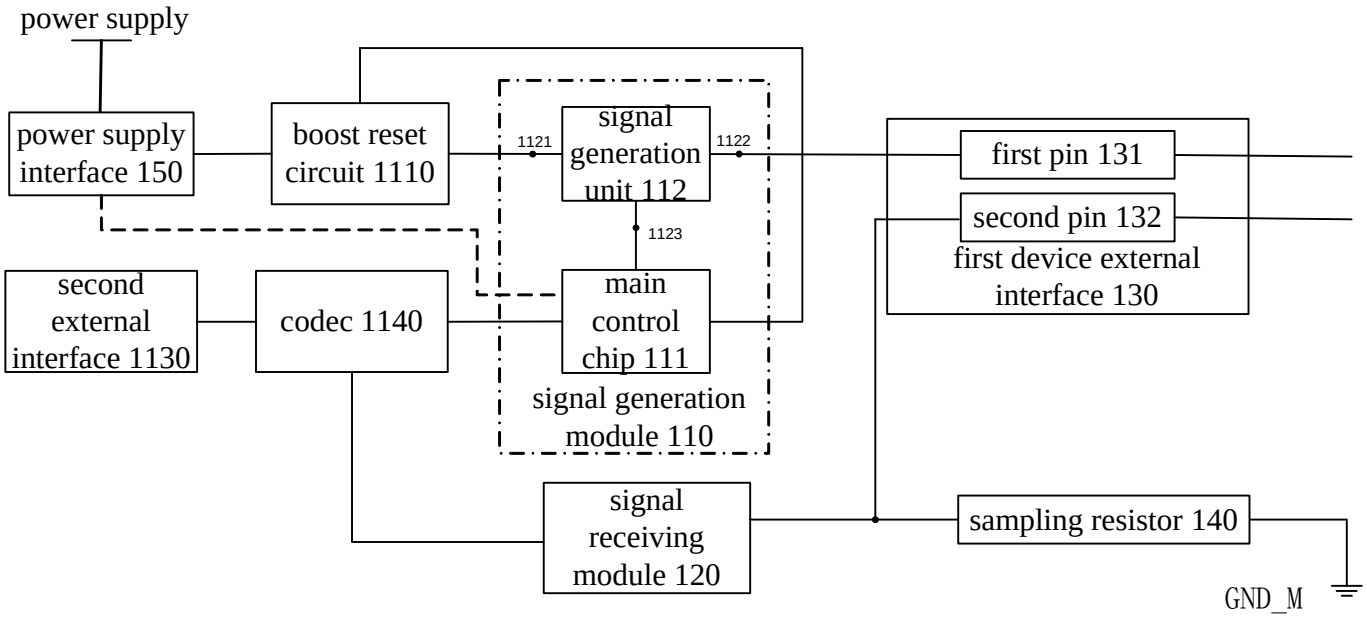

Fig. 7A

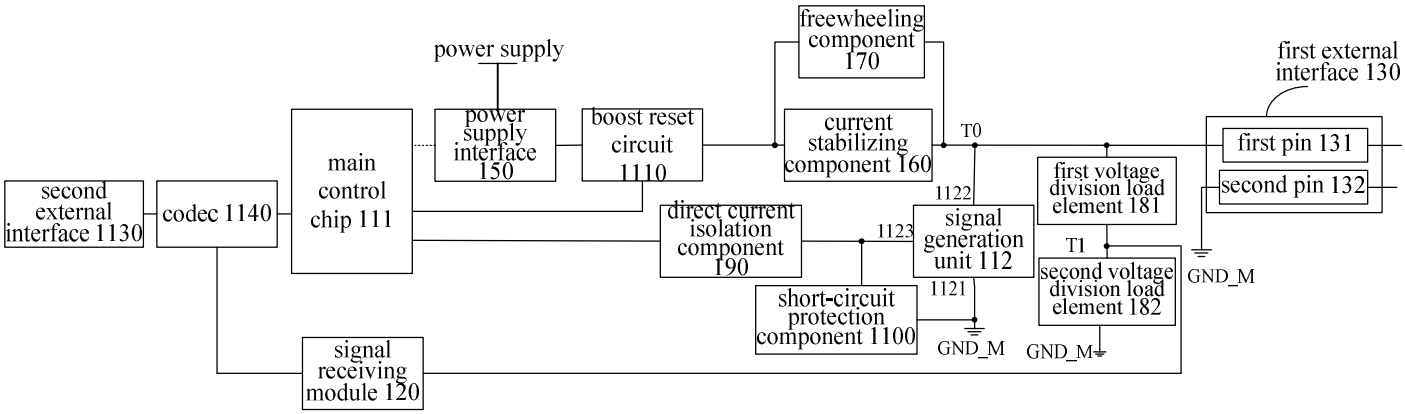

Fig. 7B

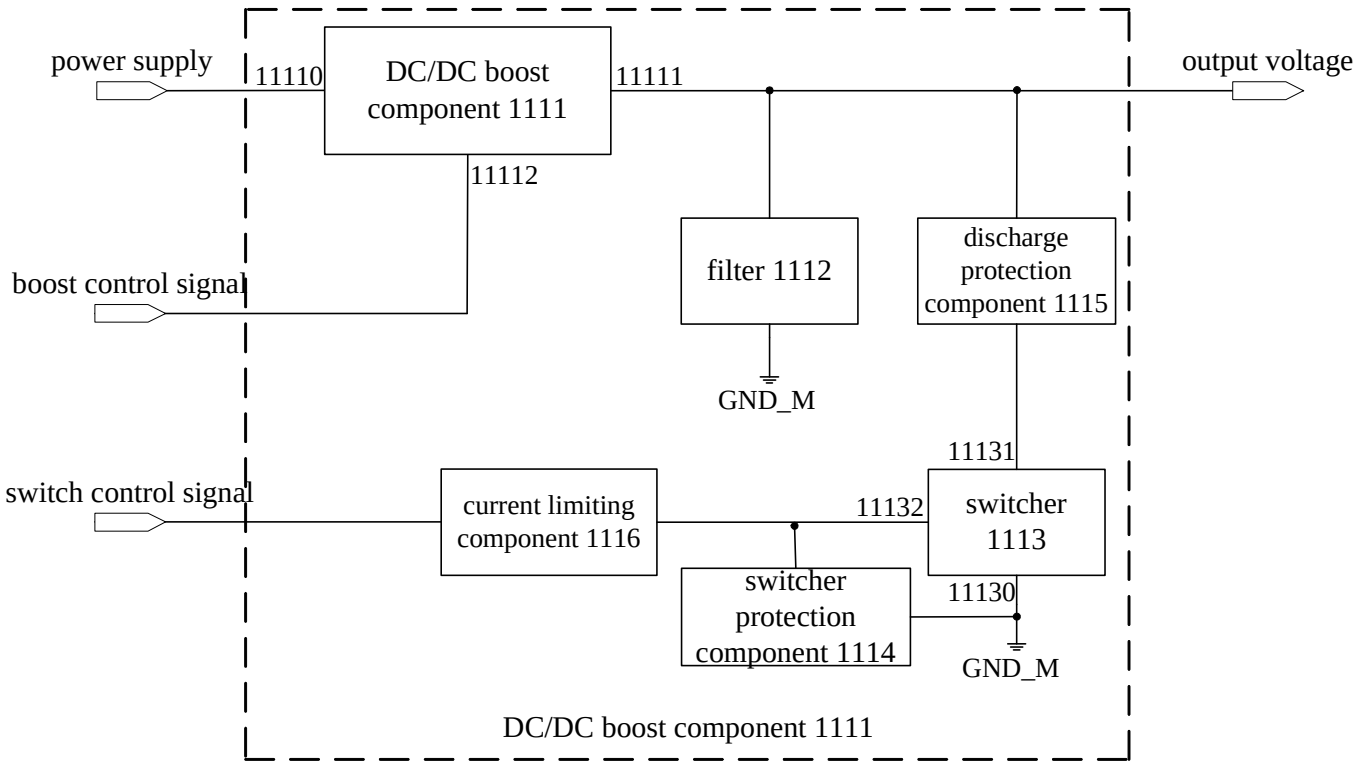
power supply
11110
DC/DC boost component 1111
11111
output voltage
11112
boost control signal
filter 1112
discharge protection component 1115
GND_M
11131
switch control signal
current limiting component 1116
11132
switcher 1113
switcher protection component 1114
11130
GND_M
DC/DC boost component 1111

Fig. 7C

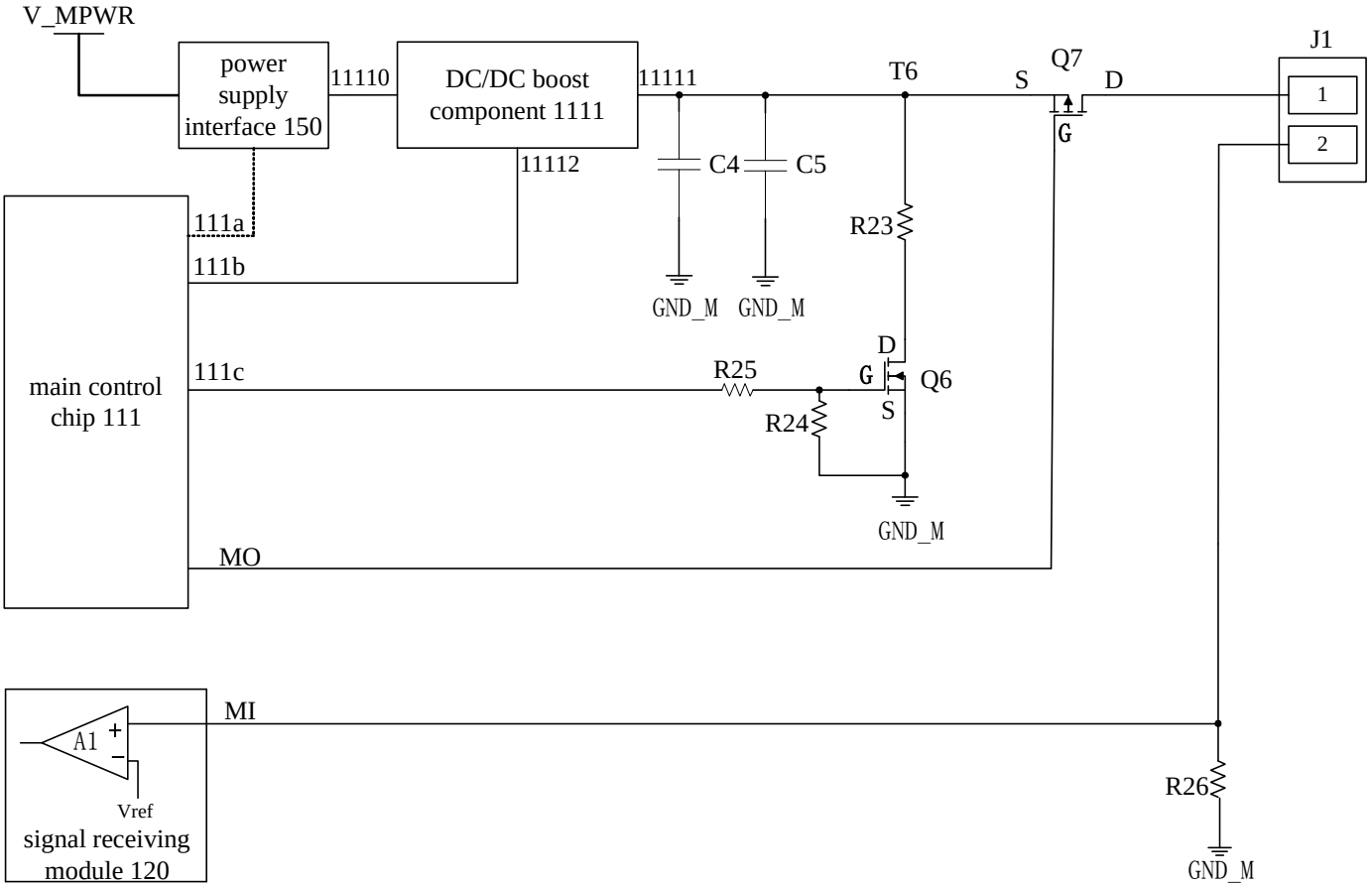
V_MPWR
power supply interface 150
11110
DC/DC boost component 1111
11111
T6
S
Q7
D
J1
1
2
G
11112
C4
C5
111a
R23
111b
GND_M
GND_M
D
main control chip 111
111c
R25
G
Q6
R24
S
GND_M
MO
MI
A1
+
−
Vref
signal receiving module 120
R26
GND_M

Fig. 7D

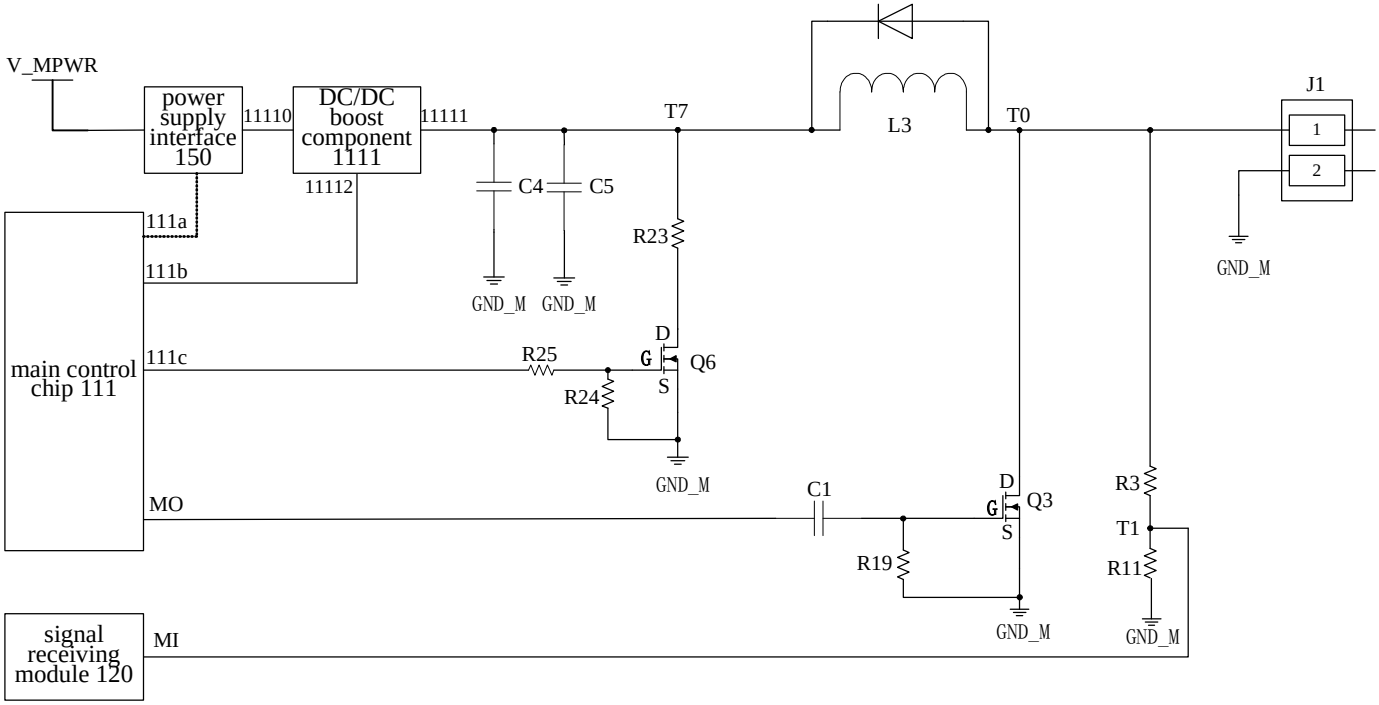
V_MPWR
power supply interface 150
11110
DC/DC boost component 1111
11111
11112
T7
L3
T0
J1
1
2
C4
C5
111a
111b
R23
GND_M
GND_M
GND_M
GND_M
main control chip 111
111c
R25
D
G
Q6
S
R24
GND_M
MO
C1
D
G
Q3
S
R3
T1
R11
R19
GND_M
GND_M
signal receiving module 120
MI

Fig. 7E

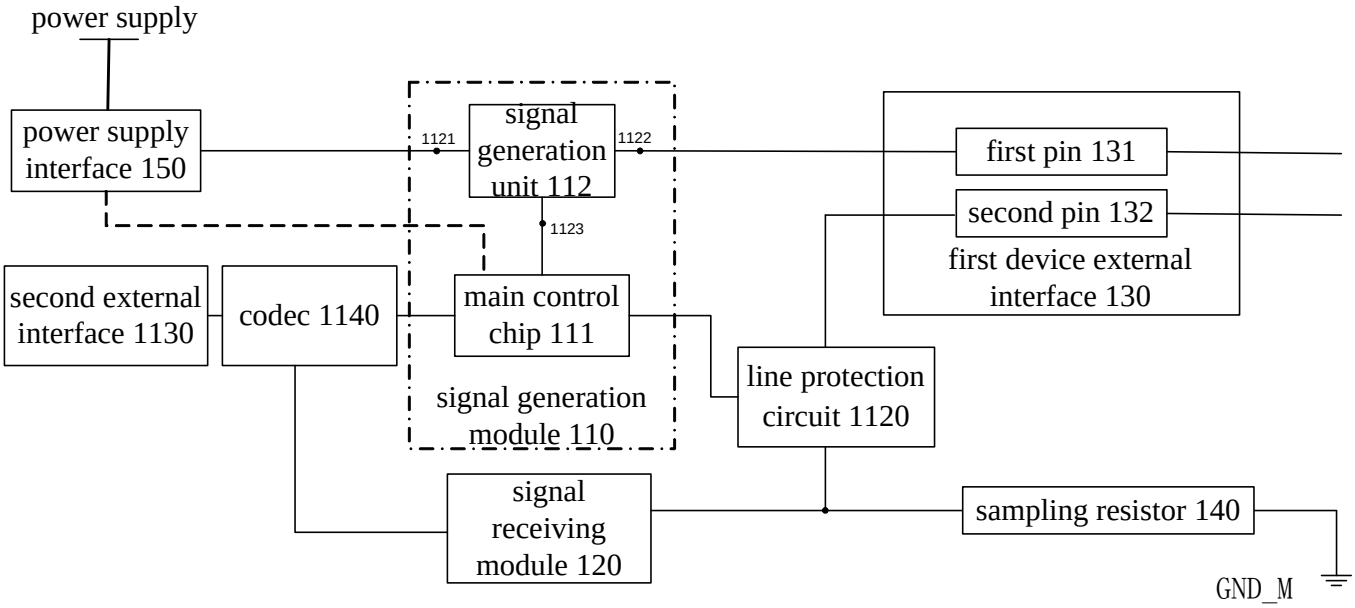
power supply
power supply interface 150
1121
signal generation unit 112
1122
1123
first pin 131
second pin 132
first device external interface 130
second external interface 1130
codec 1140
main control chip 111
signal generation module 110
line protection circuit 1120
signal receiving module 120
sampling resistor 140
GND_M

Fig. 8A

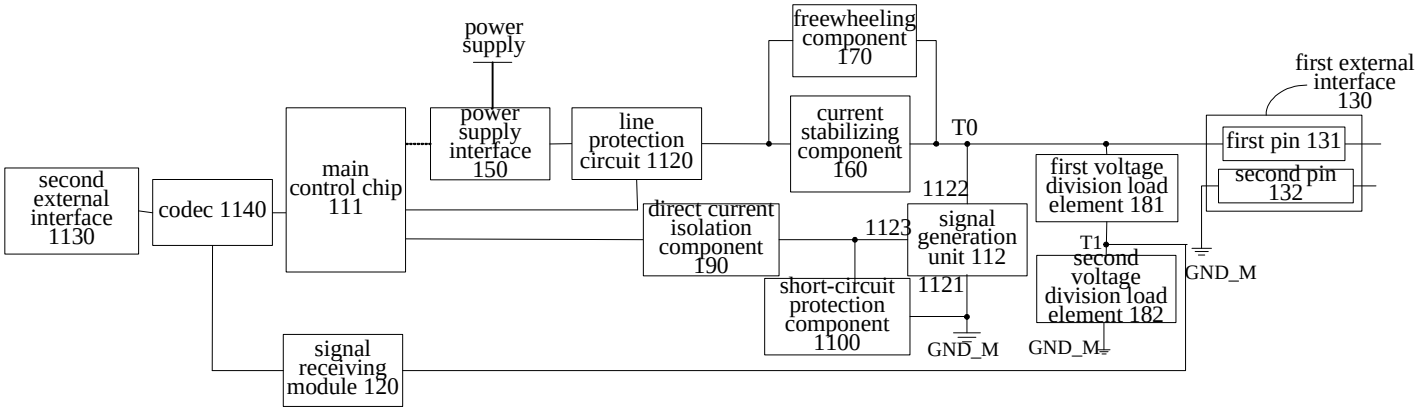

Fig. 8B

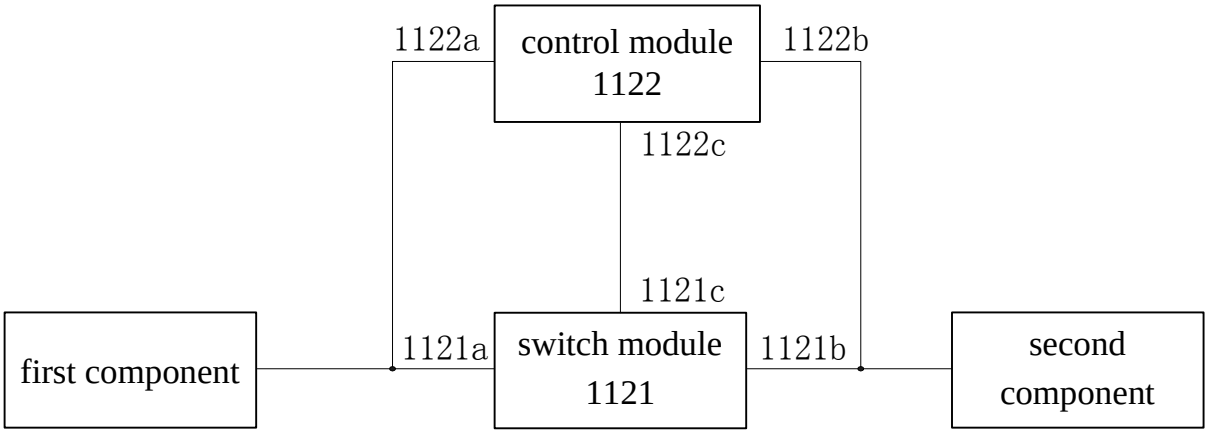

Fig. 8C

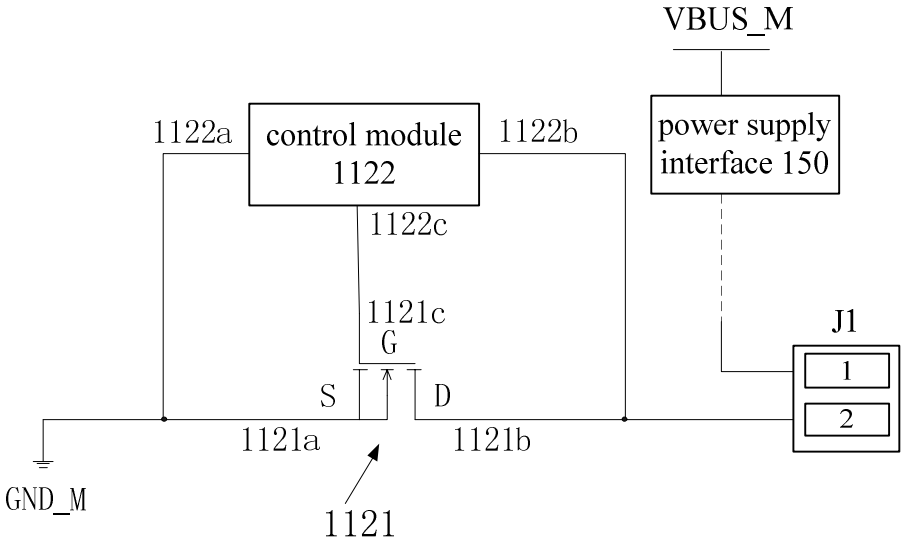

Fig. 8D

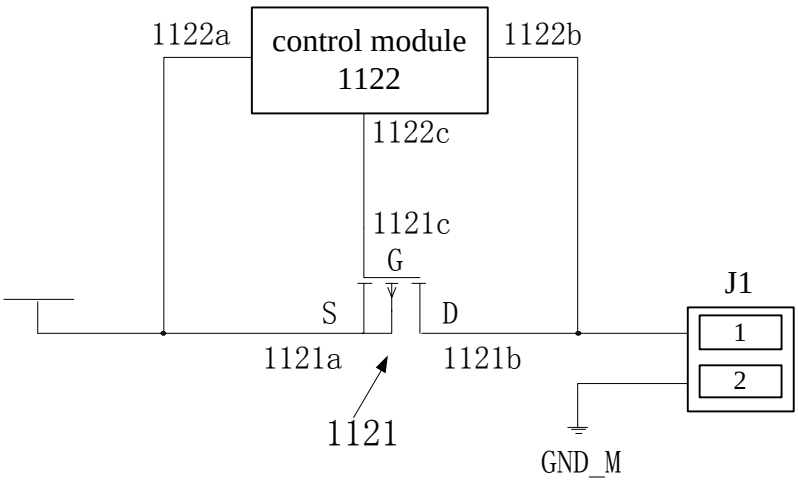

Fig. 8E

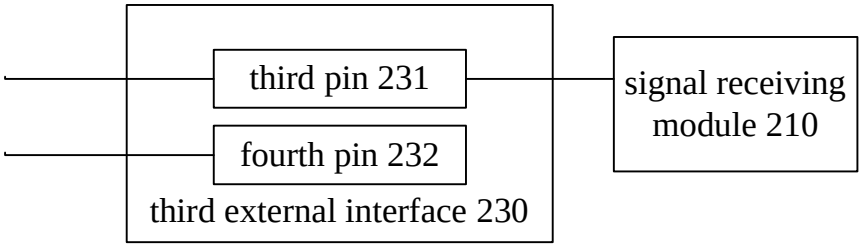

Fig. 9

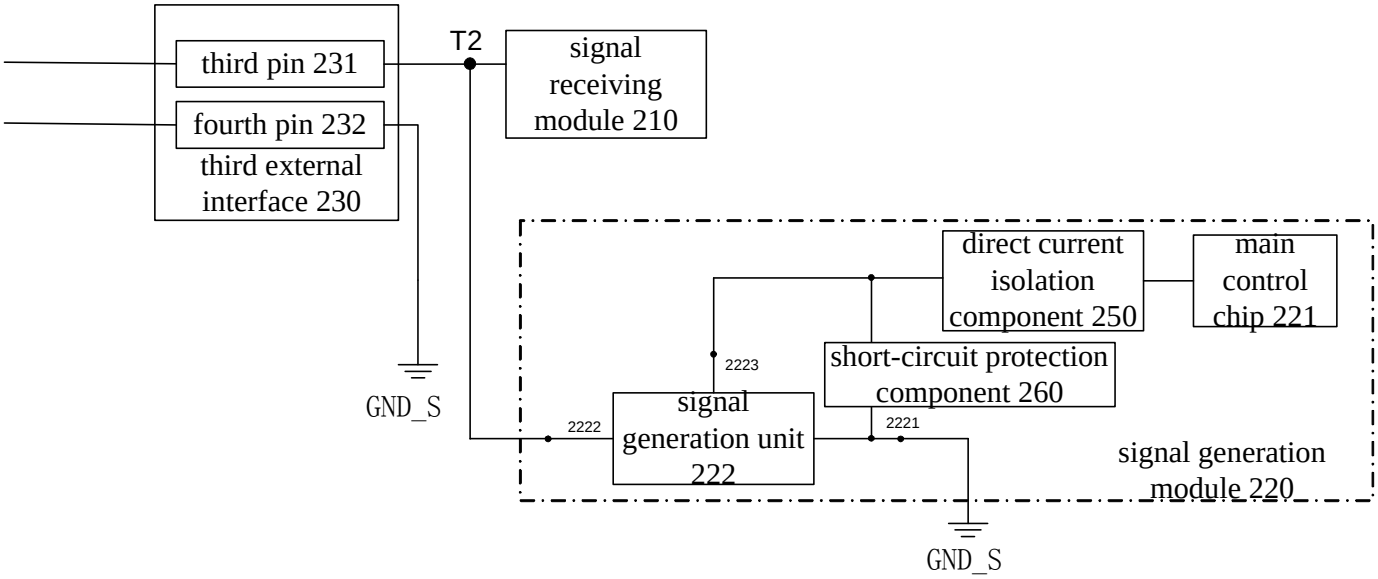

Fig. 10

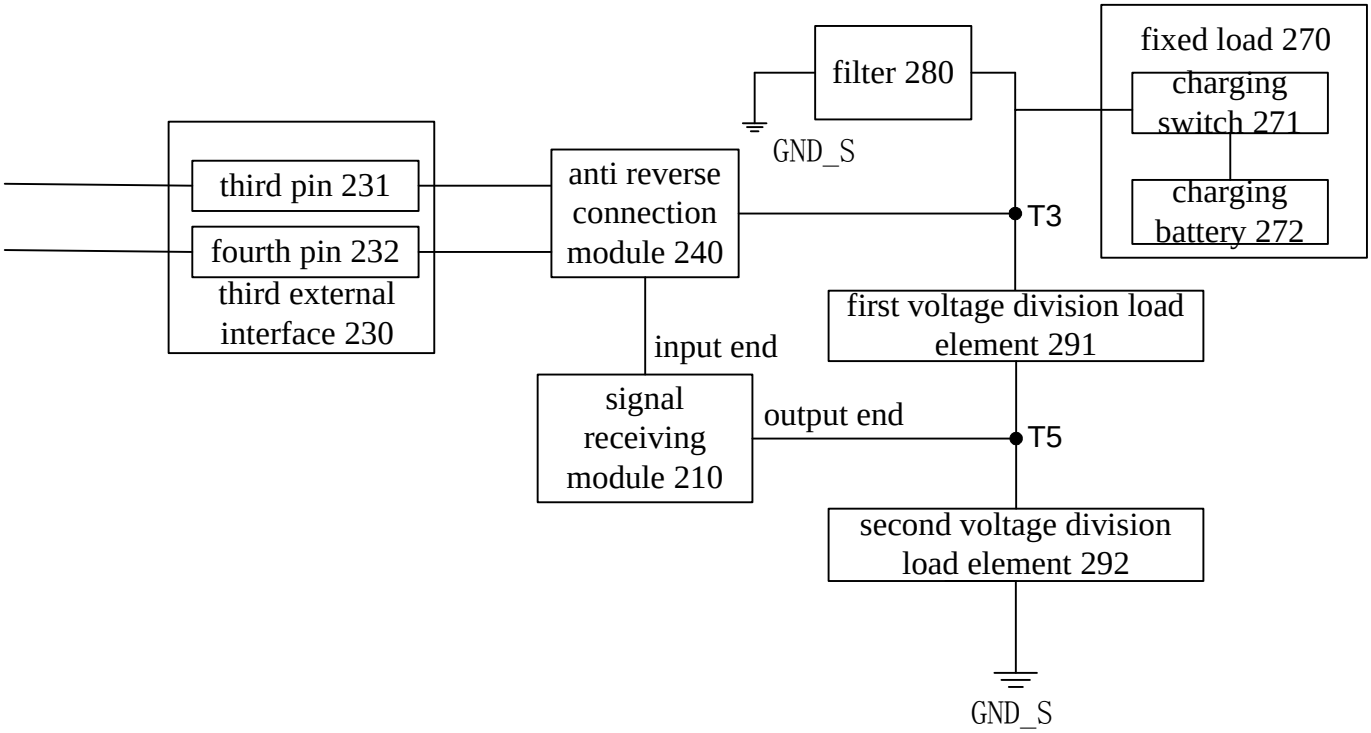
fixed load 270
charging switch 271
charging battery 272
filter 280
GND_S
third pin 231
fourth pin 232
third external interface 230
anti reverse connection module 240
T3
first voltage division load element 291
input end
signal receiving module 210
output end
T5
second voltage division load element 292
GND_S

Fig. 11

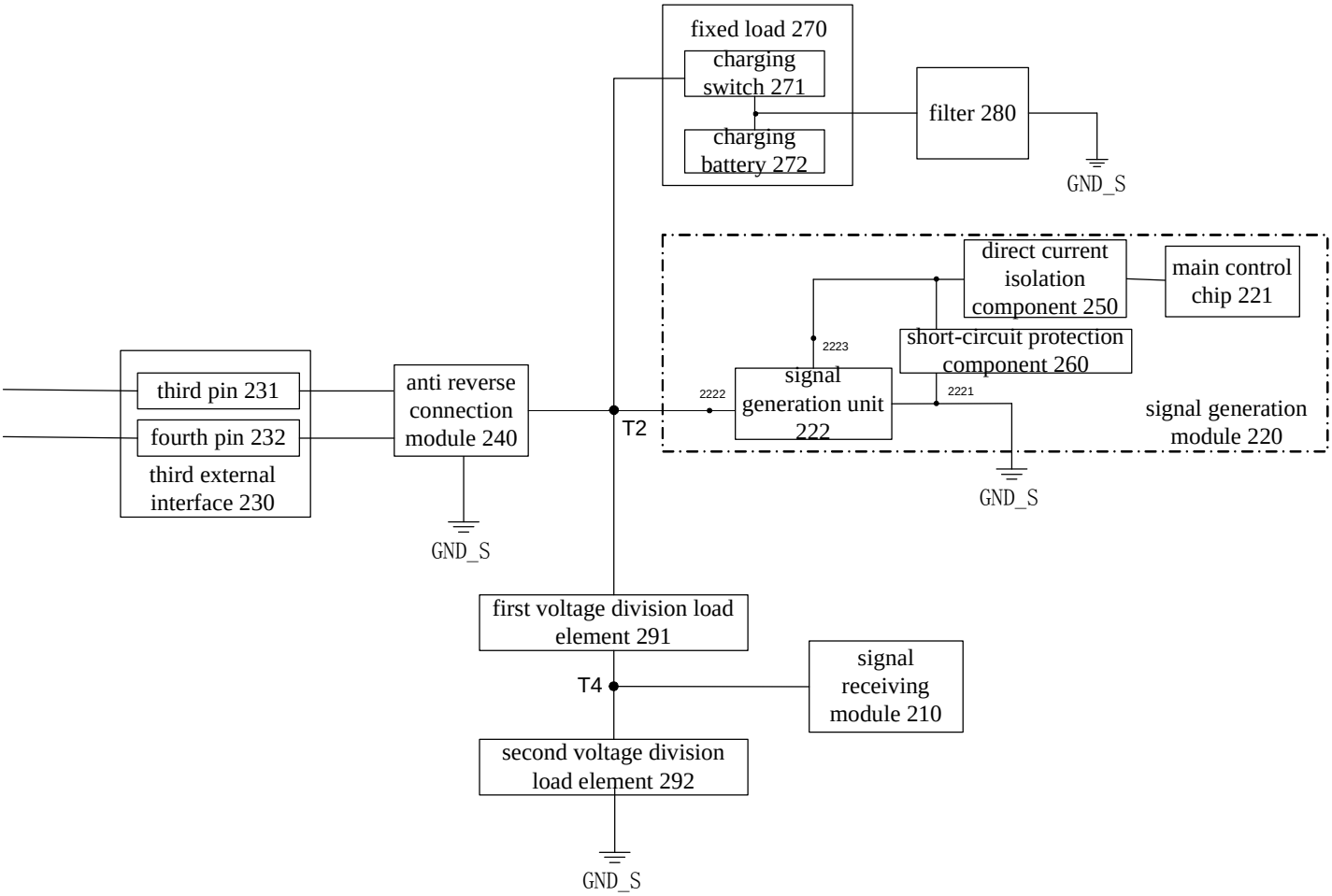
fixed load 270
charging switch 271
charging battery 272
filter 280
GND_S
direct current isolation component 250
main control chip 221
short-circuit protection component 260
2223
2222
signal generation unit 222
2221
signal generation module 220
GND_S
third pin 231
fourth pin 232
third external interface 230
anti reverse connection module 240
T2
GND_S
first voltage division load element 291
T4
signal receiving module 210
second voltage division load element 292
GND_S

Fig. 12

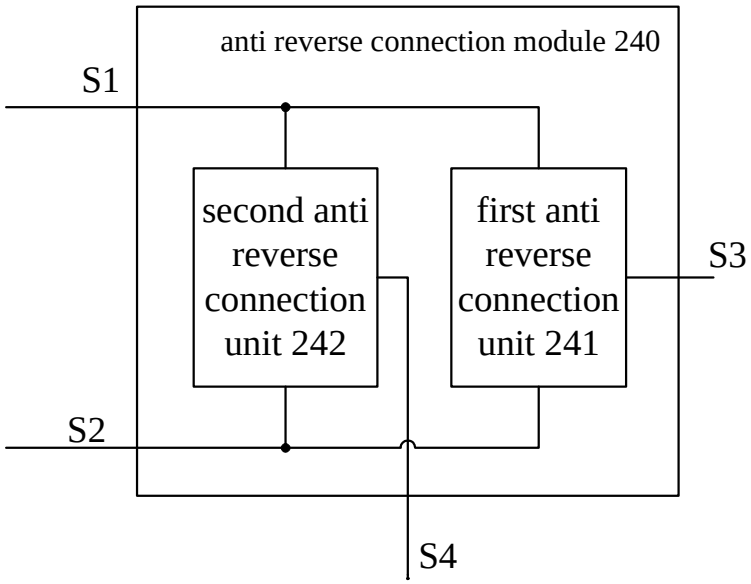
anti reverse connection module 240
S1
second anti reverse connection unit 242
first anti reverse connection unit 241
S3
S2
S4

Fig. 13

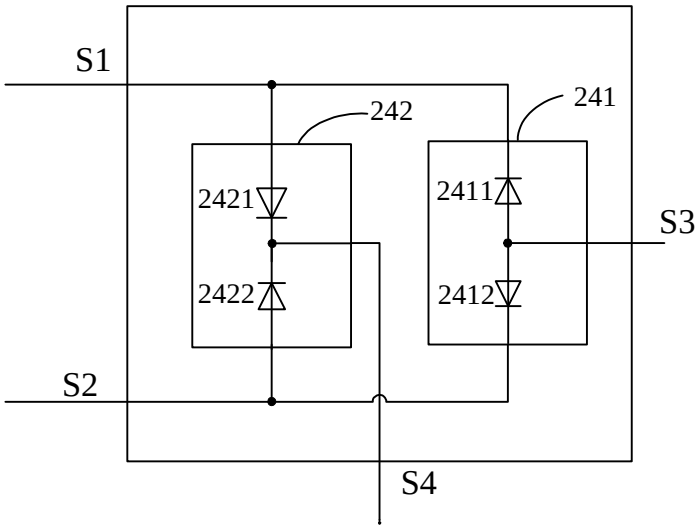
S1
242
241
2421
2411
S3
2422
2412
S2
S4

Fig. 14

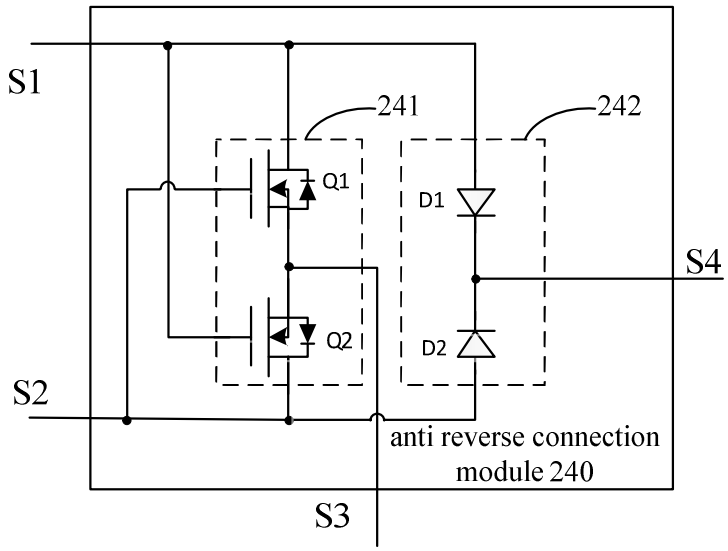

Fig. 14A

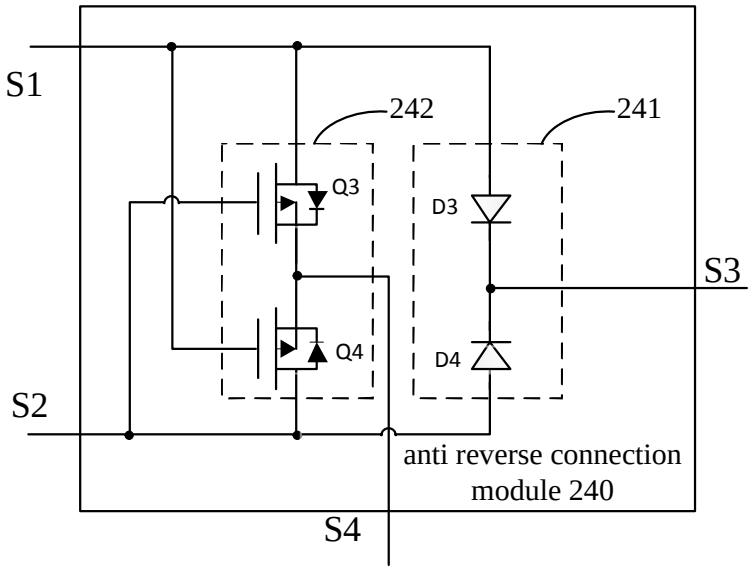

Fig. 14B

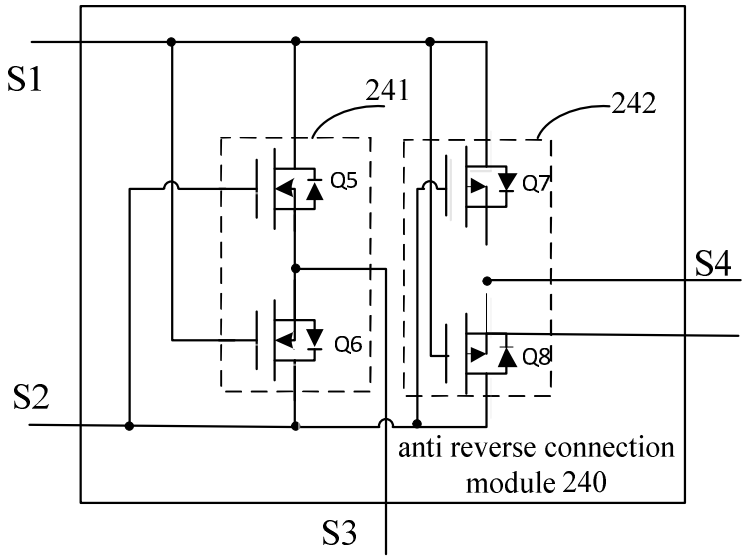
S1
241
242
Q5
Q7
S4
Q6
Q8
S2
anti reverse connection
module 240
S3

Fig. 14C

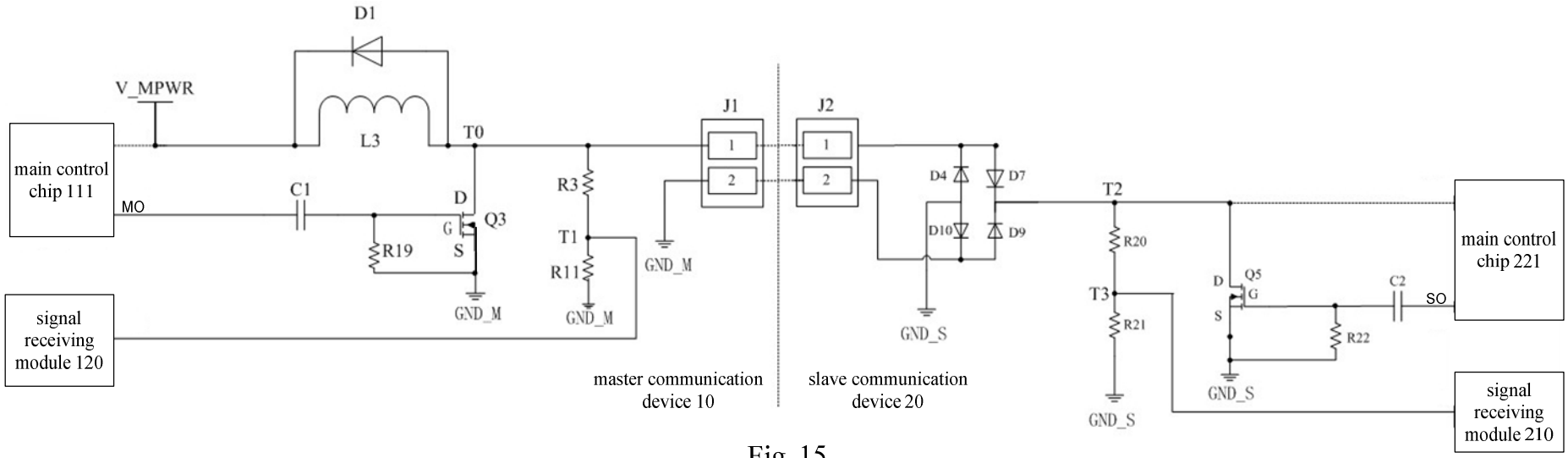
D1
V_MPWR
L3
T0
main control chip 111
MO
C1
D
Q3
G
S
R19
GND_M
signal receiving module 120
R3
T1
R11
GND_M
GND_M
J1
1
2
J2
1
2
D4
D7
D10
D9
GND_S
T2
R20
T3
R21
GND_S
D
Q5
G
S
R22
GND_S
C2
SO
main control chip 221
signal receiving module 210
master communication device 10
slave communication device 20

Fig. 15

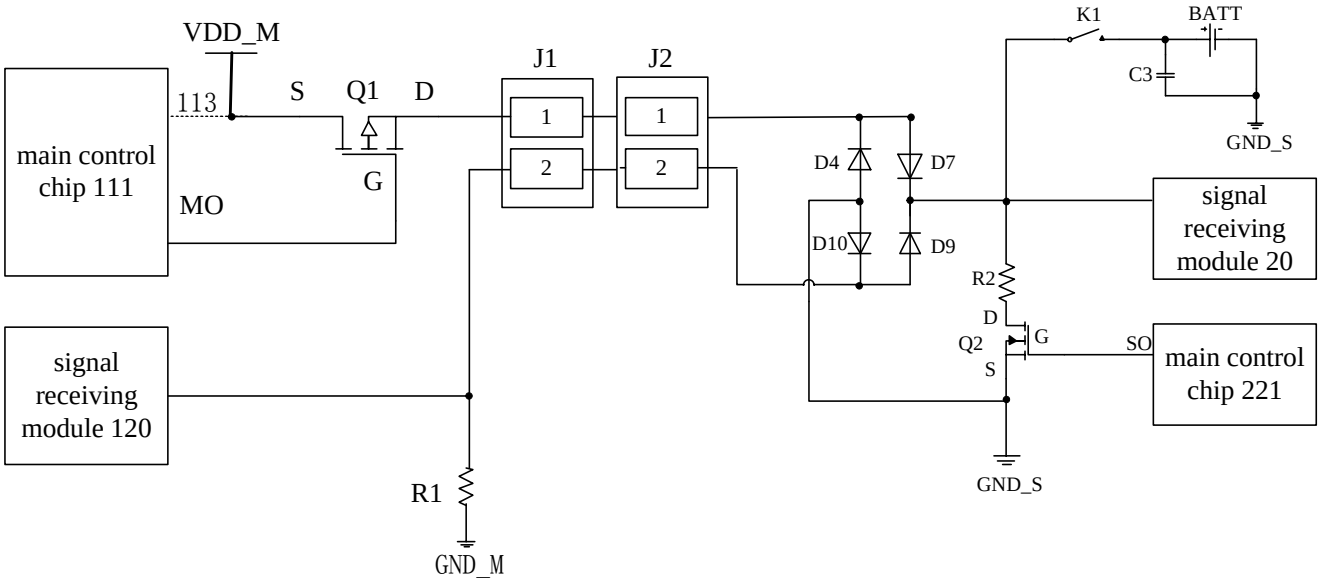
VDD_M
113
S
Q1
D
G
MO
main control chip 111
signal receiving module 120
R1
GND_M
J1
J2
1
2
1
2
D4
D7
D10
D9
K1
BATT
C3
GND_S
signal receiving module 20
R2
D
Q2
G
S
SO
main control chip 221
GND_S

Fig. 16