(12) INTERNATIONAL APPLICATION PUBLISHED UNDER THE PATENT COOPERATION TREATY (PCT)

(19) World Intellectual Property Organization
International Bureau

(43) International Publication Date
21 May 2015 (21.05.2015)

WIPO | PCT

(10) International Publication Number
WO 2015/071501 A3

(51) International Patent Classification:
F17C 13/08 (2006.01)

(21) International Application Number:
PCT/EP2014/074943

(22) International Filing Date:
18 November 2014 (18.11.2014)

(25) Filing Language: English

(26) Publication Language: English

(30) Priority Data:
61/905,314 18 November 2013 (18.11.2013) US
14/540,419 13 November 2014 (13.11.2014) US

(71) Applicant: **LINDE AKTIENGESELLSCHAFT** [DE/DE]; Klosterhofstr. 1, 80331 Muenchen (DE).

(72) Inventor: **CARLANDER-REUTERFELT, Christer**; Staregatan 1B, S-426 69 Västra Frölunda, Gothenburg (SE).

(74) Agent: **RICHTER GERBAULET THIELEMANN HOFMANN PATENTANWAELTE PARTGMBB**; Sendlinger Str. 2 / III, 80331 Muenchen (DE).

(81) Designated States *(unless otherwise indicated, for every kind of national protection available)*: AE, AG, AL, AM, AO, AT, AU, AZ, BA, BB, BG, BH, BN, BR, BW, BY, BZ, CA, CH, CL, CN, CO, CR, CU, CZ, DE, DK, DM, DO, DZ, EC, EE, EG, ES, FI, GB, GD, GE, GH, GM, GT, HN, HR, HU, ID, IL, IN, IR, IS, JP, KE, KG, KN, KP, KR, KZ, LA, LC, LK, LR, LS, LU, LY, MA, MD, ME, MG, MK, MN, MW, MX, MY, MZ, NA, NG, NI, NO, NZ, OM, PA, PE, PG, PH, PL, PT, QA, RO, RS, RU, RW, SA, SC, SD, SE, SG, SK, SL, SM, ST, SV, SY, TH, TJ, TM, TN, TR, TT, TZ, UA, UG, US, UZ, VC, VN, ZA, ZM, ZW.

(84) Designated States *(unless otherwise indicated, for every kind of regional protection available)*: ARIPO (BW, GH, GM, KE, LR, LS, MW, MZ, NA, RW, SD, SL, ST, SZ, TZ, UG, ZM, ZW), Eurasian (AM, AZ, BY, KG, KZ, RU, TJ, TM), European (AL, AT, BE, BG, CH, CY, CZ, DE, DK, EE, ES, FI, FR, GB, GR, HR, HU, IE, IS, IT, LT, LU, LV, MC, MK, MT, NL, NO, PL, PT, RO, RS, SE, SI, SK,

[Continued on next page]

(54) Title: COLD-BOX APPARATUS AND COLD-BOX SYSTEM

FIG. 1

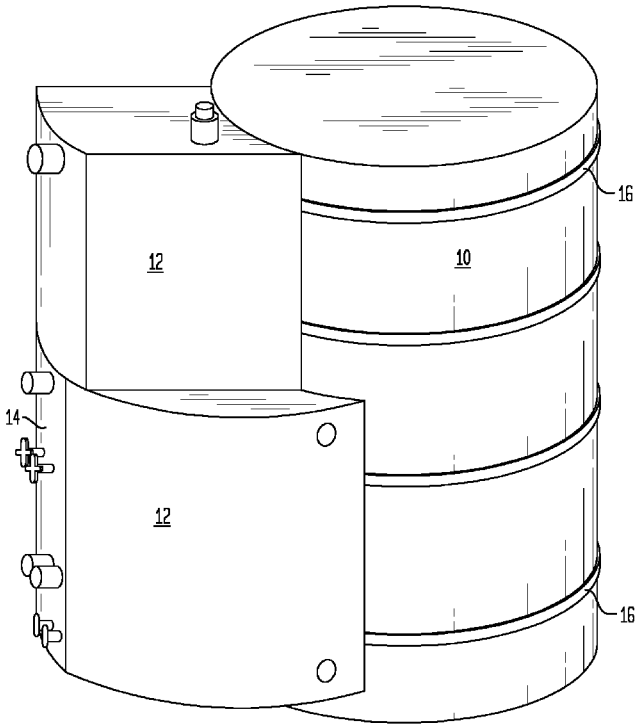

(57) Abstract: In order to improve the operation of a bulk gas tank (10; 110; 210), a cold-box apparatus is proposed, comprising a plurality of cold-box compartments (12, 14; 112, 114; 212, 214) operationally associated with the bulk gas tank (10; 110; 210). A corresponding cold-box system is also proposed, comprising such cold-box apparatus and the bulk gas tank (10; 110; 210).

WO 2015/071501 A3

SM, TR), OAPI (BF, BJ, CF, CG, CI, CM, GA, GN, GQ, GW, KM, ML, MR, NE, SN, TD, TG).

Published:

— *with international search report (Art. 21(3))*

— *before the expiration of the time limit for amending the claims and to be republished in the event of receipt of amendments (Rule 48.2(h))*

(88) Date of publication of the international search report:
27 August 2015