FIG. 1

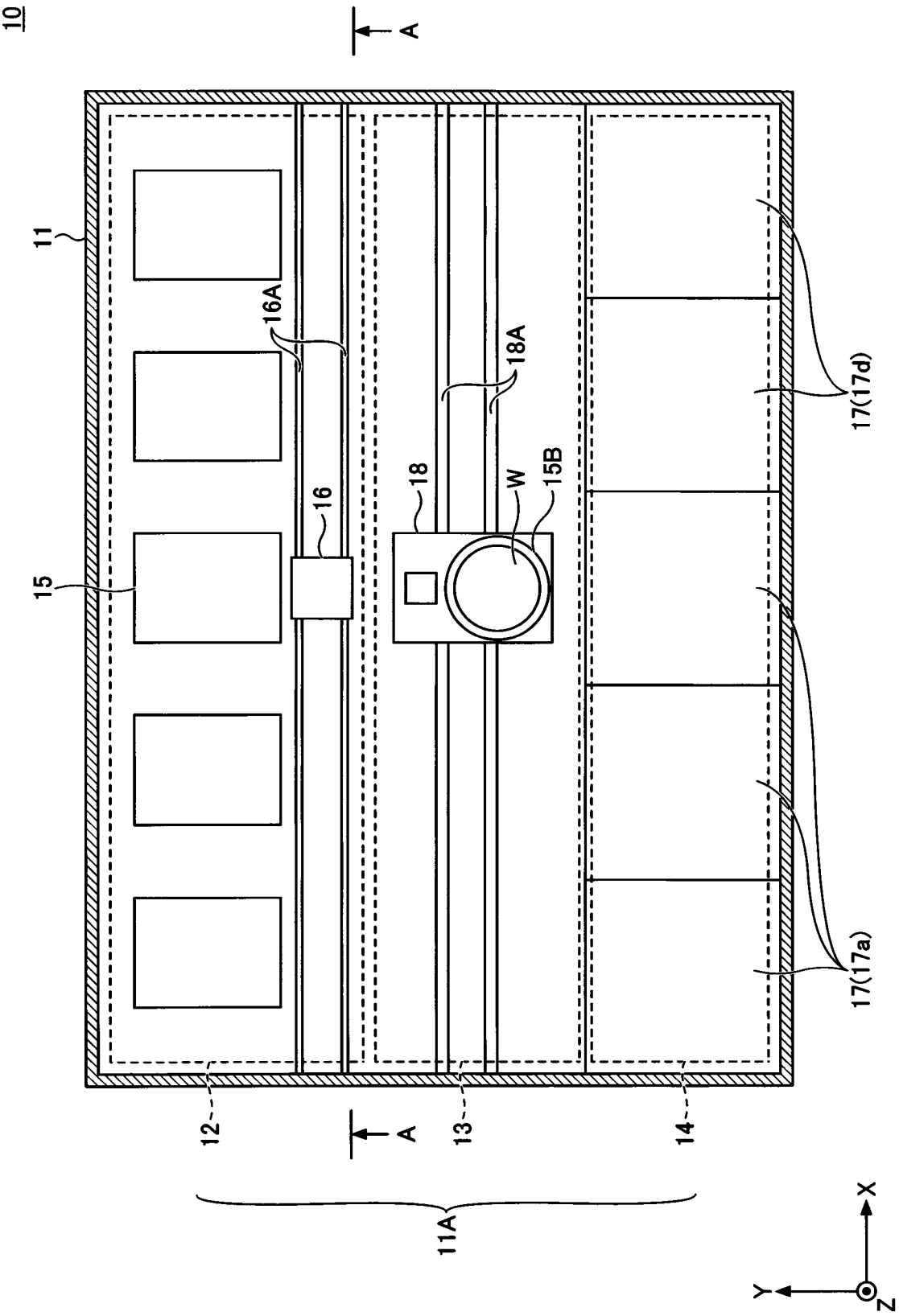

FIG. 2

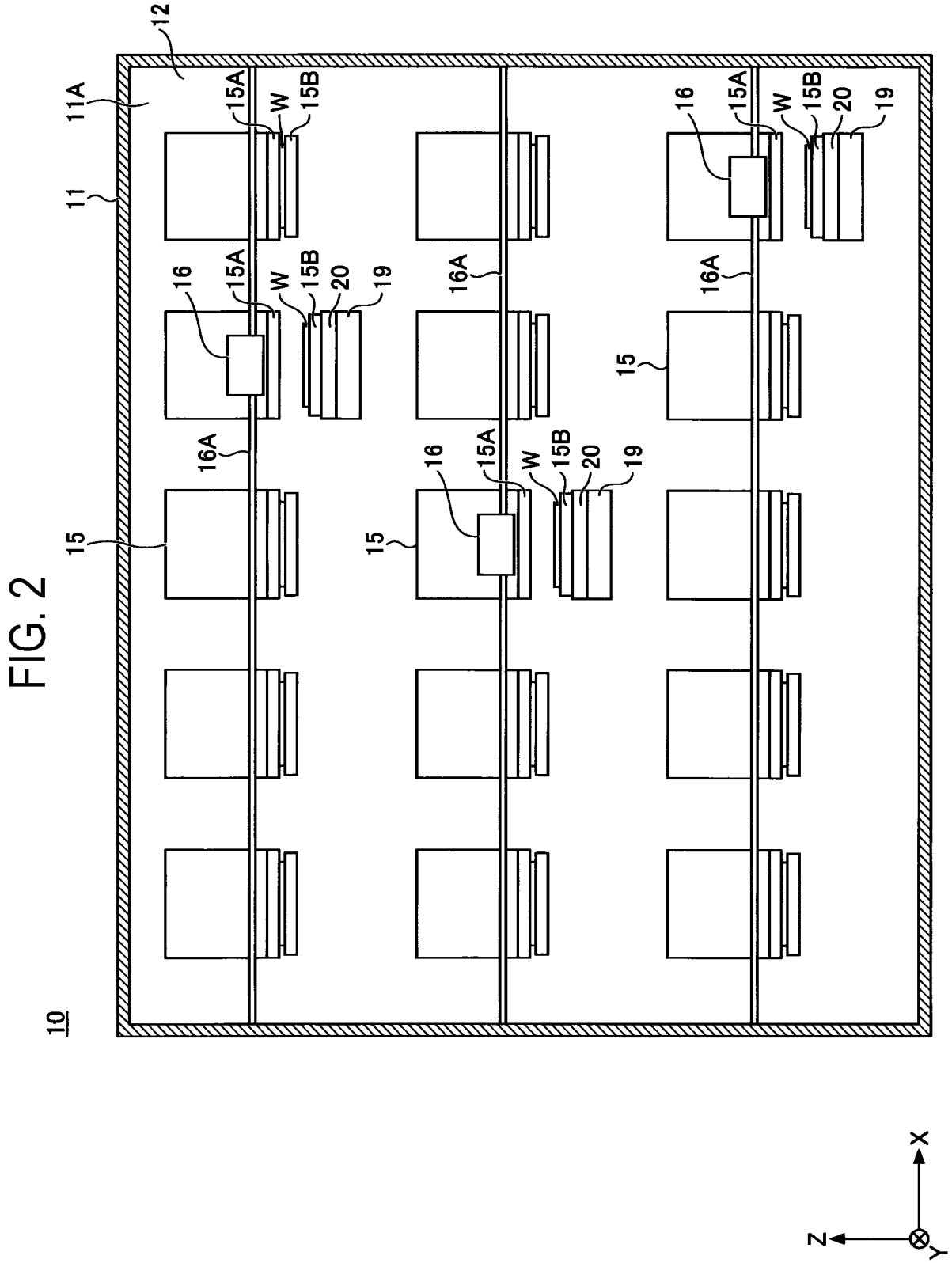

FIG. 3

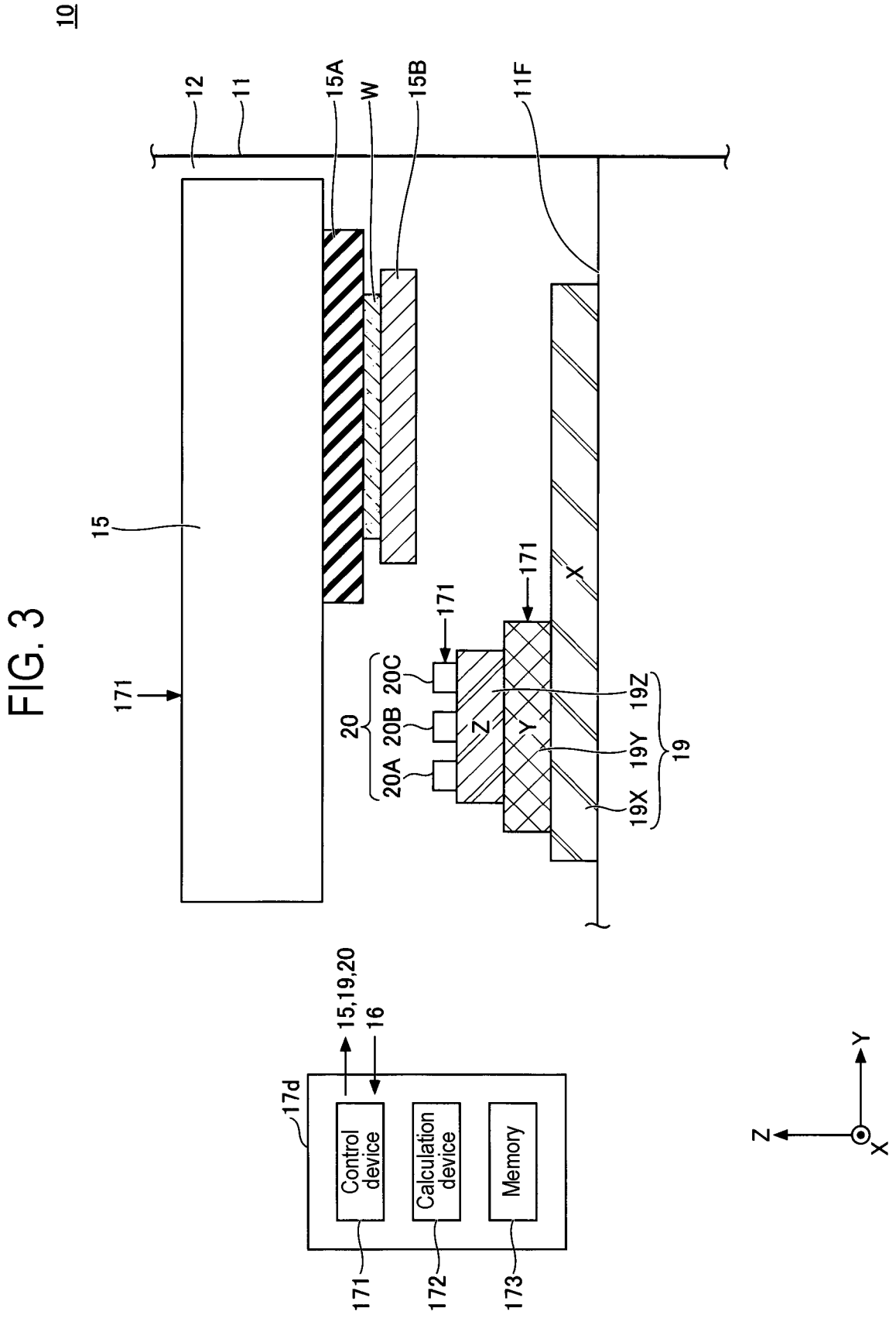
10
12
11
15A
W
15B
11F
15
171
171
171
X
20
20C
20B
20A
Z
Y
19Z
19Y
19X
19
15,19,20
16
17d
Control device
Calculation device
Memory
171
172
173
Z
Y
X

FIG. 4

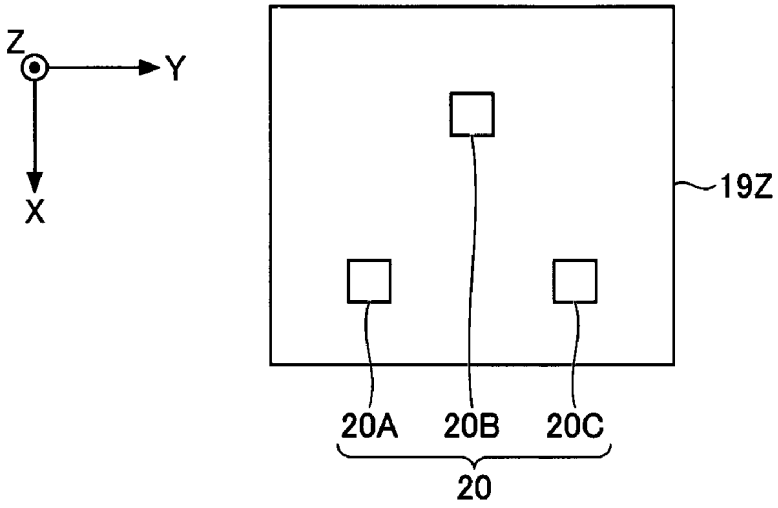

FIG. 5

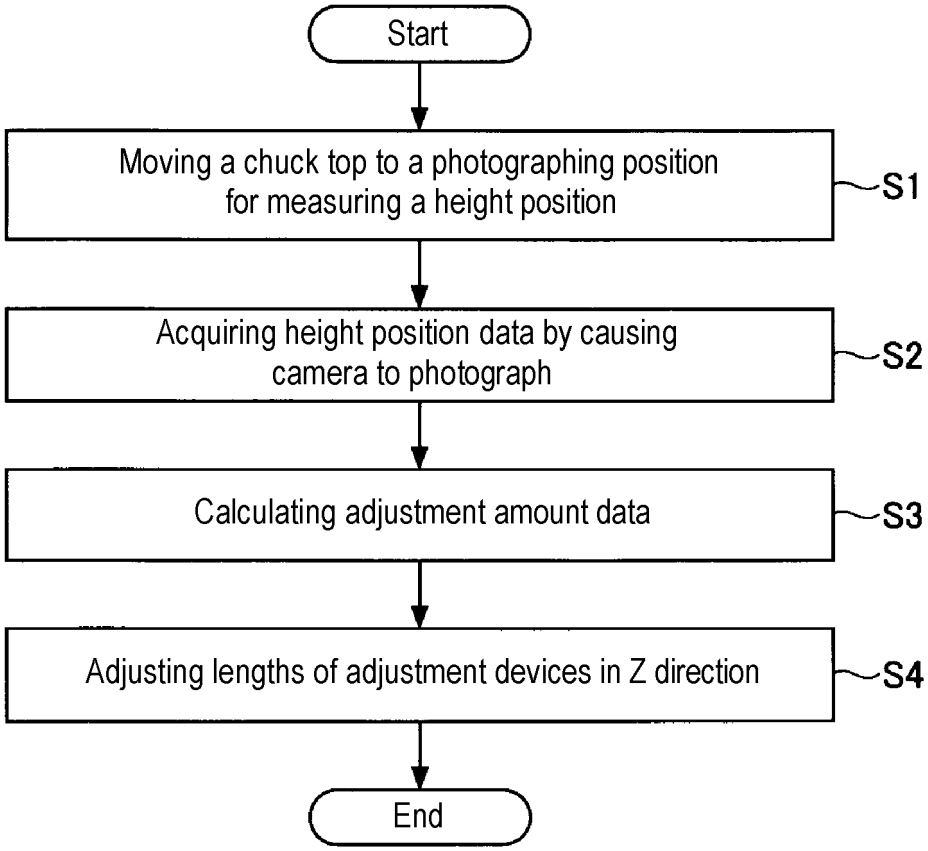
Start
Moving a chuck top to a photographing position for measuring a height position
S1
Acquiring height position data by causing camera to photograph
S2
Calculating adjustment amount data
S3
Adjusting lengths of adjustment devices in Z direction
S4
End