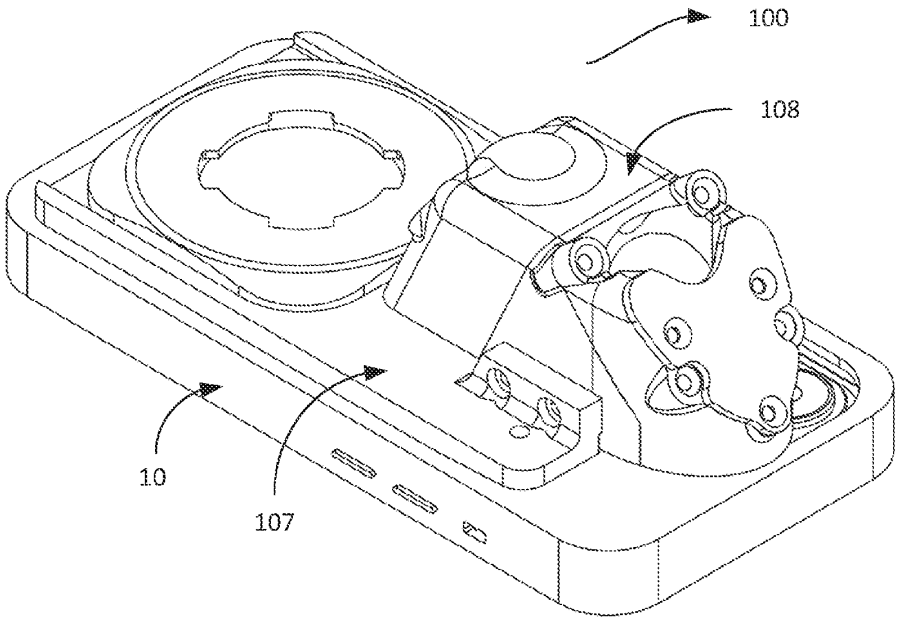

FIG. 1

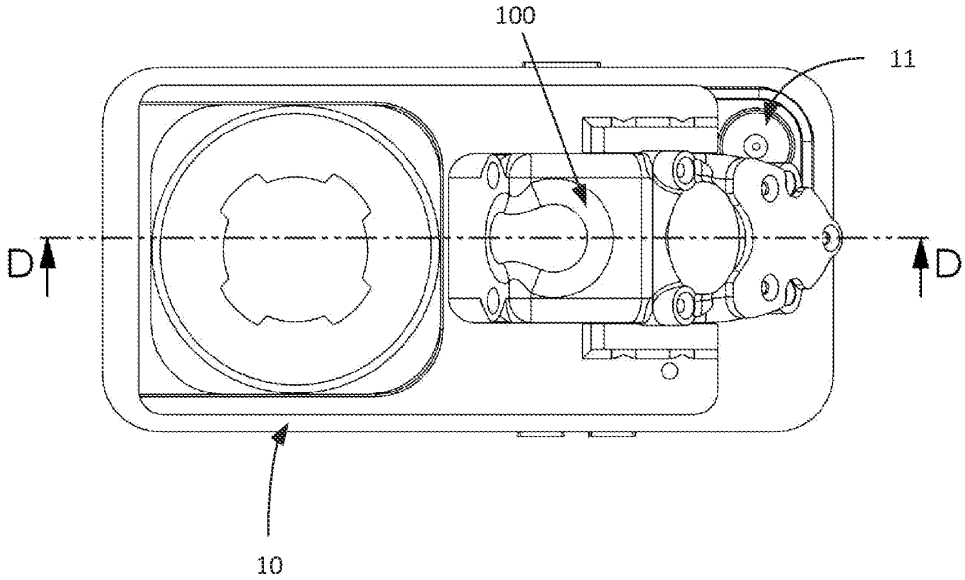

FIG. 2

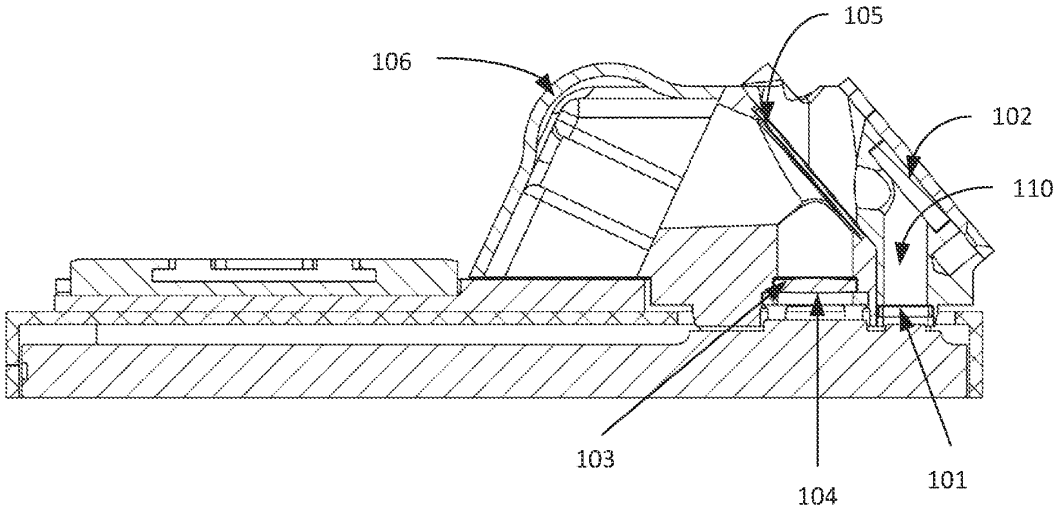

FIG. 3

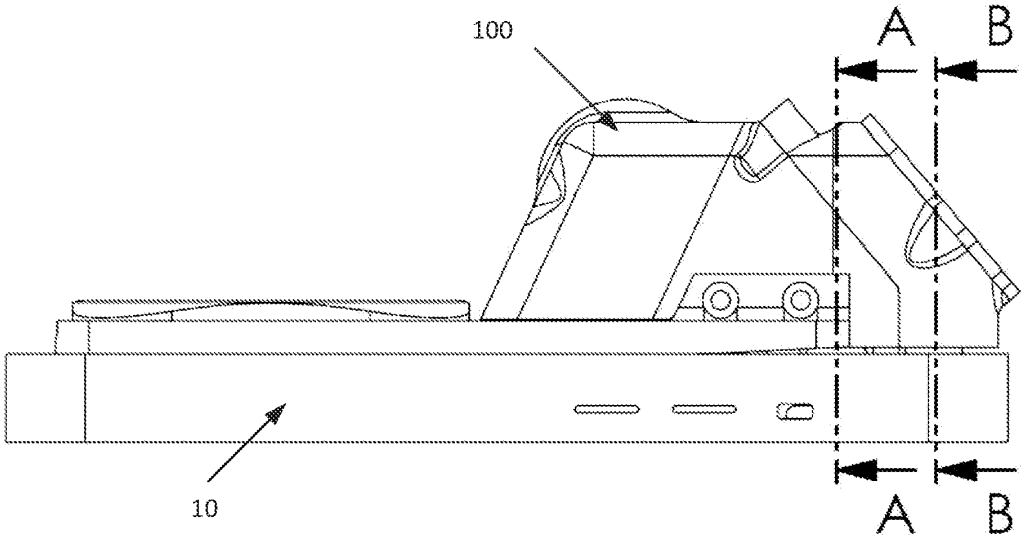

FIG. 4

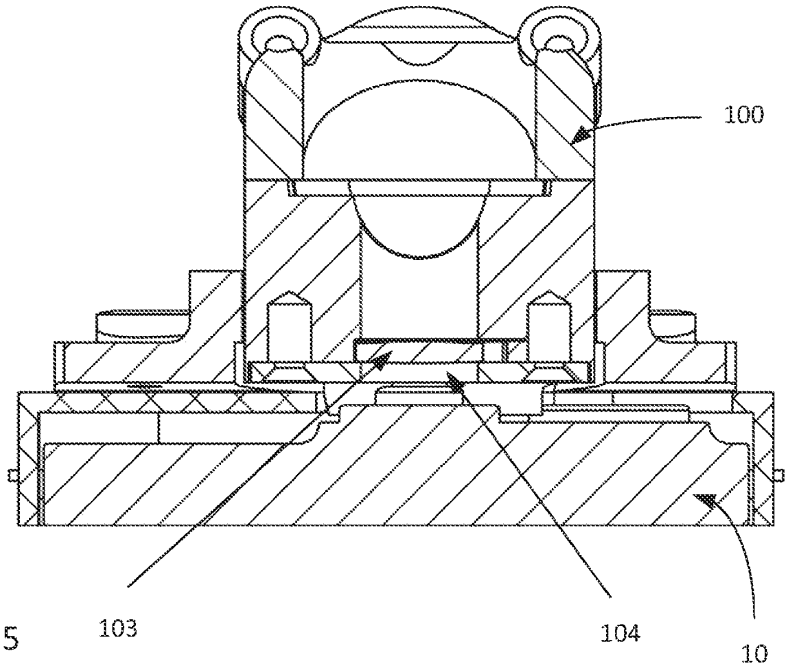

FIG. 5

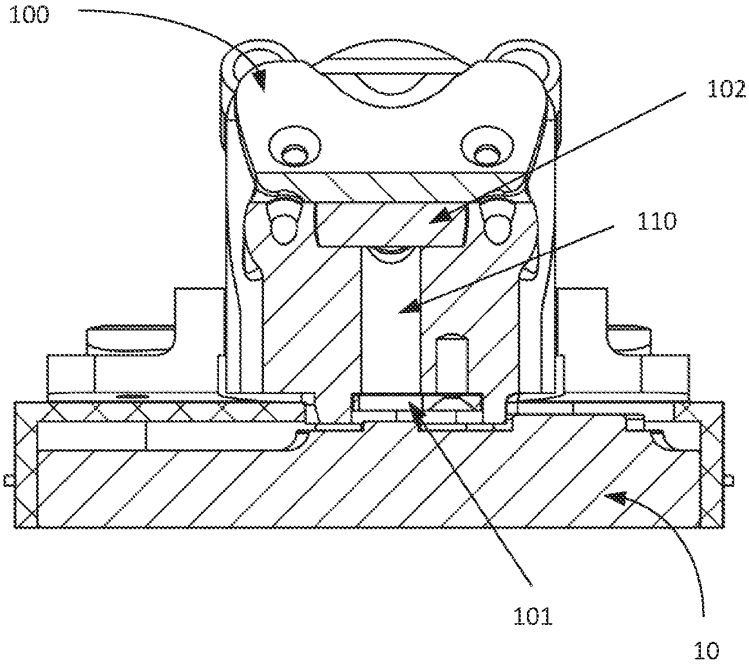

FIG. 6

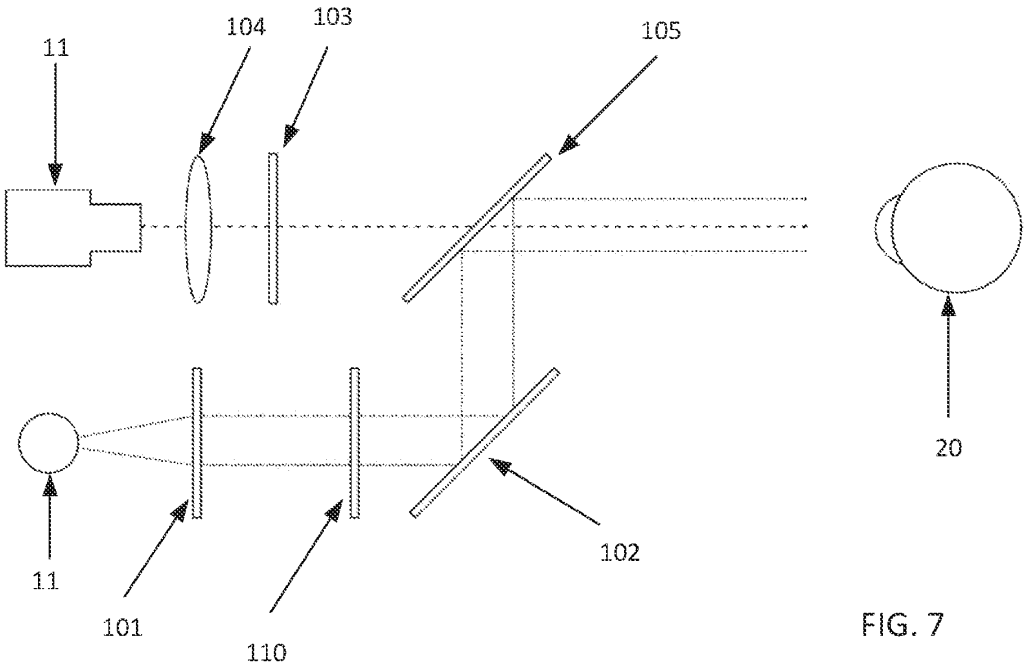
11
104
103
105
20
11
101
110
102

FIG. 7

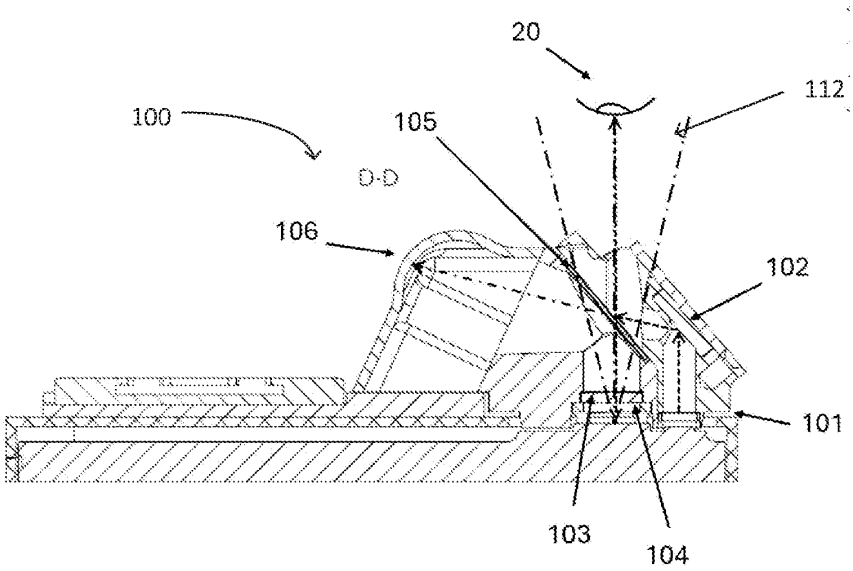
20
112
100
105
D-D
106
102
101
103
104

FIG. 8

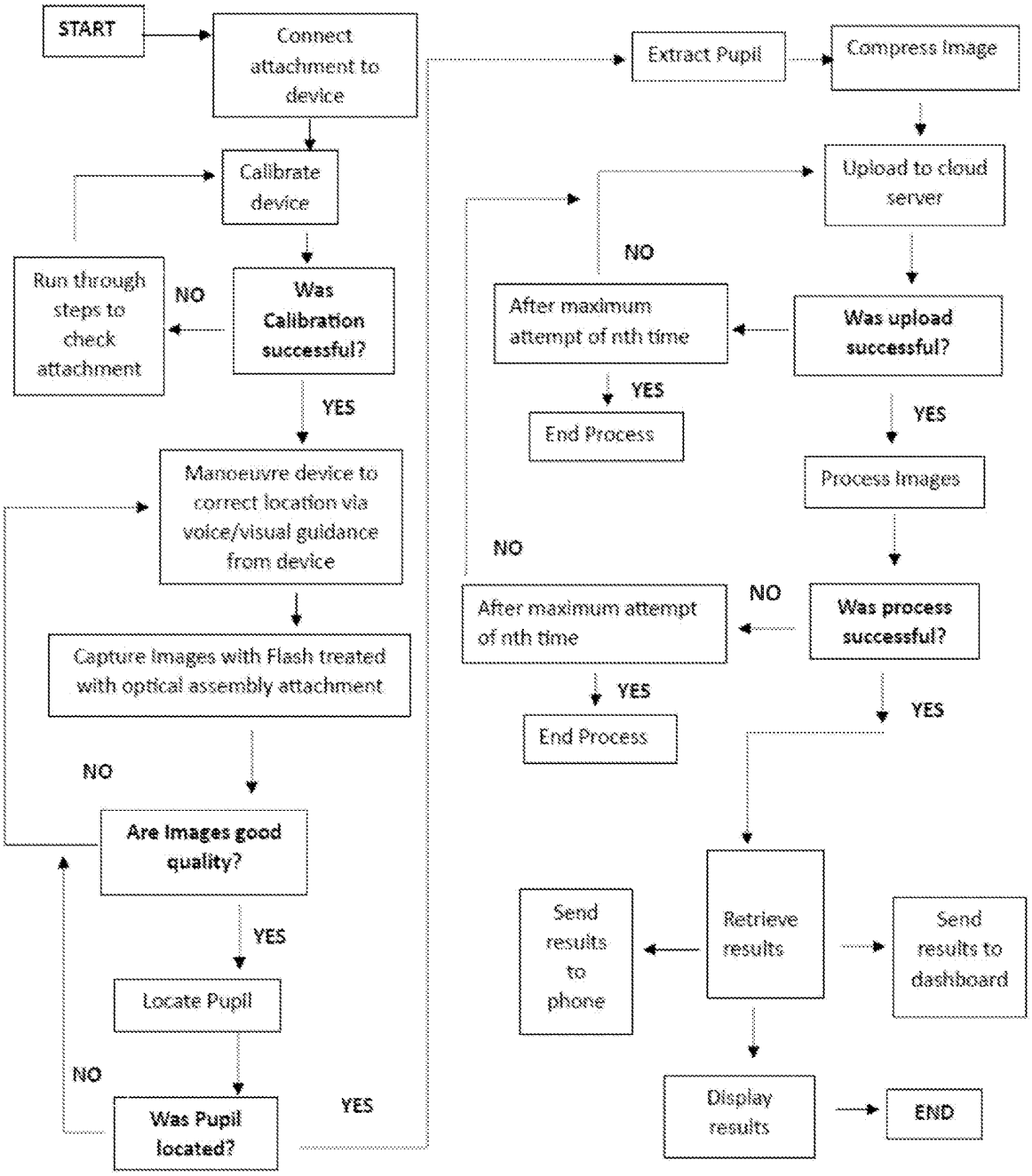
START
Connect attachment to device
Calibrate device
Was Calibration successful?
NO
Run through steps to check attachment
YES
Manoeuvre device to correct location via voice/visual guidance from device
Capture images with Flash treated with optical assembly attachment
NO
Are Images good quality?
YES
Locate Pupil
NO
Was Pupil located?
YES
Extract Pupil
Compress Image
Upload to cloud server
NO
After maximum attempt of nth time
YES
End Process
Was upload successful?
YES
Process Images
NO
After maximum attempt of nth time
YES
End Process
NO
Was process successful?
YES
Retrieve results
Send results to phone
Send results to dashboard
Display results
END

FIG. 9

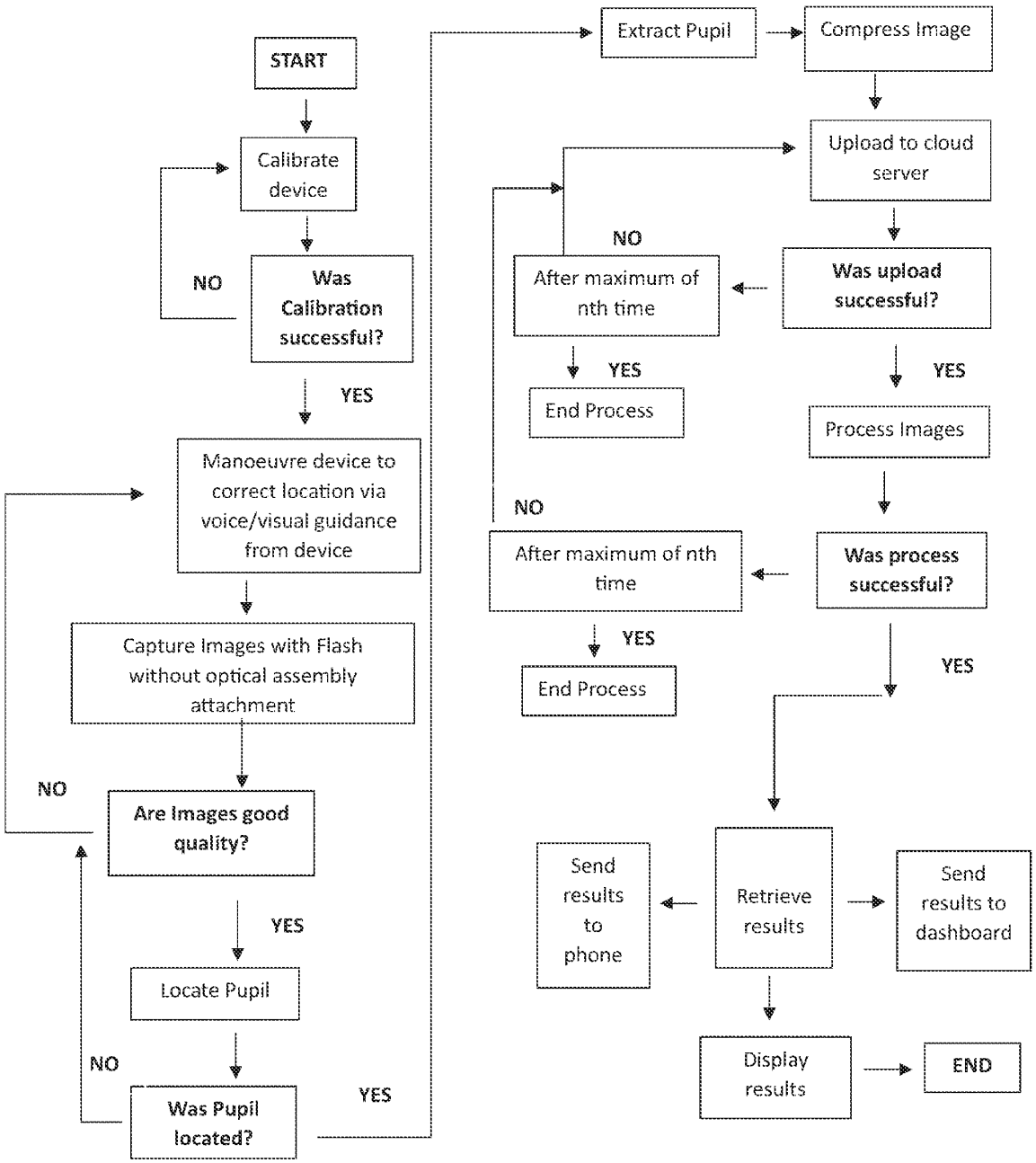
START
Calibrate device
NO
Was Calibration successful?
YES
Manoeuvre device to correct location via voice/visual guidance from device
Capture Images with Flash without optical assembly attachment
NO
Are Images good quality?
YES
Locate Pupil
NO
Was Pupil located?
YES
Extract Pupil
Compress Image
Upload to cloud server
NO
After maximum of nth time
Was upload successful?
YES
End Process
YES
Process Images
NO
After maximum of nth time
Was process successful?
YES
End Process
YES
Send results to phone
Retrieve results
Send results to dashboard
Display results
END

FIG. 10

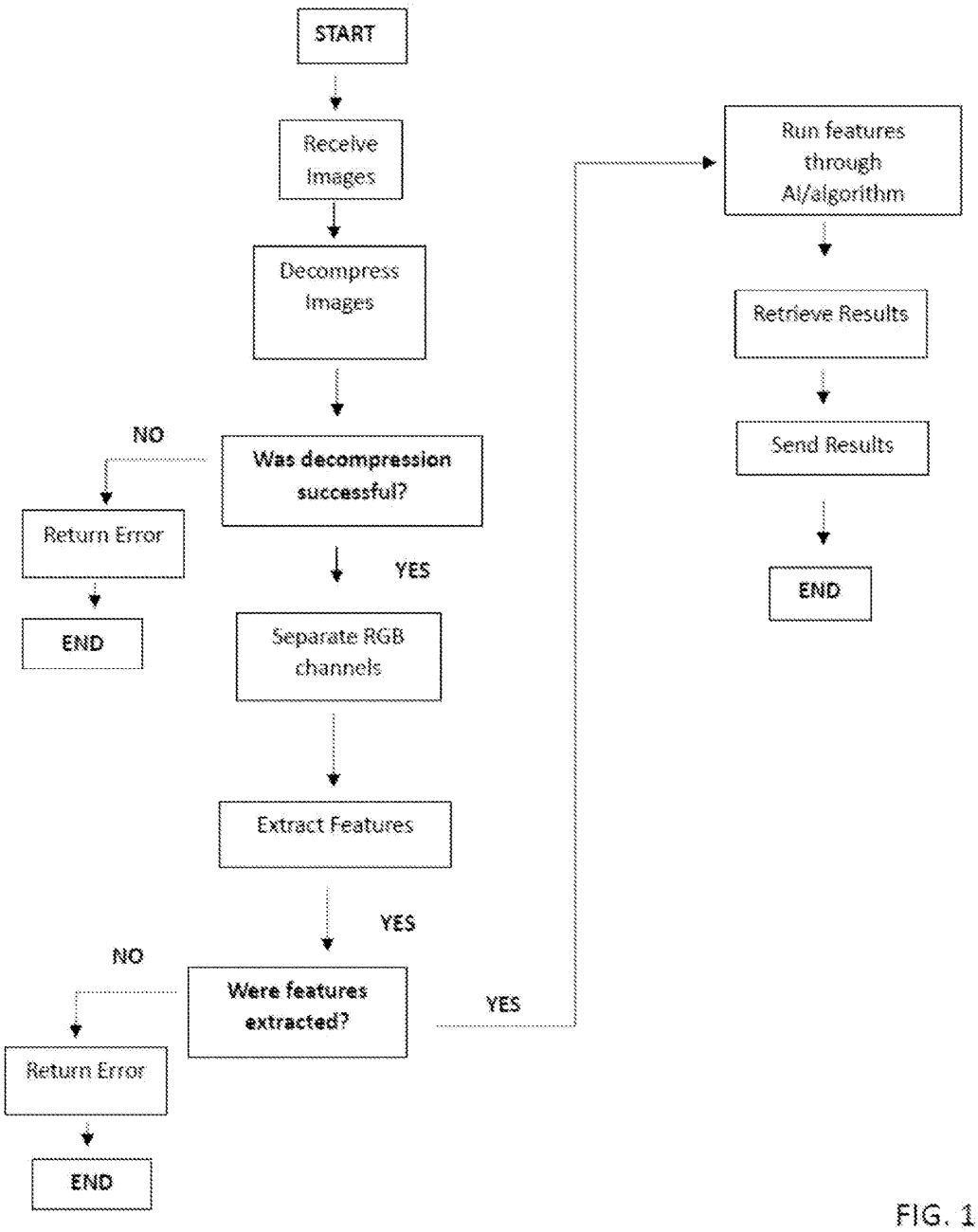
START
Receive Images
Decompress Images
Was decompression successful?
NO
Return Error
END
YES
Separate RGB channels
Extract Features
YES
Were features extracted?
NO
Return Error
END
YES
Run features through AI/algorithm
Retrieve Results
Send Results
END

FIG. 11

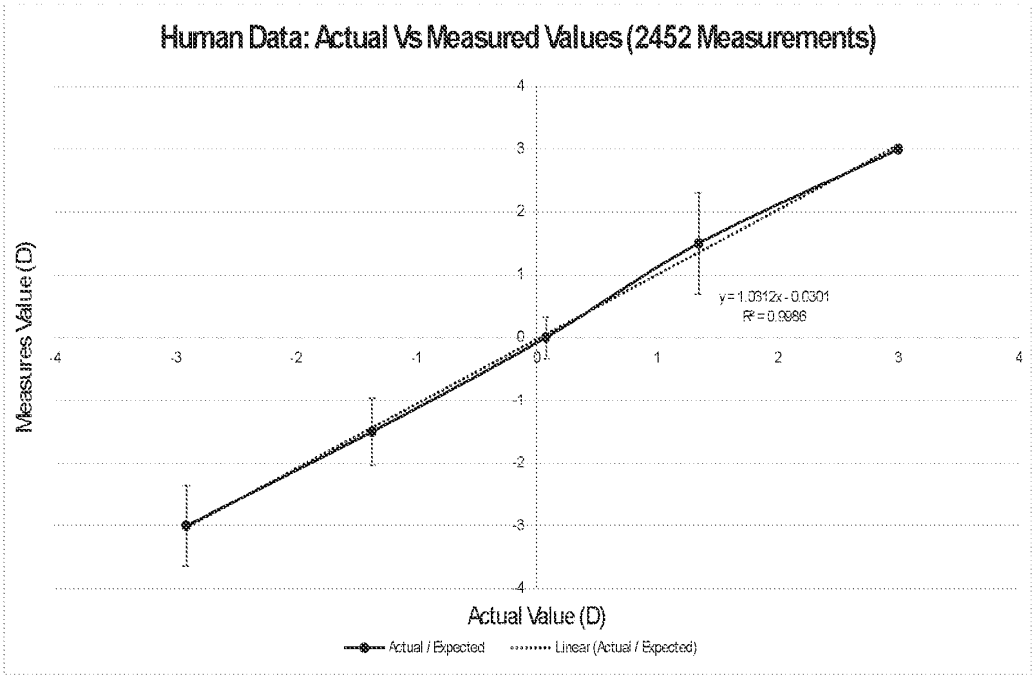
Human Data: Actual Vs Measured Values (2452 Measurements)
Measures Value (D)
Actual Value (D)
y = 1.0312x - 0.0301
R² = 0.9986
Actual / Expected
Linear (Actual / Expected)

FIG. 12

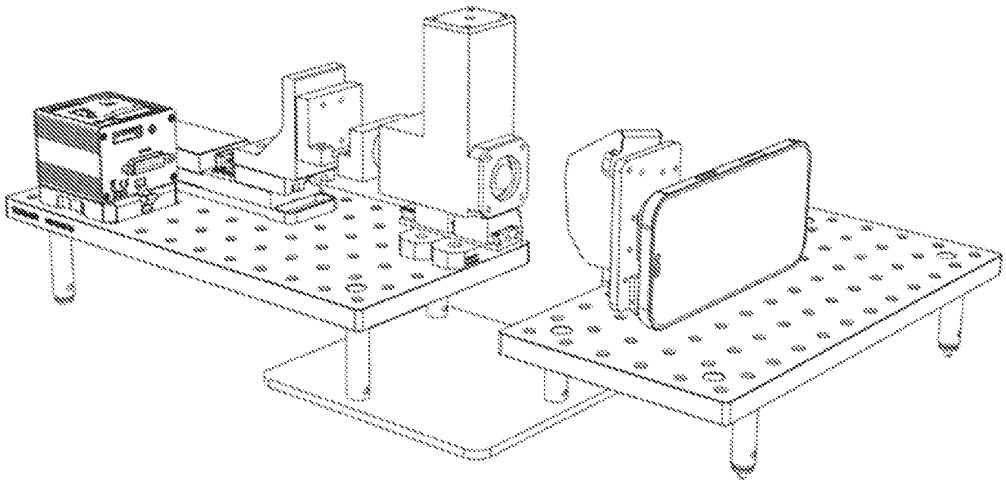

FIG. 13

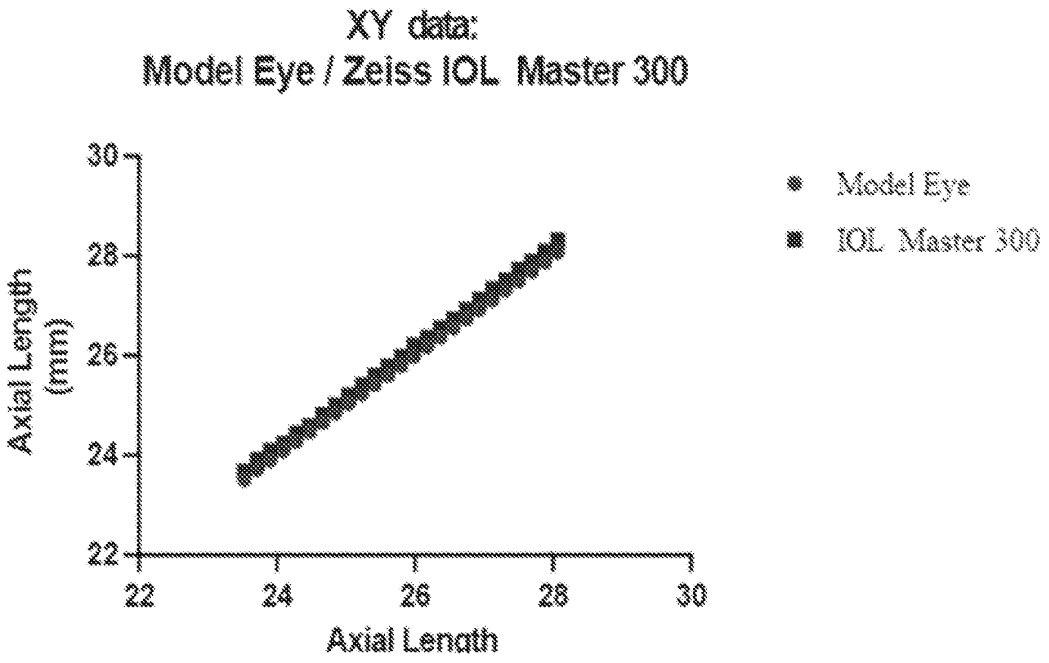
XY data:
Model Eye / Zeiss IOL Master 300
Model Eye
IOL Master 300
Axial Length (mm)
30
28
26
24
22
22
24
26
28
30
Axial Length

FIG. 14

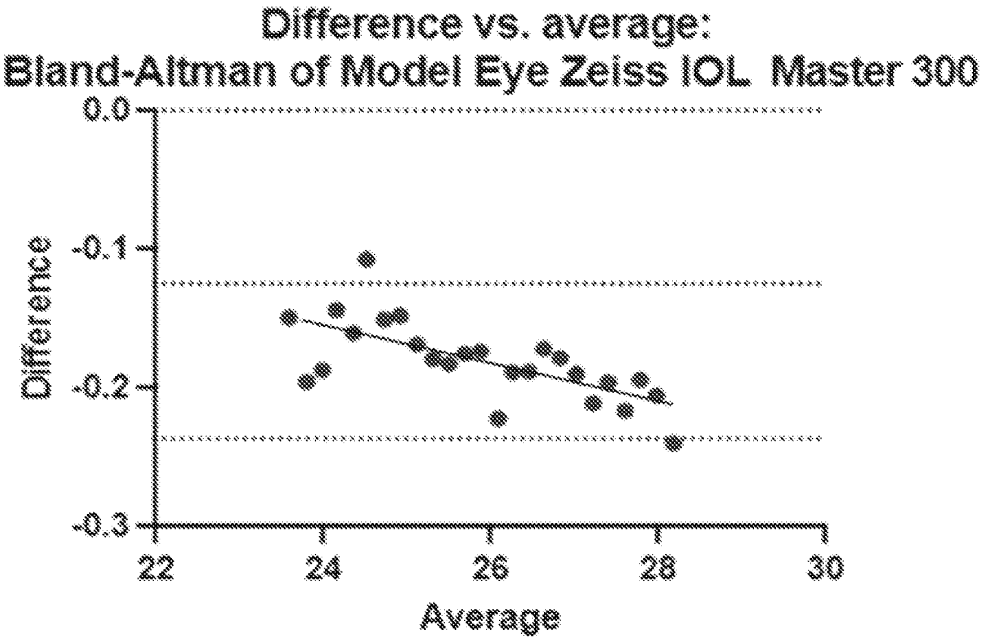
Difference vs. average:
Bland-Altman of Model Eye Zeiss IOL Master 300
Difference
0.0
-0.1
-0.2
-0.3
22
24
26
28
30
Average

FIG. 15

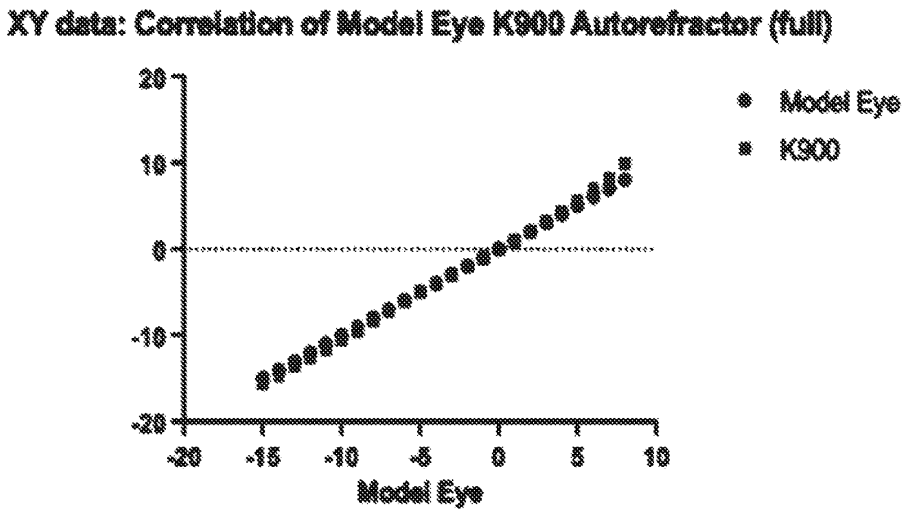
XY data: Correlation of Model Eye K900 Autorefractor (full)
Model Eye
K900
20
10
0
-10
-20
-20
-15
-10
-5
0
5
10
Model Eye

FIG. 16

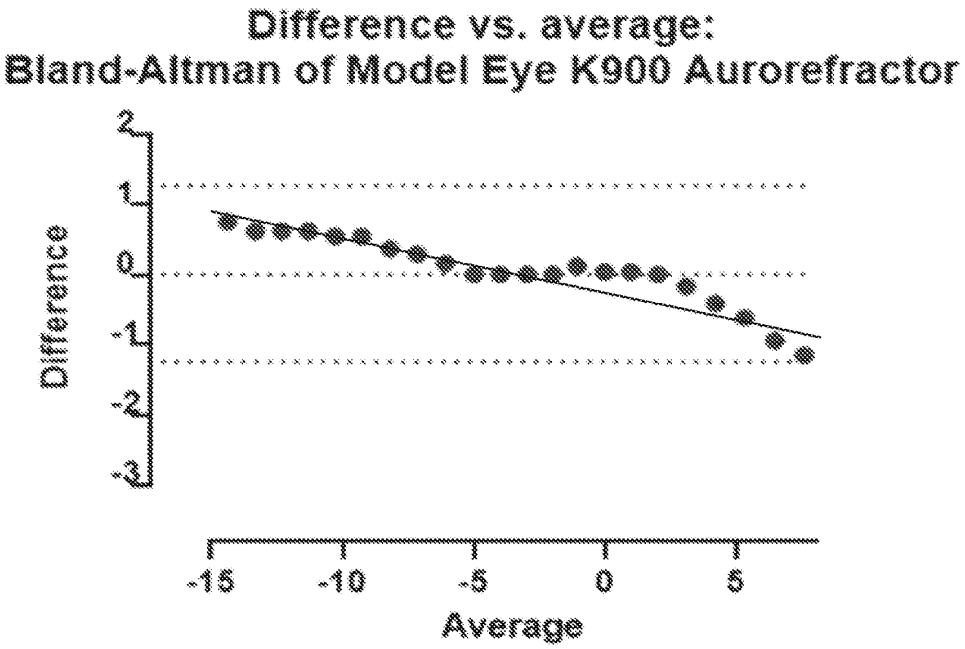
Difference vs. average:
Bland-Altman of Model Eye K900 Aurorefractor
Difference
2
1
0
-1
-2
-3
-15
-10
-5
0
5
Average

FIG. 17

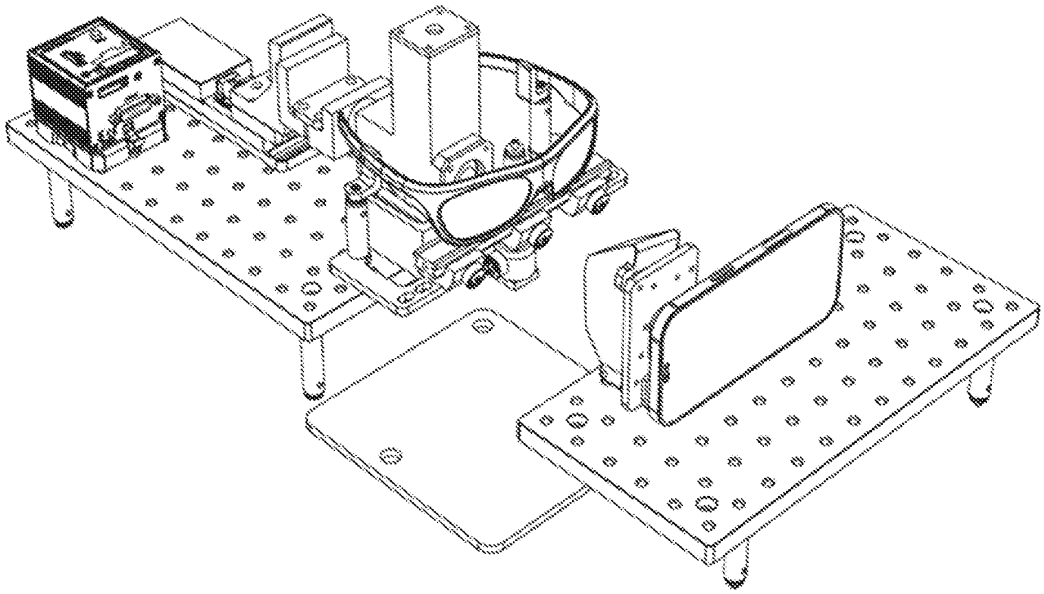

FIG. 18

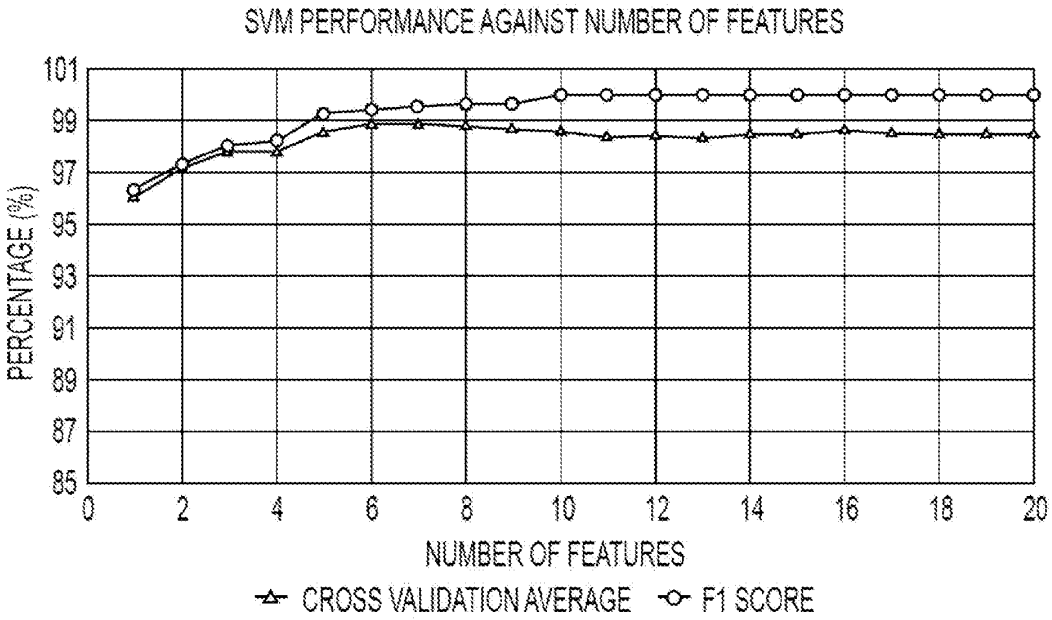
SVM PERFORMANCE AGAINST NUMBER OF FEATURES
PERCENTAGE (%)
101
99
97
95
93
91
89
87
85
0
2
4
6
8
10
12
14
16
18
20
NUMBER OF FEATURES
CROSS VALIDATION AVERAGE
F1 SCORE

FIG. 19

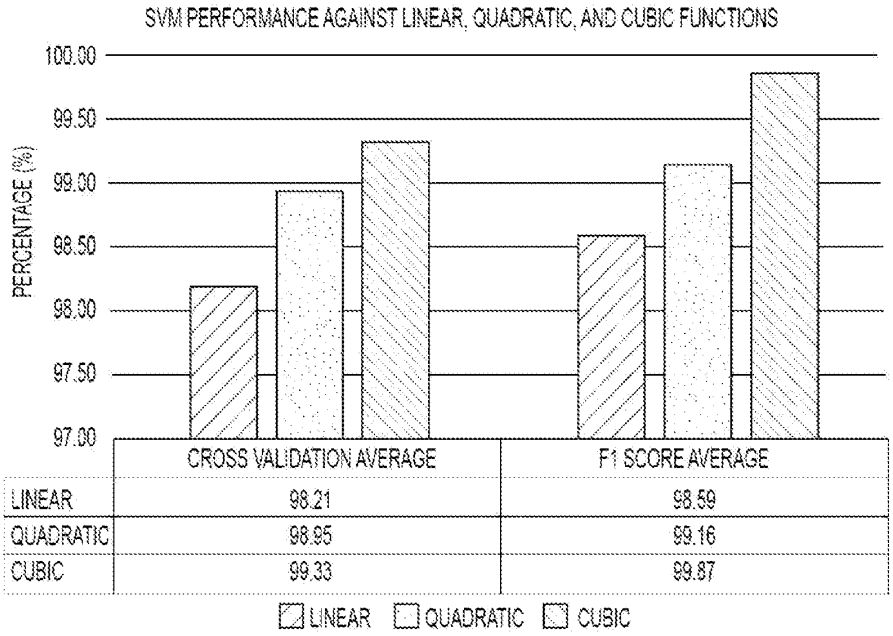
SVM PERFORMANCE AGAINST LINEAR, QUADRATIC, AND CUBIC FUNCTIONS
PERCENTAGE (%)
100.00
99.50
99.00
98.50
98.00
97.50
97.00
CROSS VALIDATION AVERAGE
F1 SCORE AVERAGE
LINEAR 98.21 98.59
QUADRATIC 98.95 99.16
CUBIC 99.33 99.87
LINEAR
QUADRATIC
CUBIC

FIG. 20

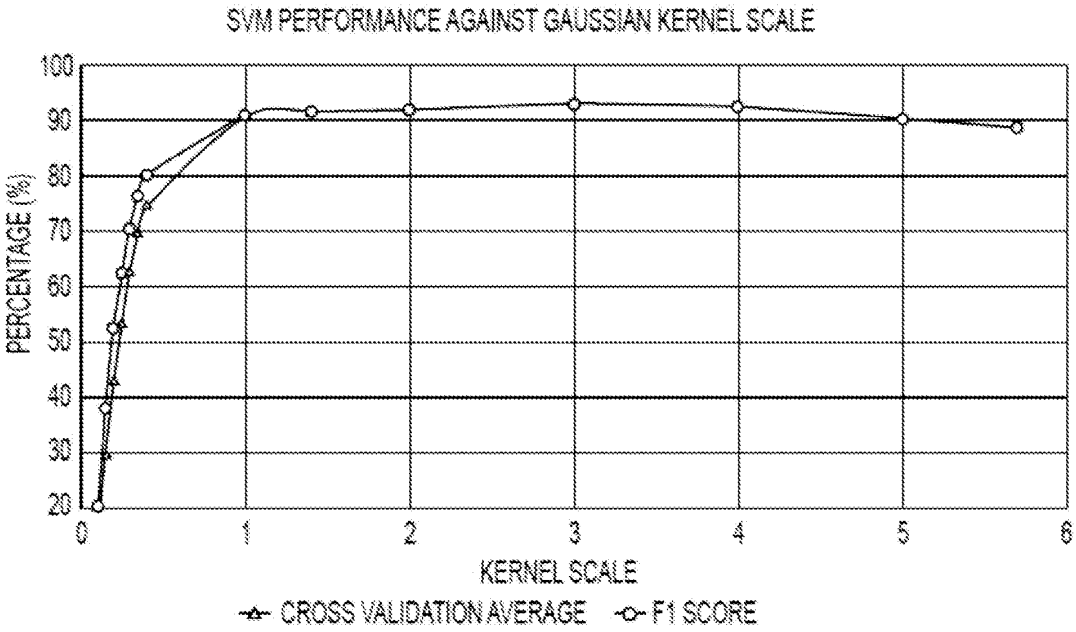
SVM PERFORMANCE AGAINST GAUSSIAN KERNEL SCALE
PERCENTAGE (%)
100
90
80
70
60
50
40
30
20
0
1
2
3
4
5
6
KERNEL SCALE
CROSS VALIDATION AVERAGE
F1 SCORE

FIG. 21

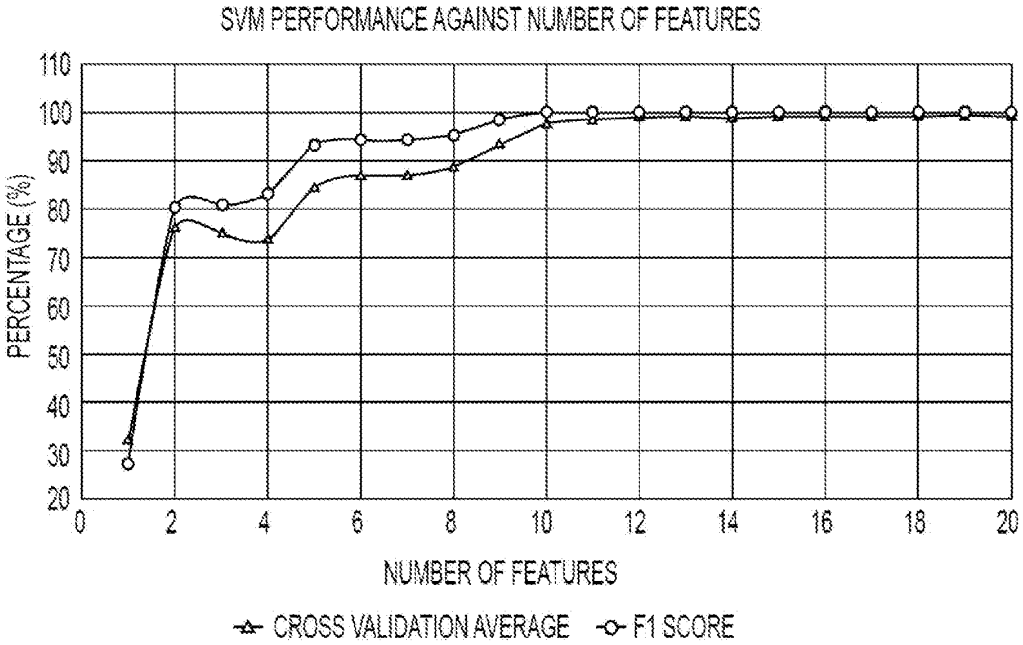

FIG. 22

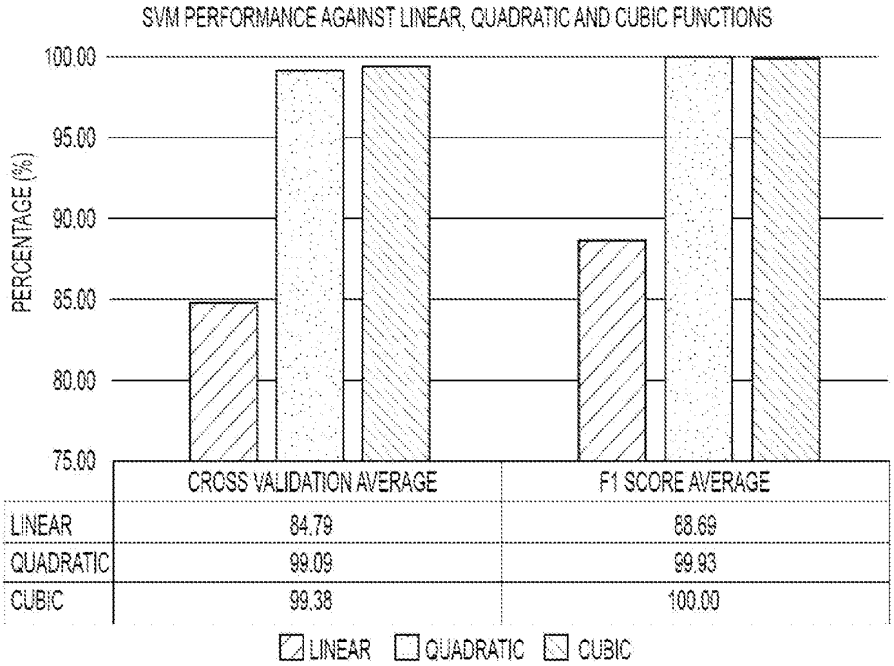

	CROSS VALIDATION AVERAGE	F1 SCORE AVERAGE
LINEAR	84.79	88.69
QUADRATIC	99.09	99.93
CUBIC	99.38	100.00

FIG. 23

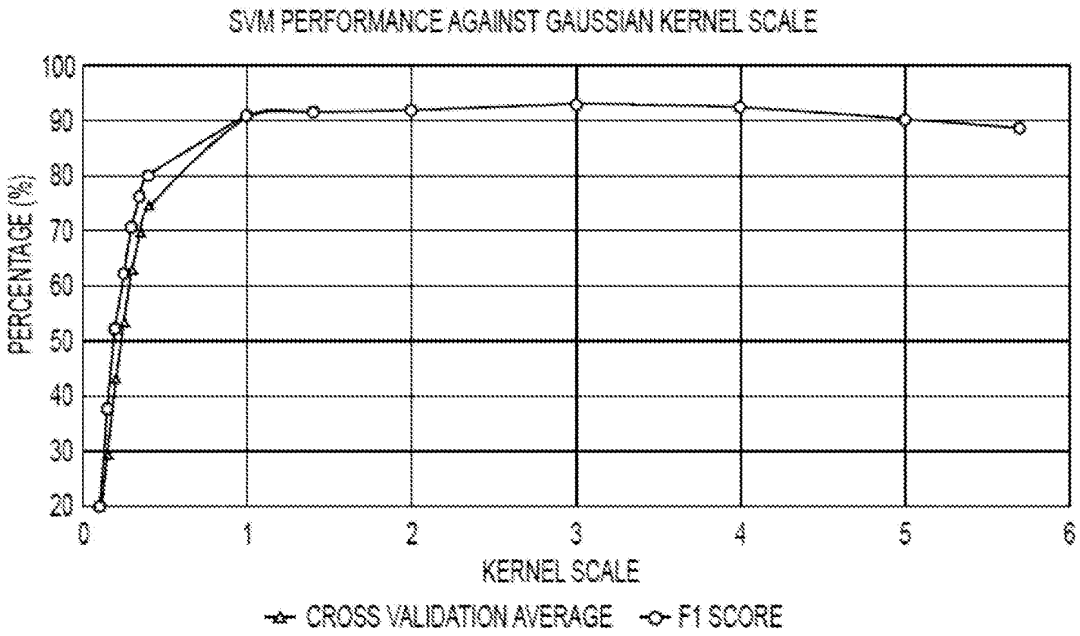
SVM PERFORMANCE AGAINST GAUSSIAN KERNEL SCALE
PERCENTAGE (%)
100
90
80
70
60
50
40
30
20
0
1
2
3
4
5
6
KERNEL SCALE
CROSS VALIDATION AVERAGE
F1 SCORE

FIG. 24