FIG. 1

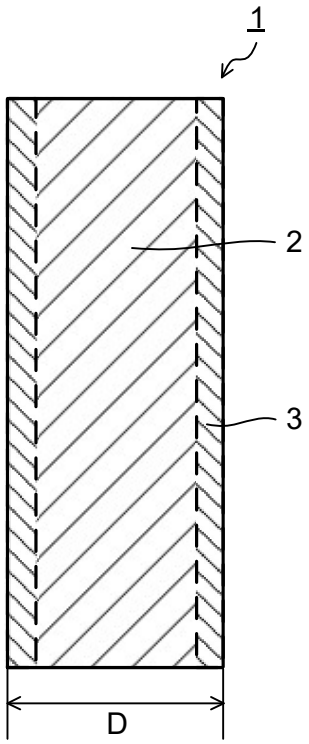

FIG. 2

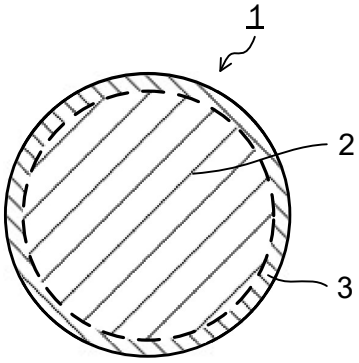

FIG. 3

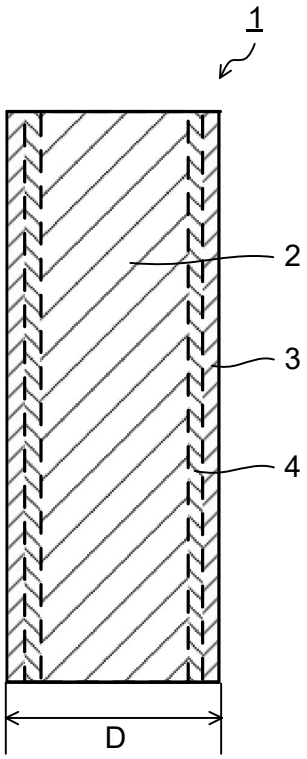

FIG. 4

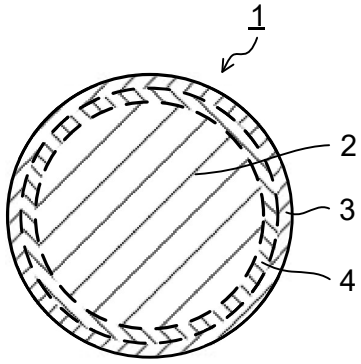

FIG. 5

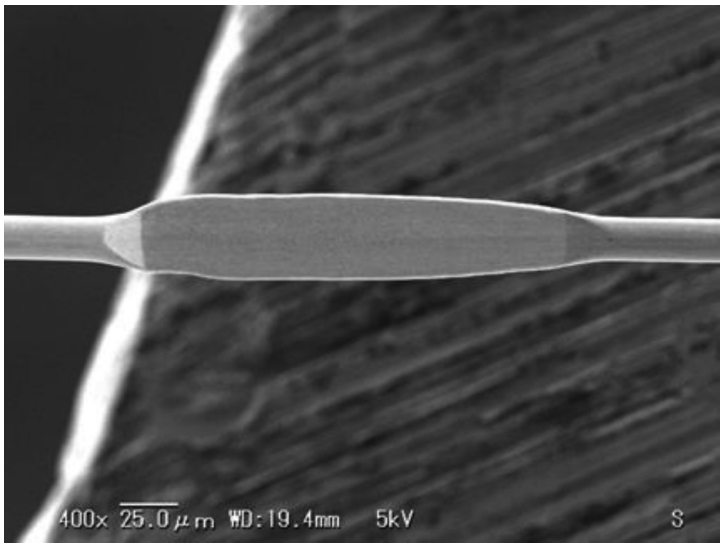
400x 25.0μm WD:19.4mm 5kV
S

FIG. 6

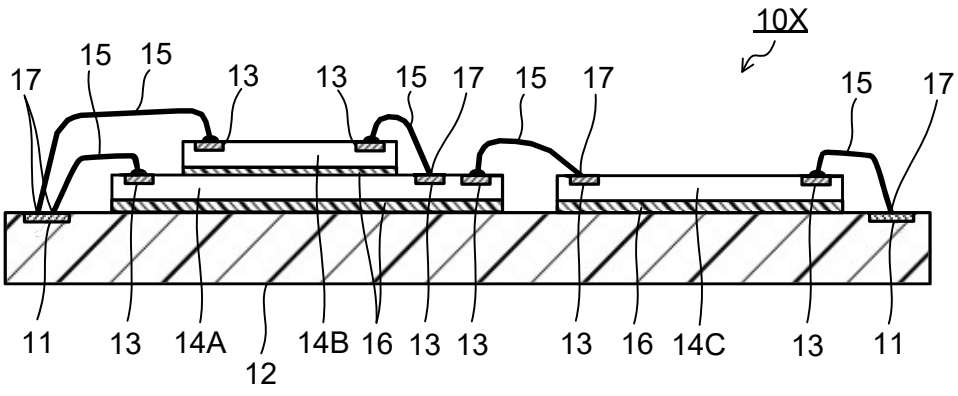
10X
17
15
15
13
13
15
17
15
17
15
17
11
13
14A
12
14B
16
13
13
13
16
14C
13
11

FIG. 7

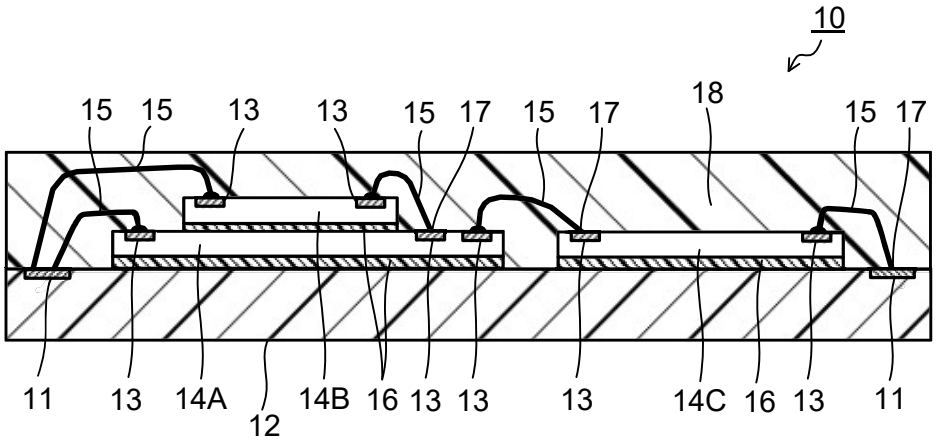
10
15
15
13
13
15
17
15
17
18
15
17
11
13
14A
12
14B
16
13
13
13
14C
16
13
11

FIG. 8

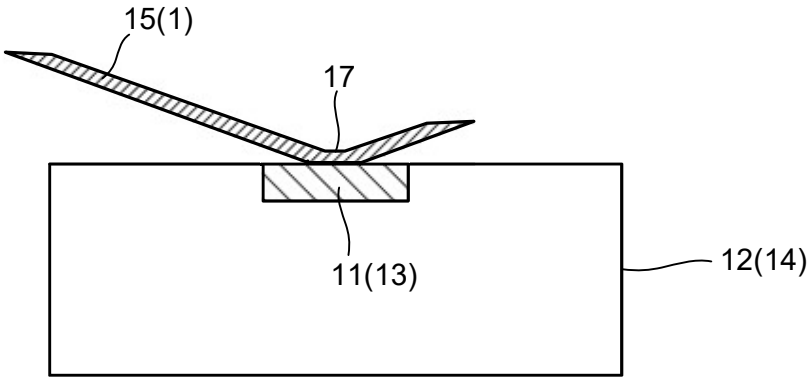
15(1)
17
11(13)
12(14)

FIG. 9

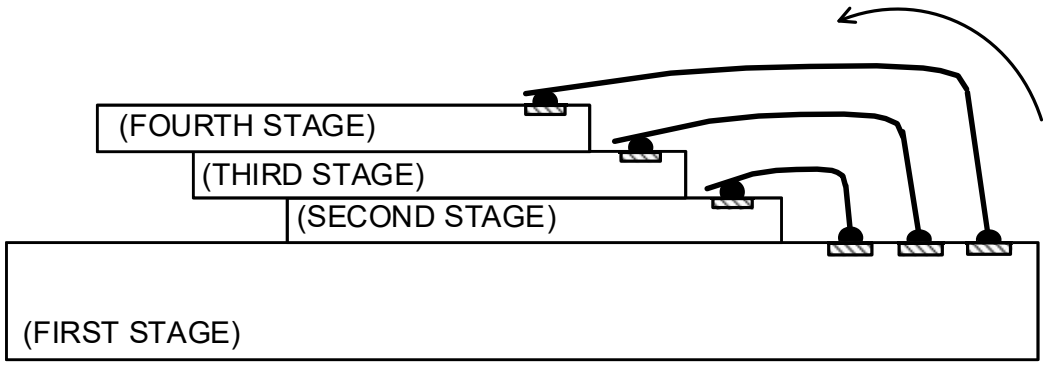
(FOURTH STAGE)
(THIRD STAGE)
(SECOND STAGE)
(FIRST STAGE)

FIG. 10

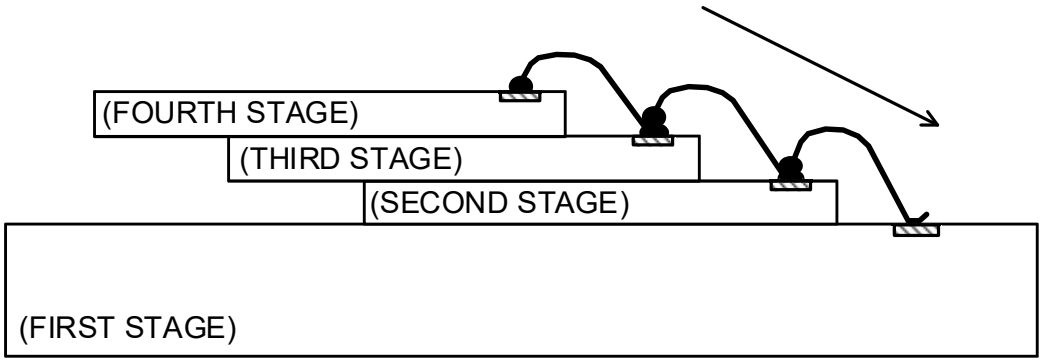
(FOURTH STAGE)
(THIRD STAGE)
(SECOND STAGE)
(FIRST STAGE)

FIG. 11

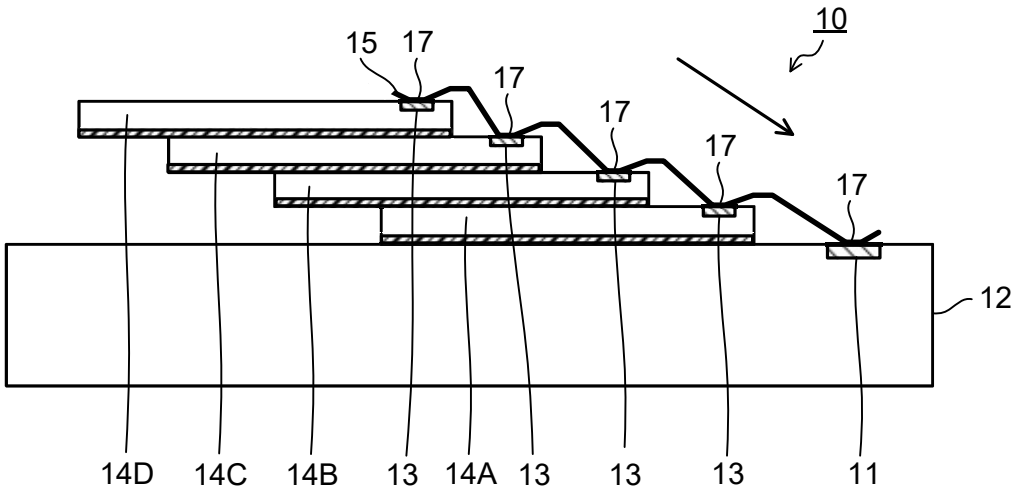
10
15
17
17
17
17
17
12
14D
14C
14B
13
14A
13
13
13
11

FIG. 12

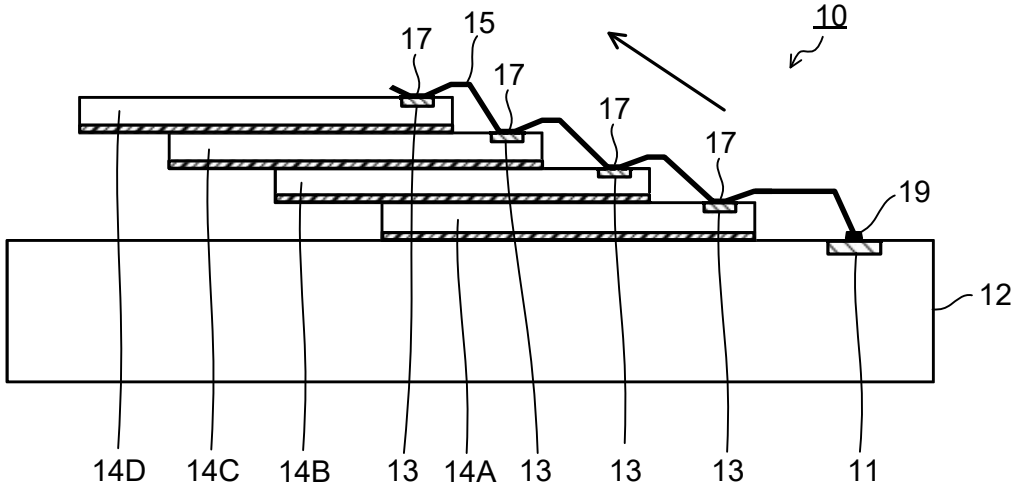
10
17
15
17
17
17
19
12
14D
14C
14B
13
14A
13
13
13
11

FIG. 13

