SG 9700589-6

RTMP copy

PCT WORLD INTELLECTUAL PROPERTY ORGANIZATION
International Bureau

INTERNATIONAL APPLICATION PUBLISHED UNDER THE PATENT COOPERATION TREATY (PCT)

(51) International Patent Classification 6 : B42C 3/00, 9/00 — A1

(11) International Publication Number: WO 96/05066

(43) International Publication Date: 22 February 1996 (22.02.96)

(21) International Application Number: PCT/US95/08772

(22) International Filing Date: 13 July 1995 (13.07.95)

(30) Priority Data:
08/291,628 17 August 1994 (17.08.94) US

(71) Applicant: MINNESOTA MINING AND MANUFACTURING COMPANY [US/US]; 3M Center, P.O. Box 33427, Saint Paul, MN 55133-3427 (US).

(72) Inventors: VOGEL, Mark, S.; P.O. Box 33427, Saint Paul, MN 55133-3427 (US). STIFTER, Gregory, F.; P.O. Box 33427, Saint Paul, MN 55133-3427 (US). PIERRE, Bernard, R.; P.O. Box 33427, Saint Paul, MN 55133-3427 (US). LE RICHE, Frederic, P., A.; P.O. Box 33427, Saint Paul, MN 55133-3427 (US).

(74) Agents: PETERS, Carolyn, V. et al.; Minnesota Mining and Manufacturing Company, Office of Intellectual Property Counsel, P.O. Box 33427, Saint Paul, MN 55133-3427 (US).

(81) Designated States: AU, JP, KR, SG, European patent (AT, BE, CH, DE, DK, ES, FR, GB, GR, IE, IT, LU, MC, NL, PT, SE).

Published
With international search report.

(54) Title: METHOD AND APPARATUS FOR APPLYING A COATING MATERIAL TO SHEETS

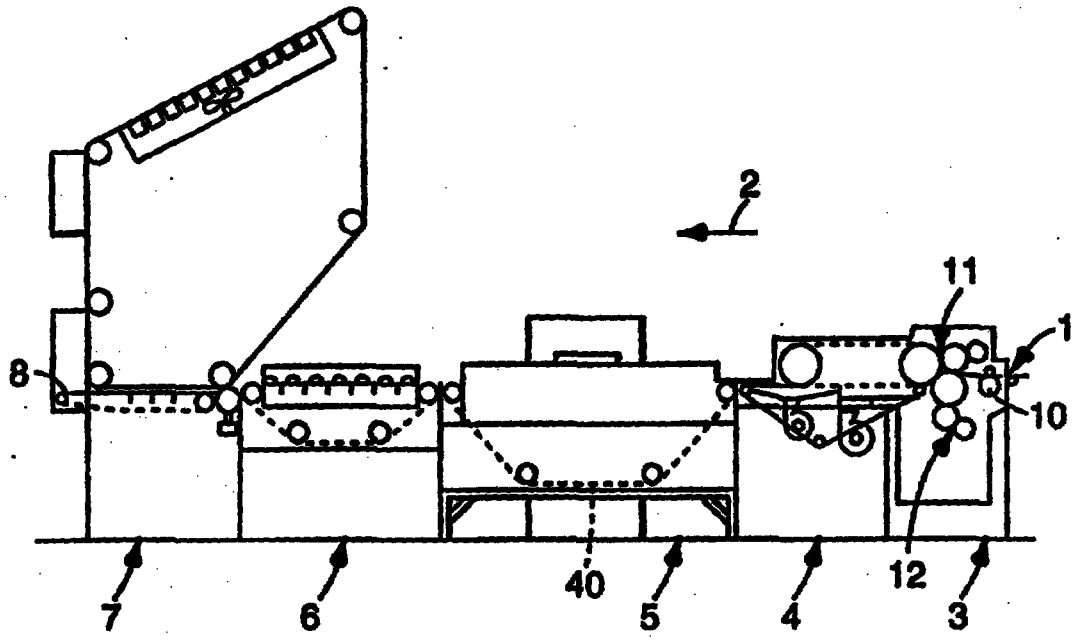

(57) Abstract

Individual sheets of, for example, paper are coated by feeding the sheets in succession through a coating station (11) in which a [illegible] material and a low adhesion backsize material are applied to opposite sides of the sheets. The sheets are then deposited on a conveyor [illegible] that they are overlapped to form a pseudo-web of sheets.