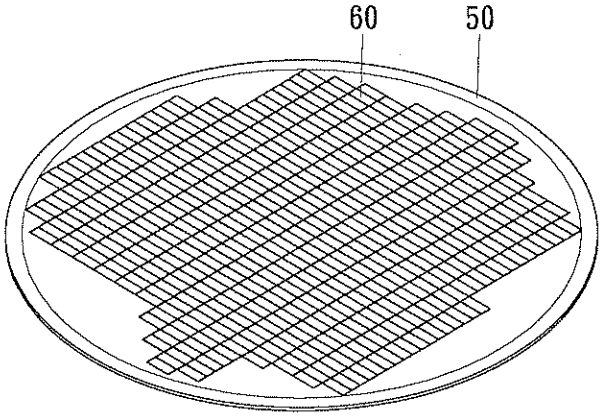

FIG. 1
(prior art)

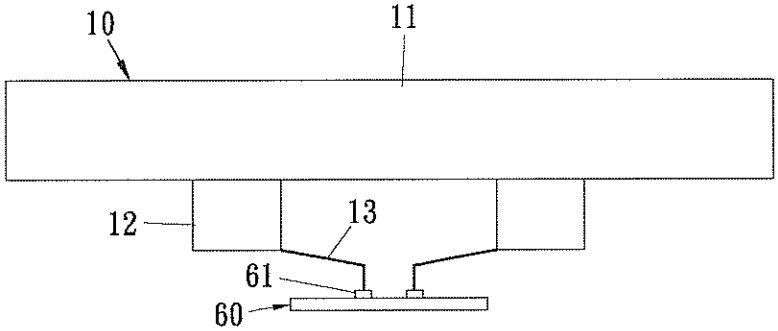

FIG. 2
(prior art)

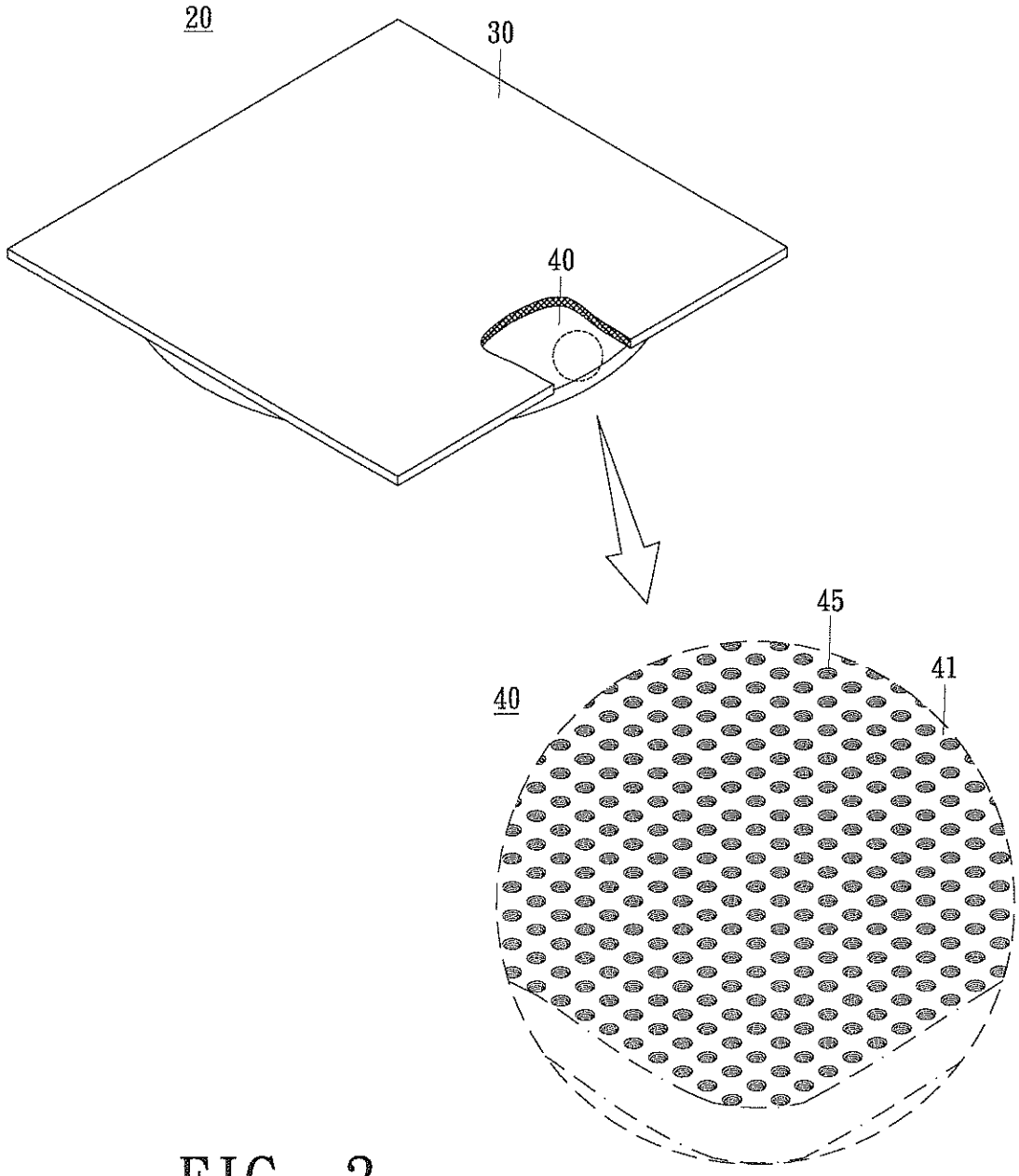

FIG. 3

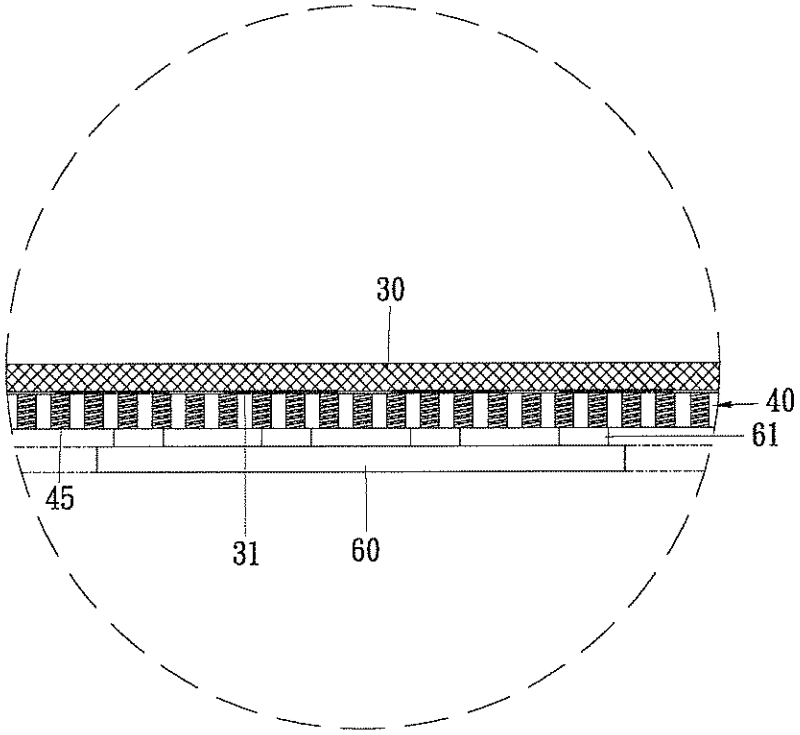

FIG. 4