(12) INTERNATIONAL APPLICATION PUBLISHED UNDER THE PATENT COOPERATION TREATY (PCT)

(19) World Intellectual Property Organization
International Bureau

(43) International Publication Date
29 June 2023 (29.06.2023)

WIPO | PCT

(10) International Publication Number
WO 2023/121972 A1

(51) International Patent Classification:
*B01D 53/62* (2006.01) *B01D 53/14* (2006.01)

(21) International Application Number:
PCT/US2022/053201

(22) International Filing Date:
16 December 2022 (16.12.2022)

(25) Filing Language: English

(26) Publication Language: English

(30) Priority Data:
17/556,332 20 December 2021 (20.12.2021) US

(71) Applicant: **NEXT CARBON SOLUTIONS, LLC** [US/US]; 1000 Louisiana, Suite 3900, Houston, Texas 77002 (US).

(72) Inventors: **HEICHELBECH, Ben**; c/o NEXT CARBON SOLUTIONS, LLC, 1000 Louisiana, Suite 3900, Houston, Texas 77002 (US). **VAN DER WALT, Ivan**; c/o NEXT CARBON SOLUTIONS, LLC, 1000 Louisiana, Suite 3900, Houston, Texas 77002 (US). **RIVARD, Connor**; c/o NEXT CARBON SOLUTIONS, LLC, 1000 Louisiana, Suite 3900, Houston, Texas 77002 (US). **THOMPSON, Alex**; c/o NEXT CARBON SOLUTIONS, LLC, 1000 Louisiana, Suite 3900, Houston, Texas 77002 (US).

(74) Agent: **JIANG, Jian**; K&L Gates LLP, c/o Foreign Patents, P.O. Box 1135, Chicago, Illinois 60690-1135 (US).

(81) Designated States *(unless otherwise indicated, for every kind of national protection available)*: AE, AG, AL, AM, AO, AT, AU, AZ, BA, BB, BG, BH, BN, BR, BW, BY, BZ, CA, CH, CL, CN, CO, CR, CU, CV, CZ, DE, DJ, DK, DM, DO, DZ, EC, EE, EG, ES, FI, GB, GD, GE, GH, GM, GT, HN, HR, HU, ID, IL, IN, IQ, IR, IS, IT, JM, JO, JP, KE, KG, KH, KN, KP, KR, KW, KZ, LA, LC, LK, LR, LS, LU, LY, MA, MD, MG, MK, MN, MW, MX, MY, MZ, NA, NG, NI, NO, NZ, OM, PA, PE, PG, PH, PL, PT, QA, RO, RS, RU, RW, SA, SC, SD, SE, SG, SK, SL, ST, SV, SY, TH, TJ, TM, TN, TR, TT, TZ, UA, UG, US, UZ, VC, VN, WS, ZA, ZM, ZW.

(84) Designated States *(unless otherwise indicated, for every kind of regional protection available)*: ARIPO (BW, CV,

(54) Title: DEVICES, SYSTEMS, FACILITIES AND PROCESSES FOR CARBON CAPTURE OPTIMIZATION IN INDUSTRIAL FACILITIES

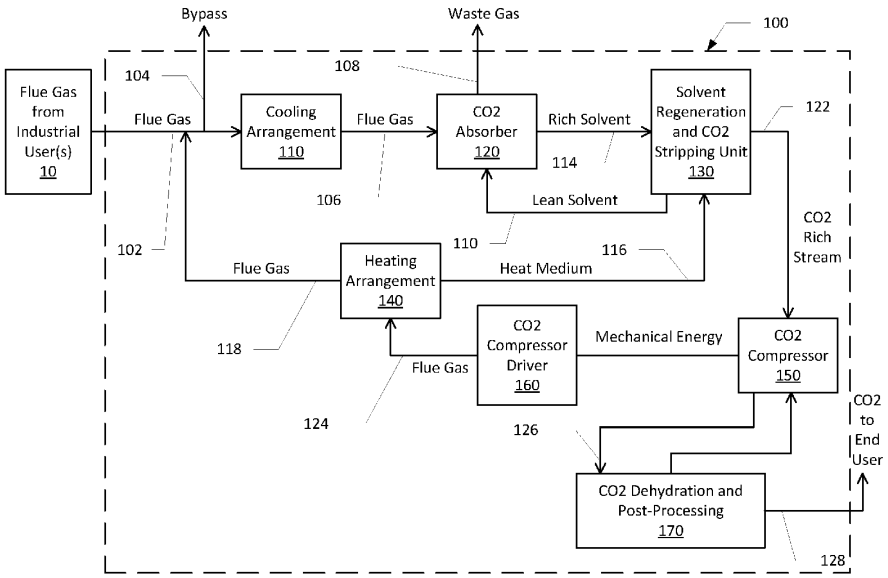


FIG. 1

(57) Abstract: Devices, systems, and methods for carbon capture optimization in industrial facilities are disclosed herein. An example carbon capture process involves cooling a flue gas stream using at least one gas-to-air heat exchanger disposed upstream of a carbon dioxide (CO2) absorber. Another example carbon capture process involves heating a heat medium for solvent regeneration and CO2 stripping using a fired heater and/or using at least one waste heat recovery unit.

[Continued on next page]

WO 2023/121972 A1

GH, GM, KE, LR, LS, MW, MZ, NA, RW, SD, SL, ST, SZ, TZ, UG, ZM, ZW), Eurasian (AM, AZ, BY, KG, KZ, RU, TJ, TM), European (AL, AT, BE, BG, CH, CY, CZ, DE, DK, EE, ES, FI, FR, GB, GR, HR, HU, IE, IS, IT, LT, LU, LV, MC, ME, MK, MT, NL, NO, PL, PT, RO, RS, SE, SI, SK, SM, TR), OAPI (BF, BJ, CF, CG, CI, CM, GA, GN, GQ, GW, KM, ML, MR, NE, SN, TD, TG).

**Declarations under Rule 4.17:**

— *as to applicant's entitlement to apply for and be granted a patent (Rule 4.17(ii))*

— *as to the applicant's entitlement to claim the priority of the earlier application (Rule 4.17(iii))*

**Published:**

— *with international search report (Art. 21(3))*