PCT WORLD INTELLECTUAL PROPERTY ORGANIZATION
International Bureau

INTERNATIONAL APPLICATION PUBLISHED UNDER THE PATENT COOPERATION TREATY (PCT)

(51) International Patent Classification 7 :		(11) International Publication Number:	WO 00/38972
B63B 13/00	A1	(43) International Publication Date:	6 July 2000 (06.07.00)

(21) International Application Number: PCT/CA98/01167

(22) International Filing Date: 28 December 1998 (28.12.98)

(71) Applicant: TEEKAY SHIPPING (CANADA) LTD. [CA/CA]; Suite 1400, One Bentall Centre, 505 Burrard Street, Vancouver, British Columbia V7X 1M5 (CA).

(72) Inventors: TAMASHIMA, Masahiro; 339–30 Kojima, Kuroishimen, Kozasa–cho, Kitamatsuura–gun, Nagasaki Pref. 857–0401 (JP). NUMATA, Hisashi; 3995–13 Mukaihigashi–cho, Onomichi, Hiroshima–Pref. 772–0062 (JP).

(74) Agent: DE KOCK, Elbie, R.; Russell Reyneke, Suite 700, Two Bentall Centre, 555 Burrard Street, Vancouver, British Columbia V7X 1M8 (CA).

(81) Designated States: AL, AM, AT, AU, AZ, BA, BB, BG, BR, BY, CA, CH, CN, CU, CZ, DE, DK, EE, ES, FI, GB, GD, GE, GH, GM, HR, HU, ID, IL, IN, IS, JP, KE, KG, KP, KR, KZ, LC, LK, LR, LS, LT, LU, LV, MD, MG, MK, MN, MW, MX, NO, NZ, PL, PT, RO, RU, SD, SE, SG, SI, SK, SL, TJ, TM, TR, TT, UA, UG, UZ, VN, YU, ZW, ARIPO patent (GH, GM, KE, LS, MW, SD, SZ, UG, ZW), Eurasian patent (AM, AZ, BY, KG, KZ, MD, RU, TJ, TM), European patent (AT, BE, CH, CY, DE, DK, ES, FI, FR, GB, GR, IE, IT, LU, MC, NL, PT, SE), OAPI patent (BF, BJ, CF, CG, CI, CM, GA, GN, GW, ML, MR, NE, SN, TD, TG).

Published
With international search report.

(54) Title: METHOD AND APPARATUS FOR EXCHANGING BALLAST WATER IN A SHIP

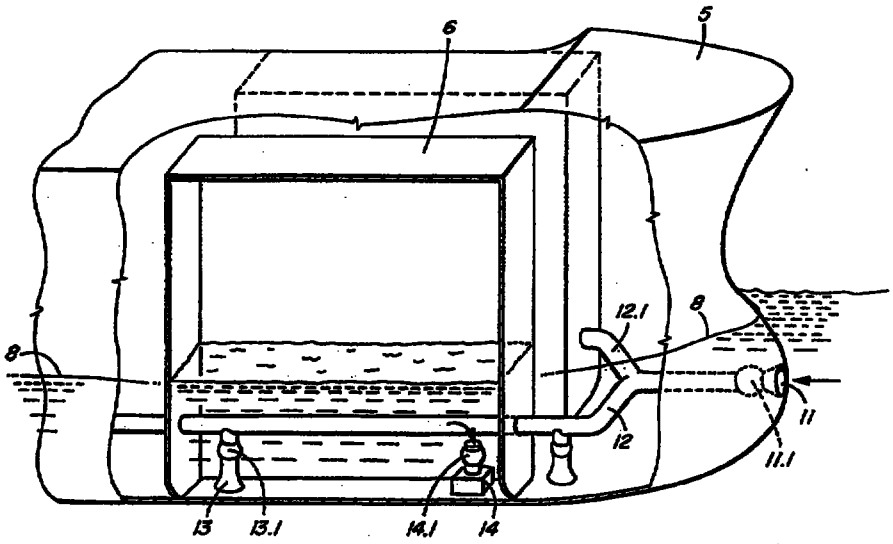

(57) Abstract

A system for automatically replacing ballast water in a ballast tank (6) of a ship (5) comprises a water inlet port (11) on a part of the ship where the water pressure acting on the ship when in forward motion in the water is higher than the pressure of the ballast water being replaced, a water discharge outlet (14) in the ballast tank and a water inlet passage (12) extending between the water inlet port (11) and the ballast tank (6) for introducing water into the ballast tank at a higher pressure than the ballast water in the tank. In this way the ballast water is forced from the ballast tank through the discharge outlet (14) to be replaced by water introduced through the inlet port (11). A method for replacing ballast water in the ballast tank of a ship is also provided.