【FIG. 1】

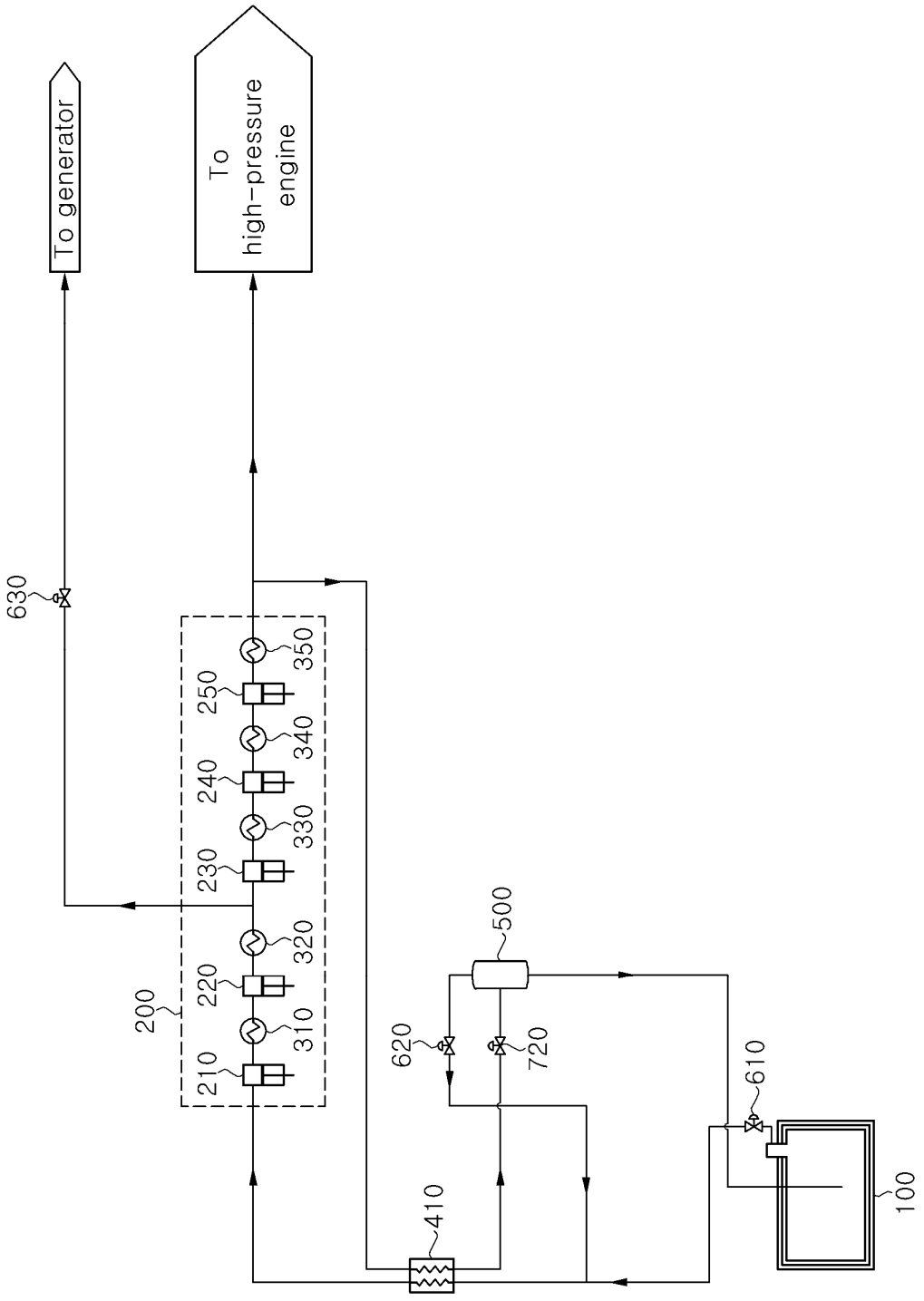
To generator
To high-pressure engine
630
200
210
220
230
240
250
310
320
330
340
350
410
500
620
720
610
100

【FIG. 2】

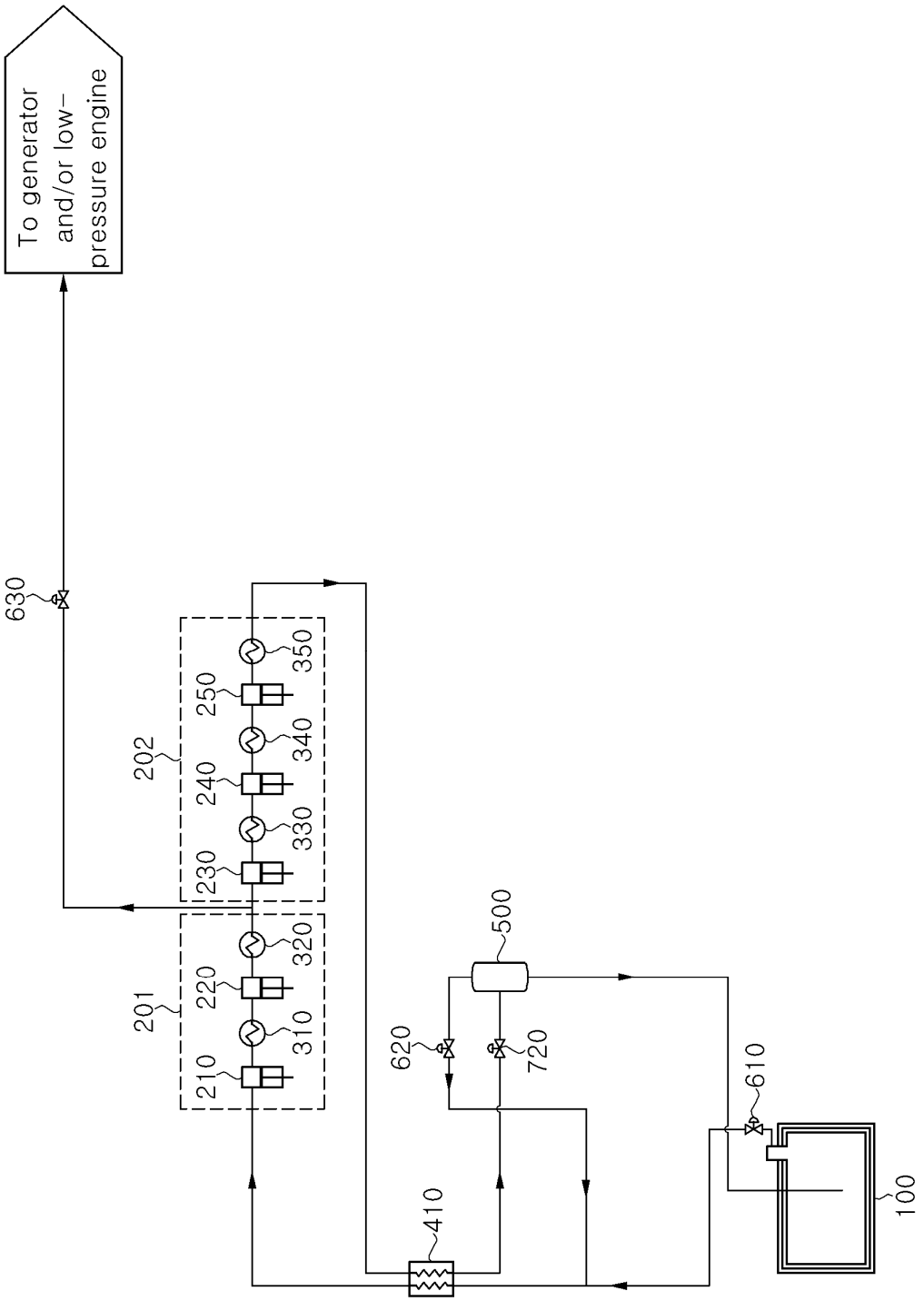
To generator and/or low-pressure engine
630
202
250
240
230
350
340
330
201
220
210
320
310
500
620
720
610
410
100

【FIG. 3】

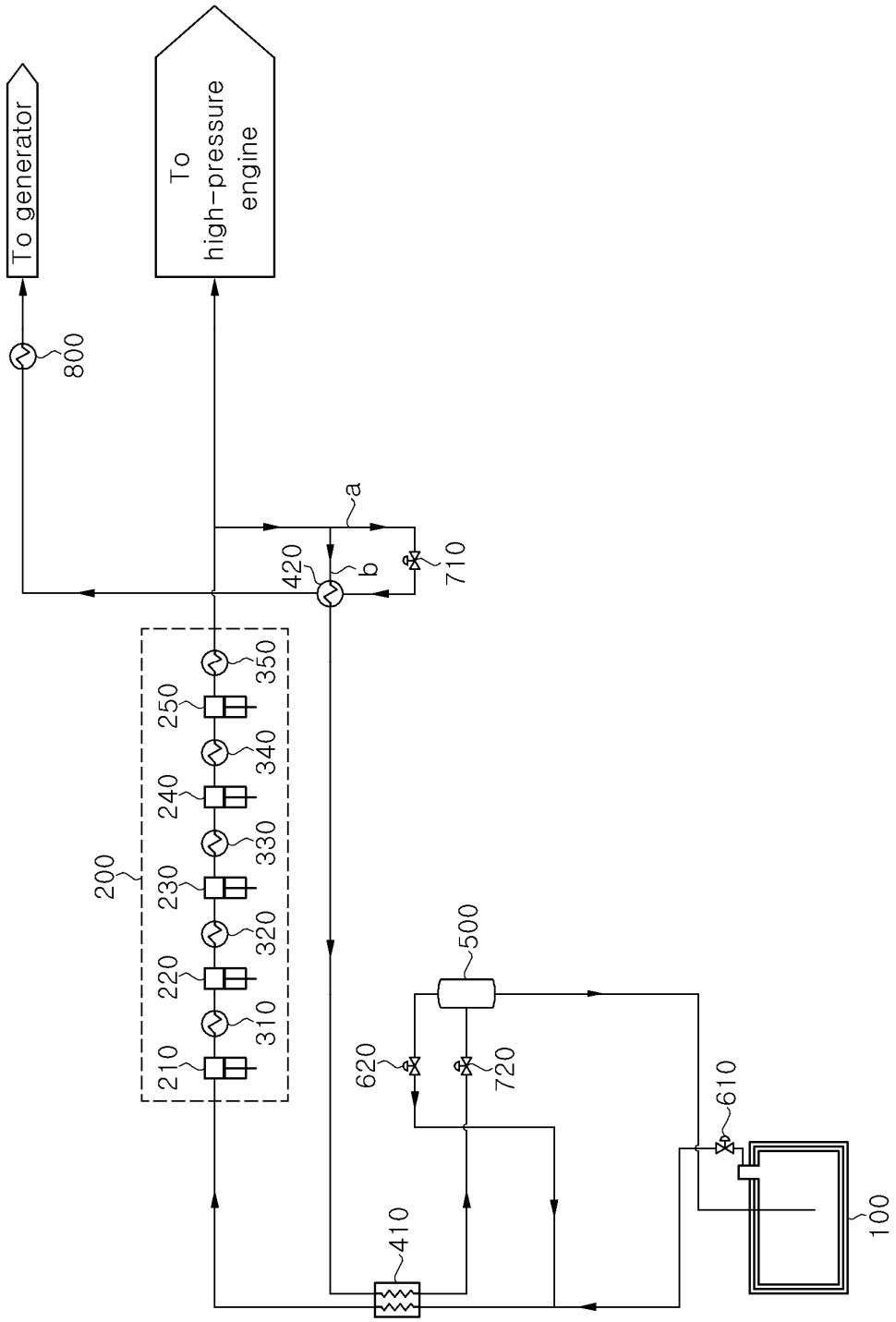
To generator
To high-pressure engine
800
a
b
420
710
200
210
220
230
240
250
310
320
330
340
350
500
620
720
610
410
100

【FIG. 4】

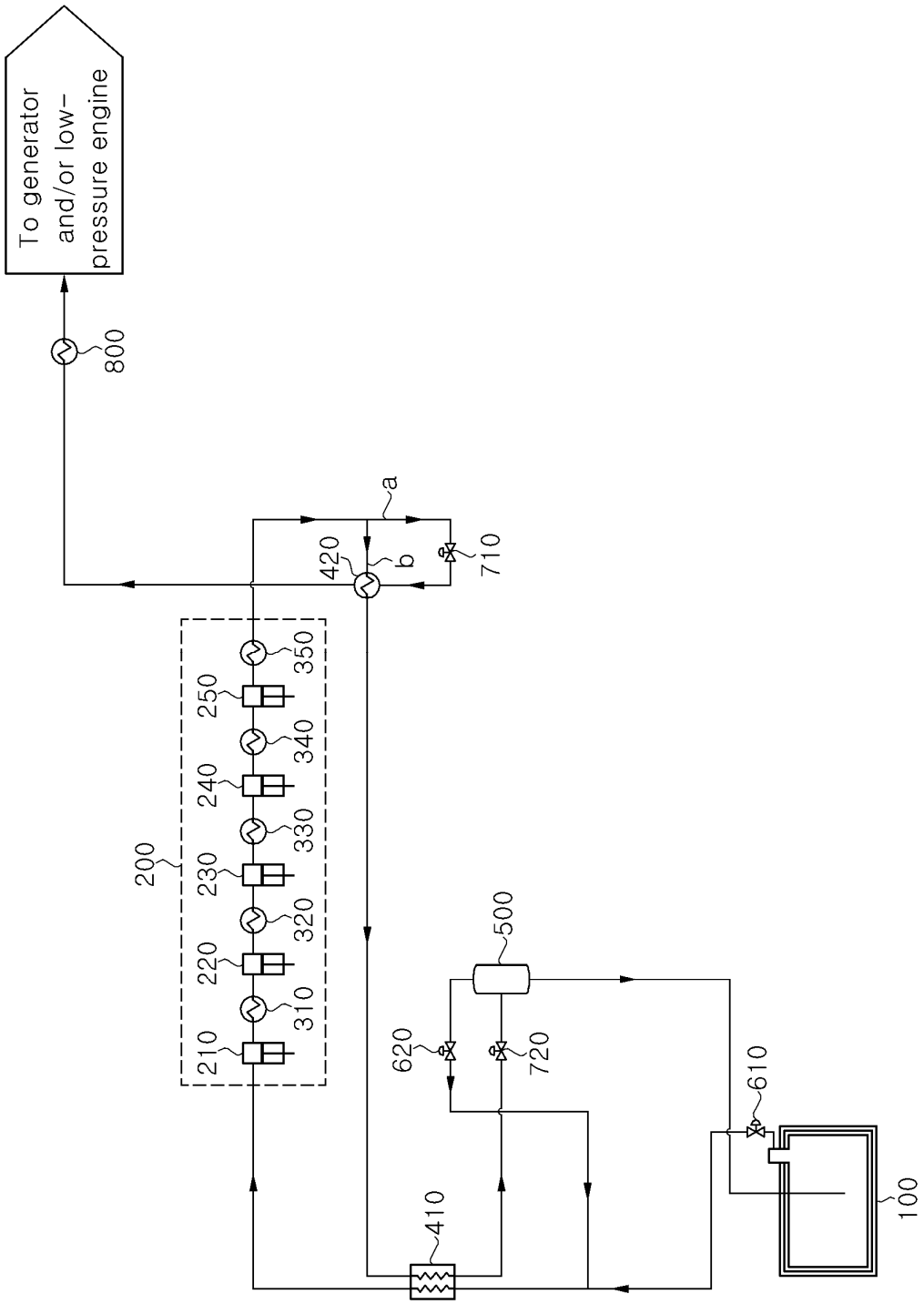
To generator and/or low-pressure engine
800
a
b
420
710
200
210
220
230
240
250
310
320
330
340
350
500
620
720
610
410
100

【FIG. 5】

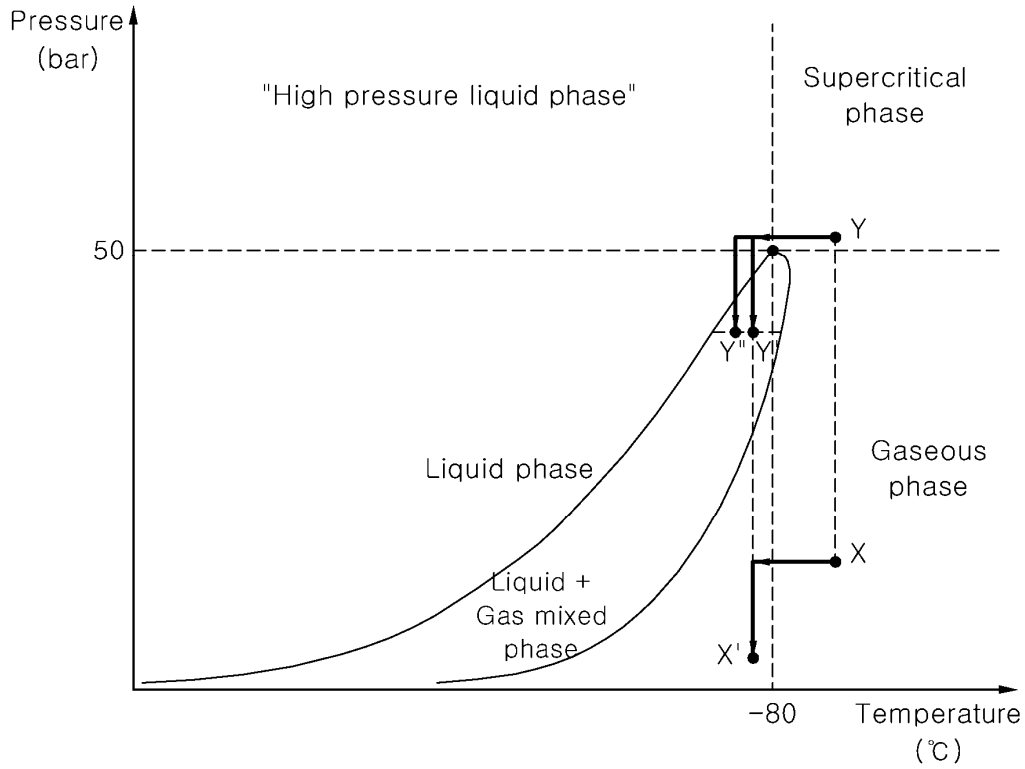
Pressure
(bar)
"High pressure liquid phase"
Supercritical
phase
50
Y
Y"
Y'
Liquid phase
Gaseous
phase
X
Liquid +
Gas mixed
phase
X'
-80
Temperature
(℃)