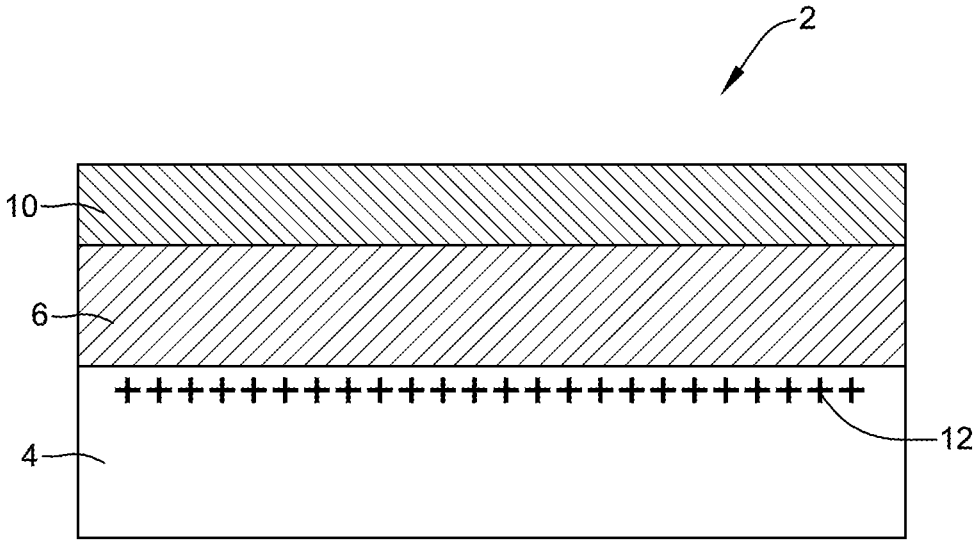

FIG. 1

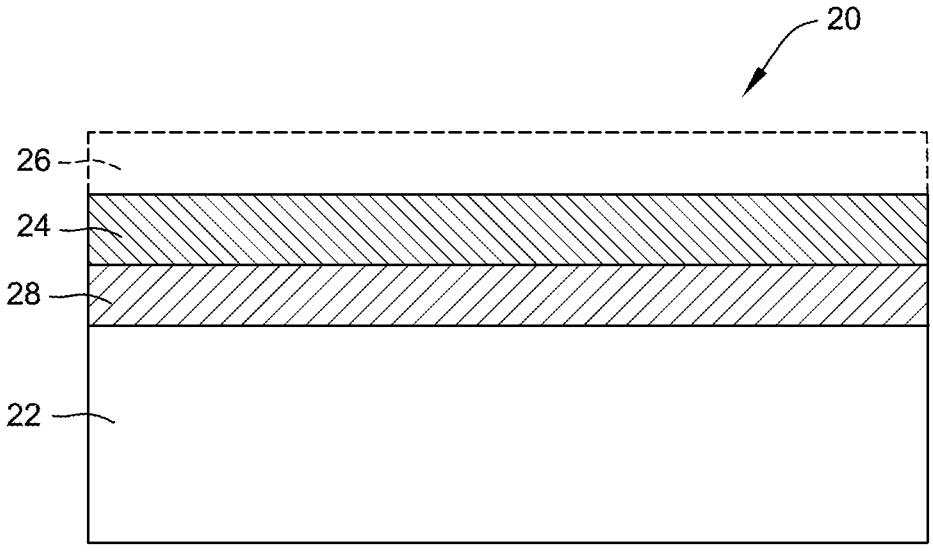

FIG. 2

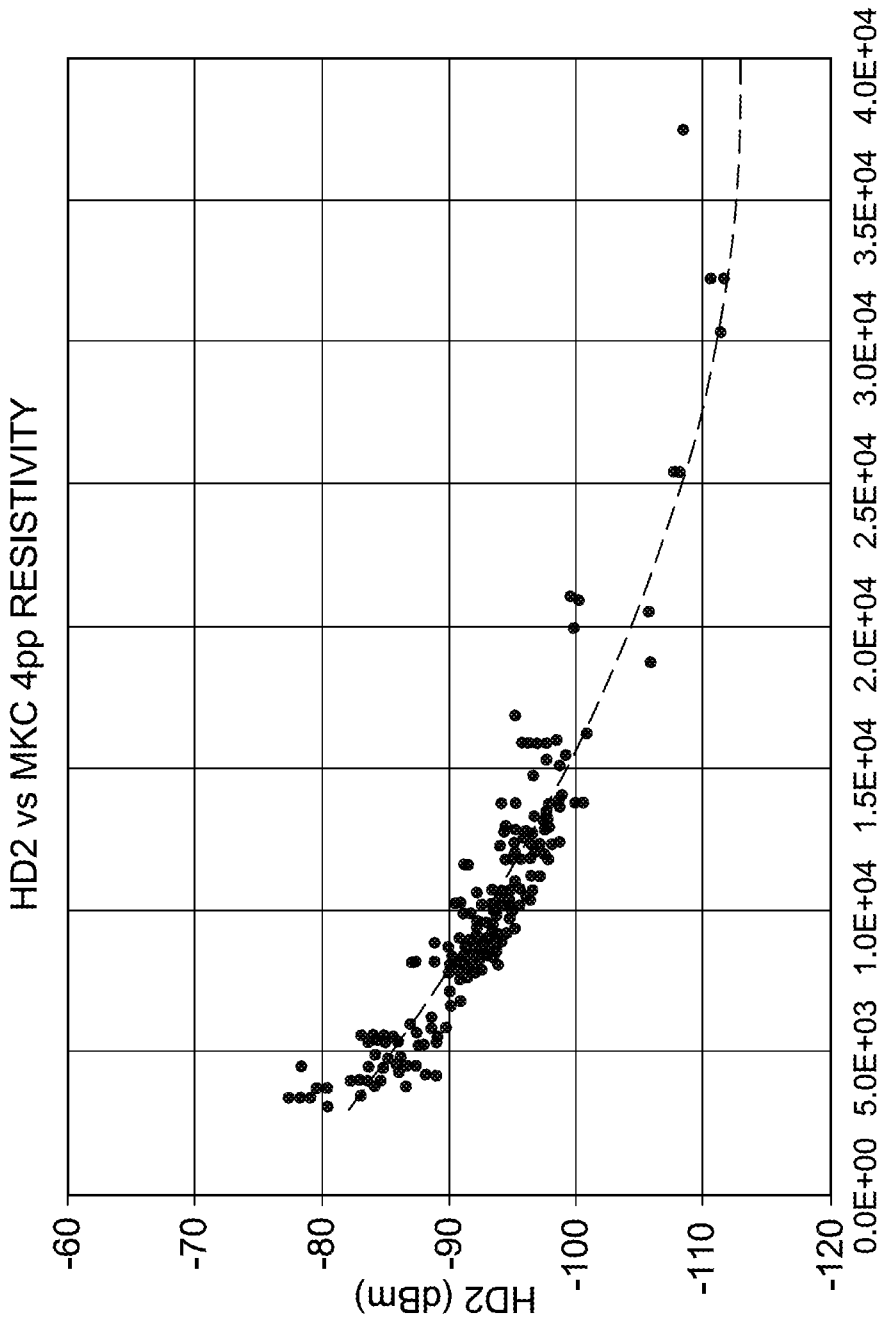
HD2 vs MKC 4pp RESISTIVITY
HD2 (dBm)
-60
-70
-80
-90
-100
-110
-120
0.0E+00
5.0E+03
1.0E+04
1.5E+04
2.0E+04
2.5E+04
3.0E+04
3.5E+04
4.0E+04
SUBSTRATE RESISTIVITY (ohm-cm)

FIG. 3

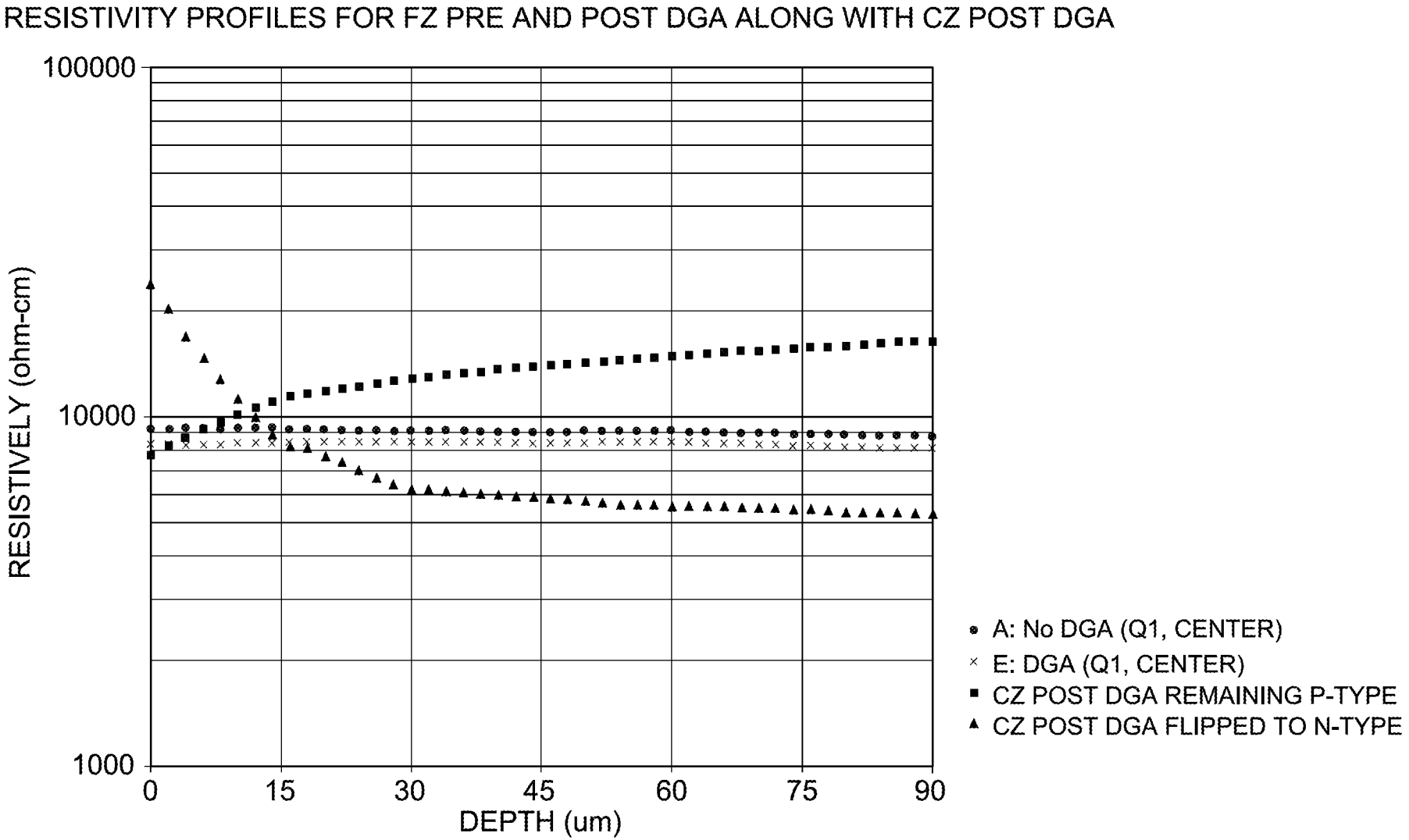
RESISTIVITY PROFILES FOR FZ PRE AND POST DGA ALONG WITH CZ POST DGA
100000
10000
1000
RESISTIVELY (ohm-cm)
0
15
30
45
60
75
90
DEPTH (um)
A: No DGA (Q1, CENTER)
E: DGA (Q1, CENTER)
CZ POST DGA REMAINING P-TYPE
CZ POST DGA FLIPPED TO N-TYPE

FIG. 4

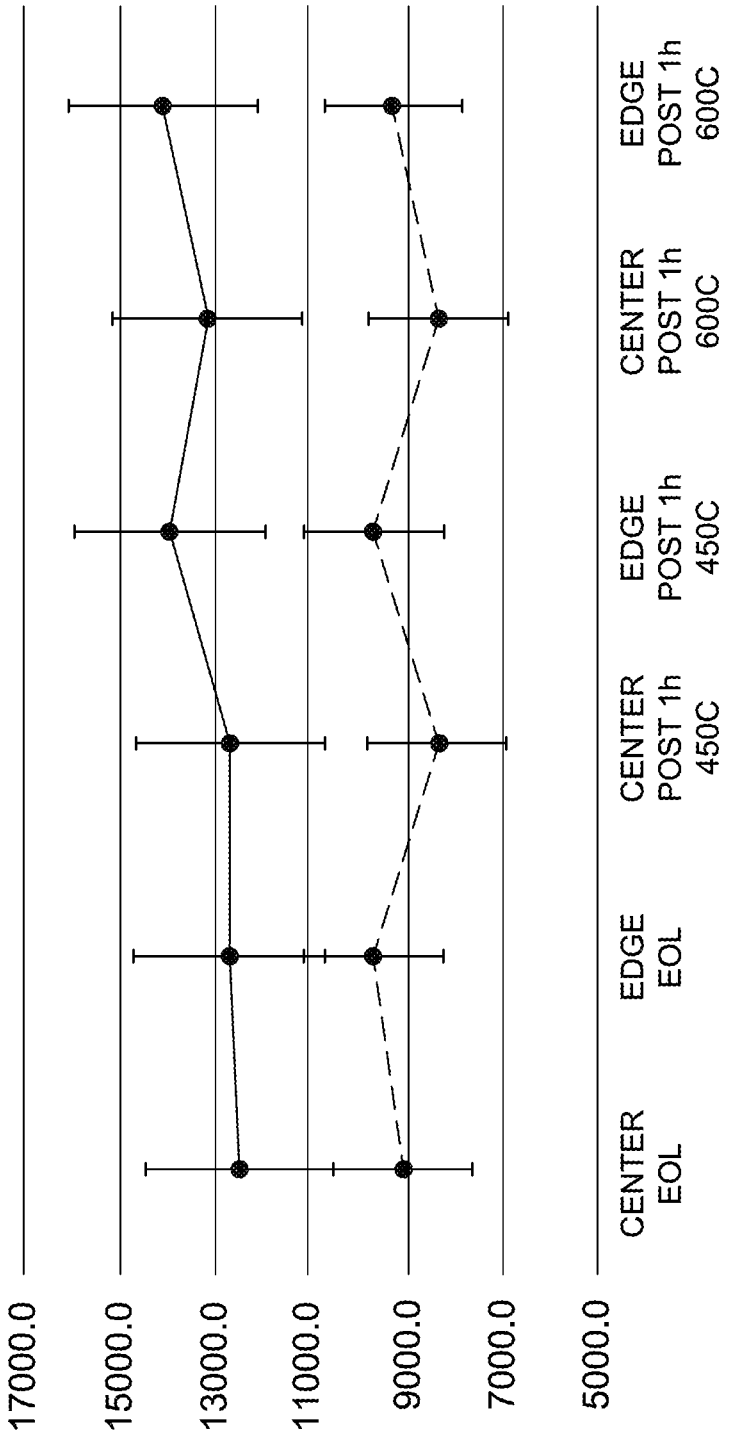
AVERAGE RESISTIVITY (SRP to 90um DEPTH)
17000.0
15000.0
13000.0
11000.0
9000.0
7000.0
5000.0
CENTER EOL
EDGE EOL
CENTER POST 1h 450C
EDGE POST 1h 450C
CENTER POST 1h 600C
EDGE POST 1h 600C
> 5K
> 10K

FIG. 5