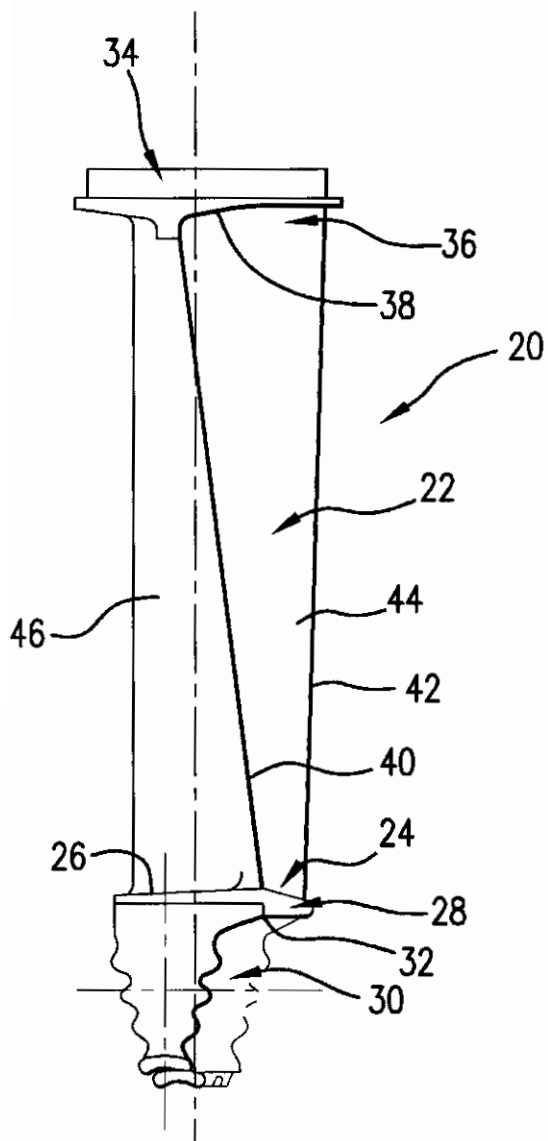

FIG.1
(PRIOR ART)

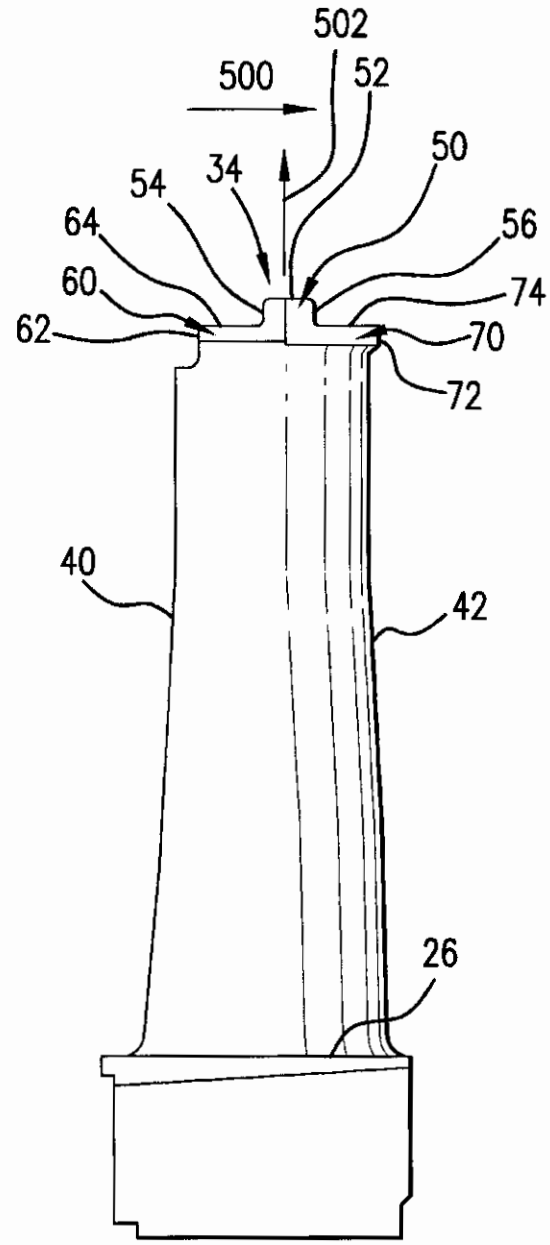

FIG.2
(PRIOR ART)

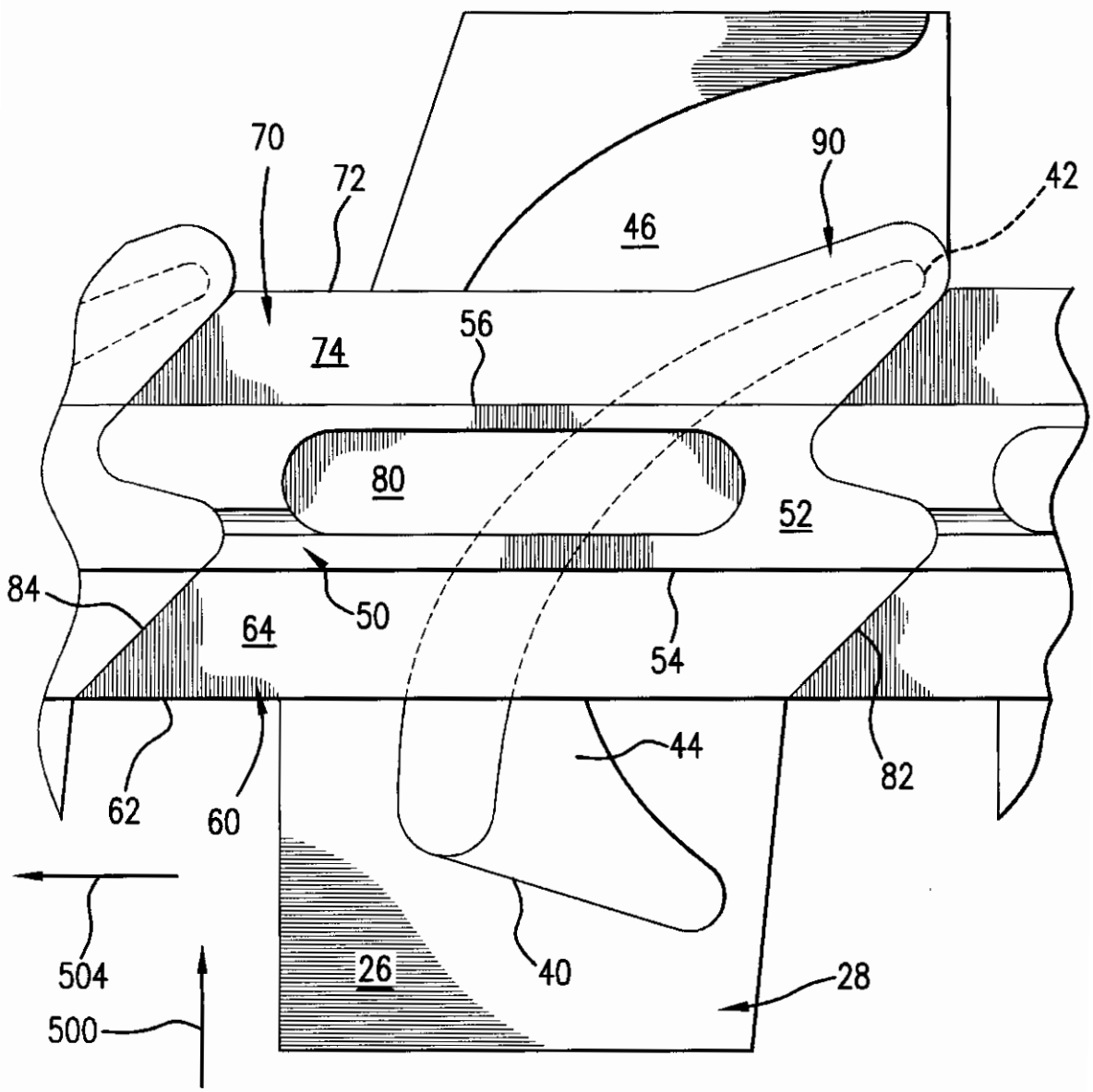

FIG.3
(PRIOR ART)

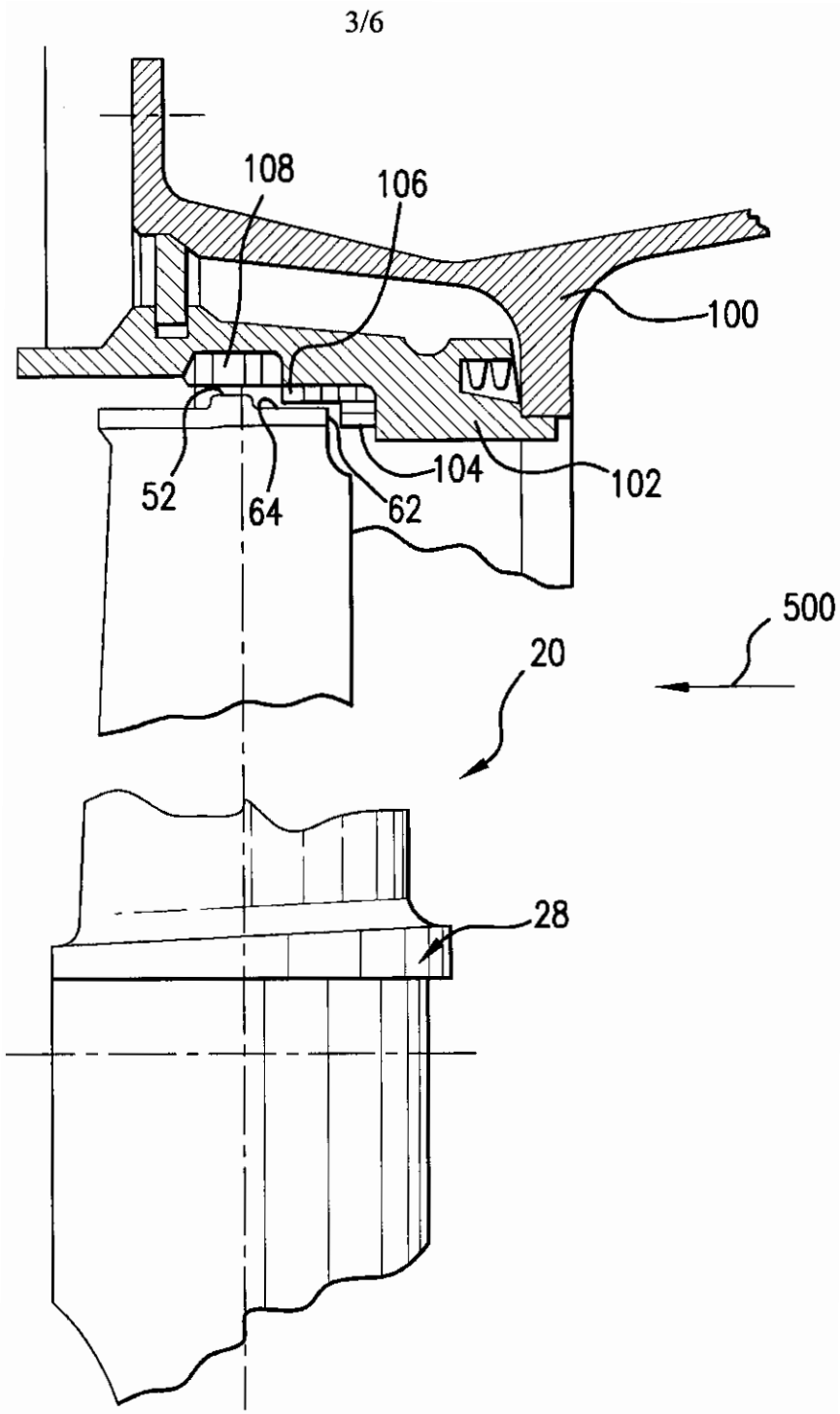

FIG.4
(PRIOR ART)

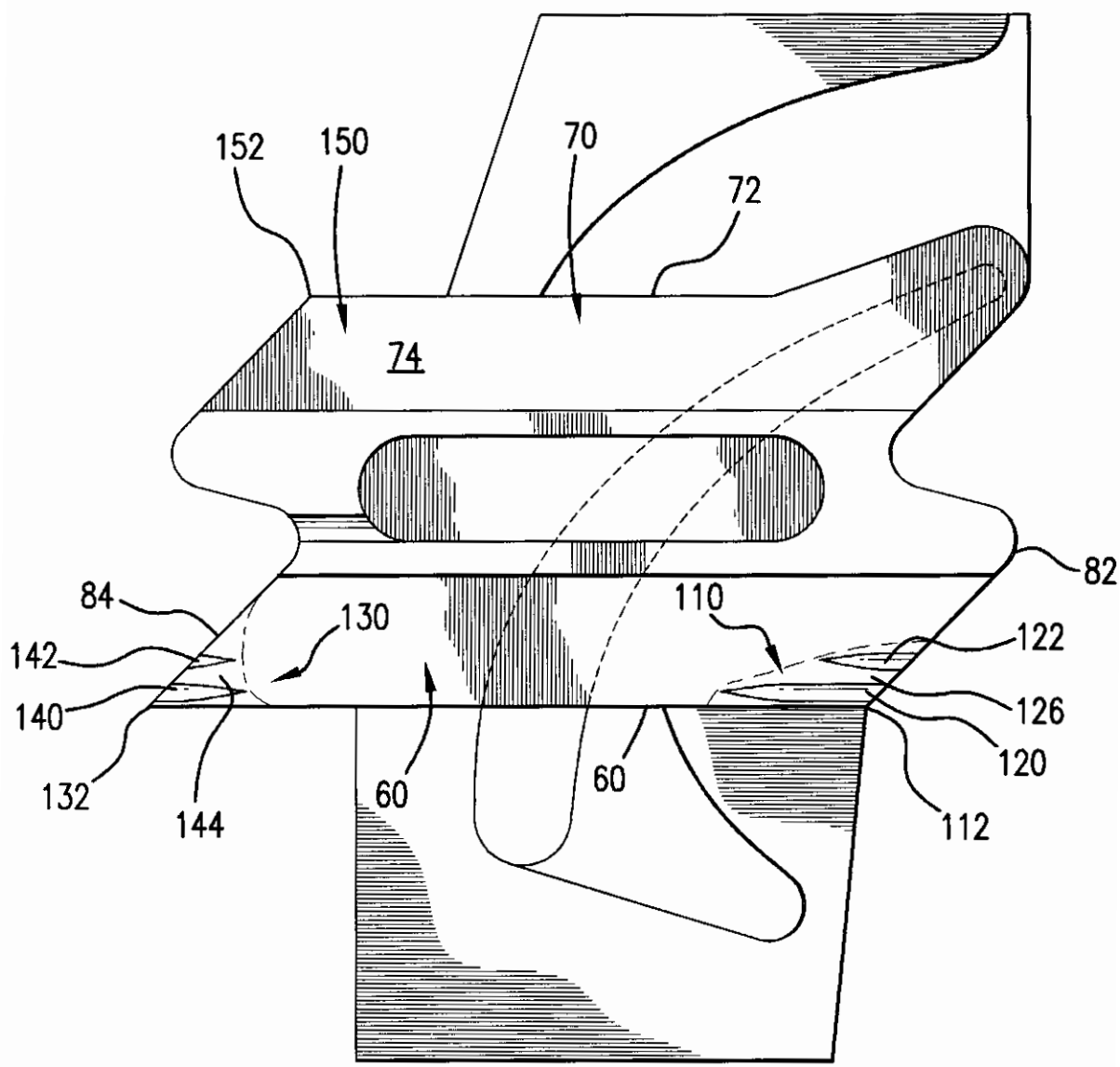

FIG.5
(PRIOR ART)

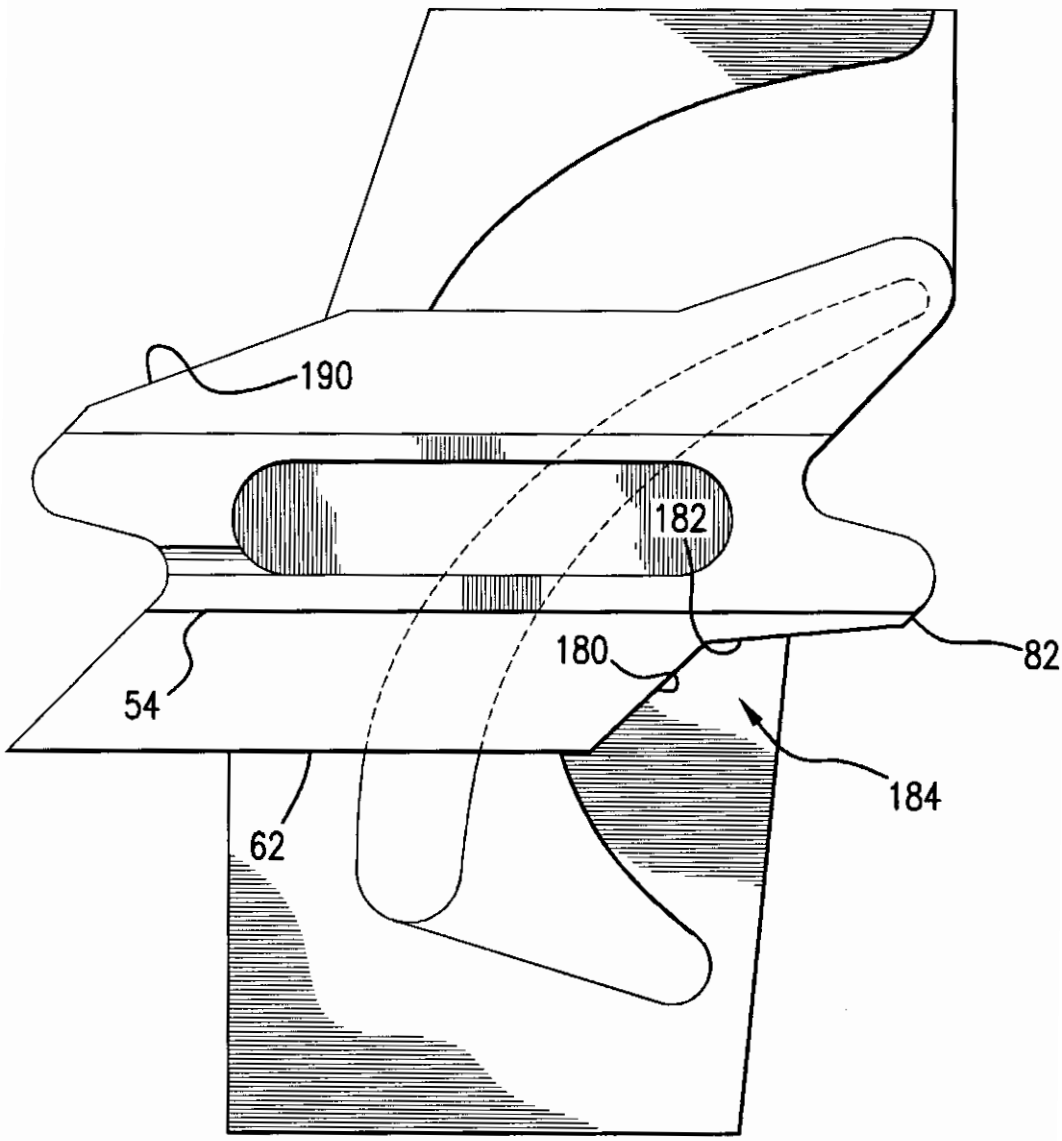

FIG.6

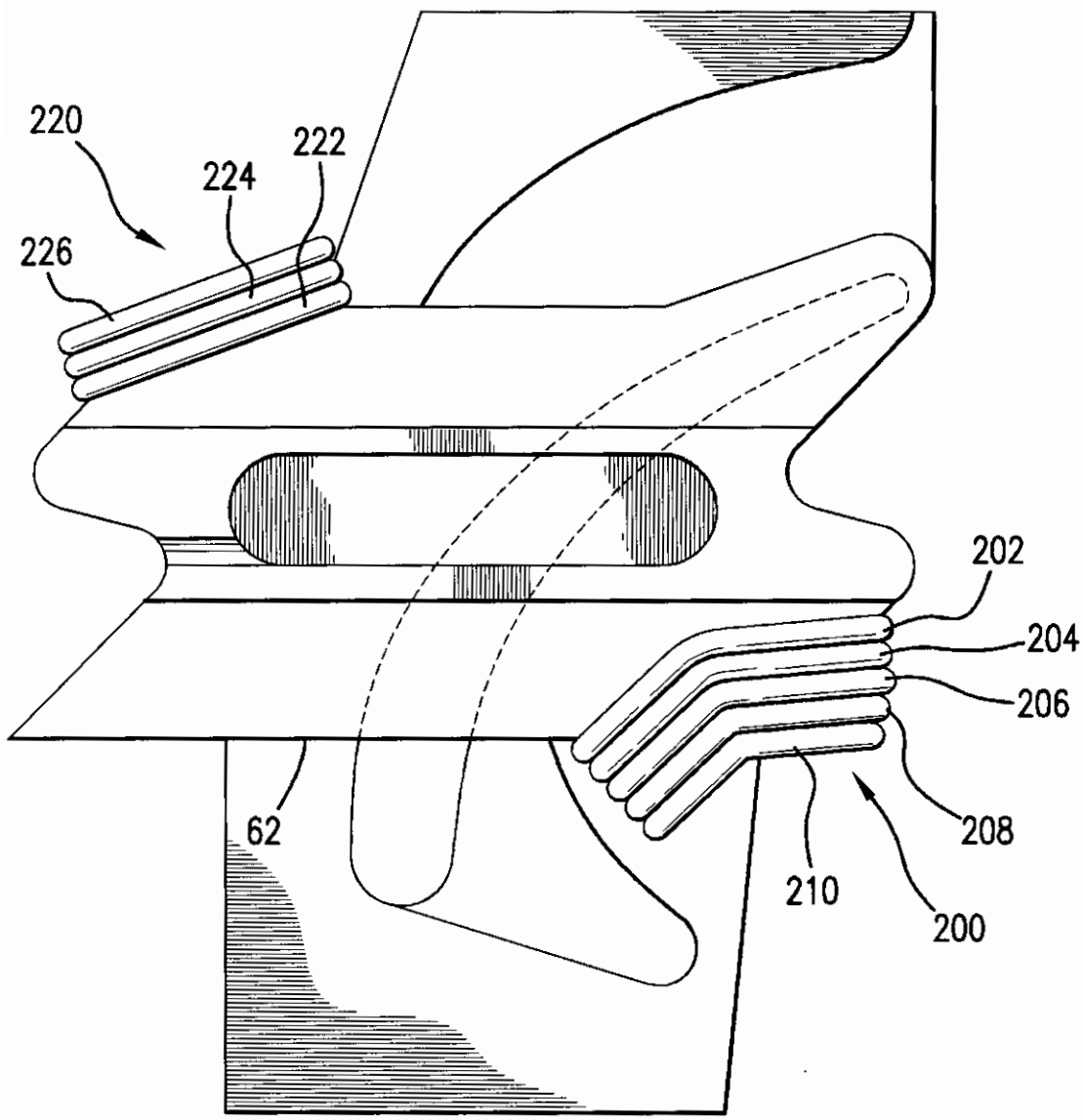

FIG.7