(12) INTERNATIONAL APPLICATION PUBLISHED UNDER THE PATENT COOPERATION TREATY (PCT)

(19) World Intellectual Property Organization
International Bureau

(43) International Publication Date
2 December 2004 (02.12.2004)

PCT

(10) International Publication Number
WO 2004/103830 A2

(51) International Patent Classification[7]: B65D

(21) International Application Number:
PCT/US2004/015545

(22) International Filing Date: 18 May 2004 (18.05.2004)

(25) Filing Language: English

(26) Publication Language: English

(30) Priority Data:
60/471,331 19 May 2003 (19.05.2003) US

(71) Applicant *(for all designated States except US)*: **AEPCO, INC.** [US/US]; 15800 Crabbs Branch Way, Suite 300, Rockville, MD 20855 (US).

(72) Inventors; and

(75) Inventors/Applicants *(for US only)*: **TREPPIG, William, M., Jr.** [US/US]; 911 Merringdale Boulevard, Mount Airy, MD 21770 (US). **CLARKE, Robert, A.** [US/US]; 17121 Whites Road, Poolesville, MD 20837 (US).

(74) Agent: **BUFORD, Kevin, A.**; Holland & Knight LLP, 1600 Tysons Boulevard, Suite 700, McLean, VA 22102-4867 (US).

(81) Designated States *(unless otherwise indicated, for every kind of national protection available)*: AE, AG, AL, AM, AT, AU, AZ, BA, BB, BG, BR, BW, BY, BZ, CA, CH, CN, CO, CR, CU, CZ, DE, DK, DM, DZ, EC, EE, EG, ES, FI, GB, GD, GE, GH, GM, HR, HU, ID, IL, IN, IS, JP, KE, KG, KP, KR, KZ, LC, LK, LR, LS, LT, LU, LV, MA, MD, MG, MK, MN, MW, MX, MZ, NA, NI, NO, NZ, OM, PG, PH, PL, PT, RO, RU, SC, SD, SE, SG, SK, SL, SY, TJ, TM, TN, TR, TT, TZ, UA, UG, US, UZ, VC, VN, YU, ZA, ZM, ZW.

(84) Designated States *(unless otherwise indicated, for every kind of regional protection available)*: ARIPO (BW, GH, GM, KE, LS, MW, MZ, NA, SD, SL, SZ, TZ, UG, ZM, ZW), Eurasian (AM, AZ, BY, KG, KZ, MD, RU, TJ, TM), European (AT, BE, BG, CH, CY, CZ, DE, DK, EE, ES, FI, FR, GB, GR, HU, IE, IT, LU, MC, NL, PL, PT, RO, SE, SI, SK, TR), OAPI (BF, BJ, CF, CG, CI, CM, GA, GN, GQ, GW, ML, MR, NE, SN, TD, TG).

Published:
— *without international search report and to be republished upon receipt of that report*

[Continued on next page]

(54) Title: AUTONOMOUS SWIMMING CARGO CONTAINERS

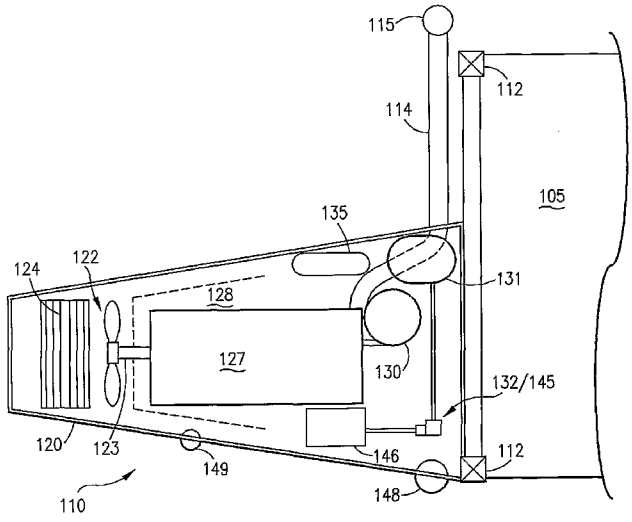

(57) Abstract: The present invention provides an apparatus, method and system for delivery of commercial cargo containers shore side without container terminals. The present invention utilizes containers made autonomous by coupling a container 105 with a detachable propulsion system 120, having a motor 127 and navigation and steering controls 135, permitting the rapid, controlled, efficient and safe delivery of cargo containers individually by water. Ballast units 160, deployment systems 171-176 and control via remote units 181 are also disclosed. These improvements allow the containers 105, utilizing their inherent buoyancy, to approach a shore autonomously according to a preplanned or remote controlled route to a specific location and in a specific order of arrival, thereby reducing the number of cargo handlers required, speeding the delivery process to the shore, and eliminating the need for high-technology pier-side equipment. The present invention allows the transfer of cargo at primitive shore sites as well modem pier facilities, and expedites the delivery of such cargo wherever needed.

WO 2004/103830 A2

For two-letter codes and other abbreviations, refer to the "Guidance Notes on Codes and Abbreviations" appearing at the beginning of each regular issue of the PCT Gazette.