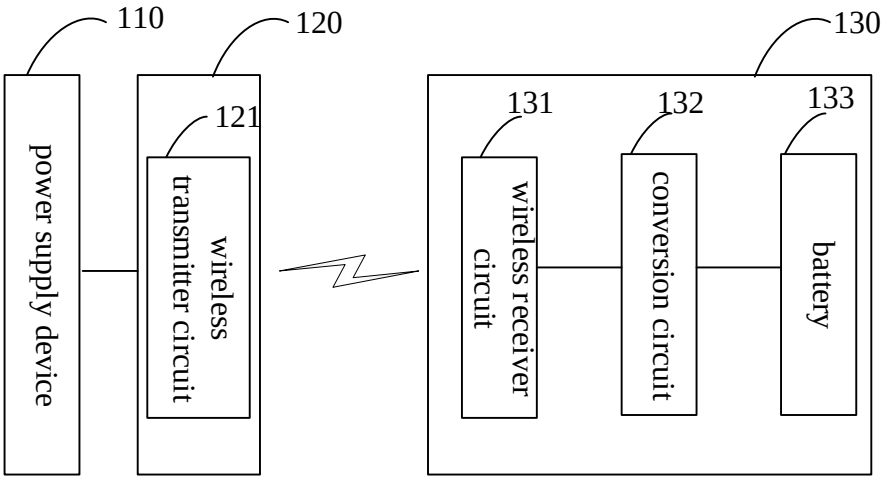

FIG. 1

200

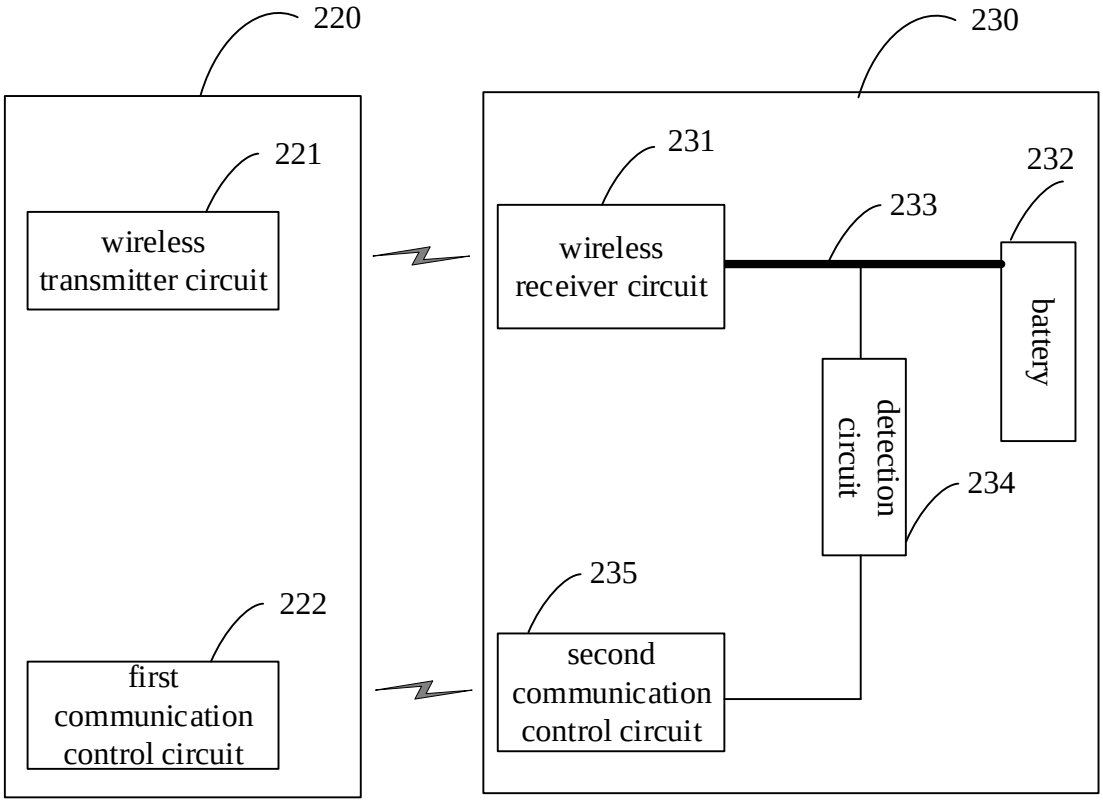

FIG. 2

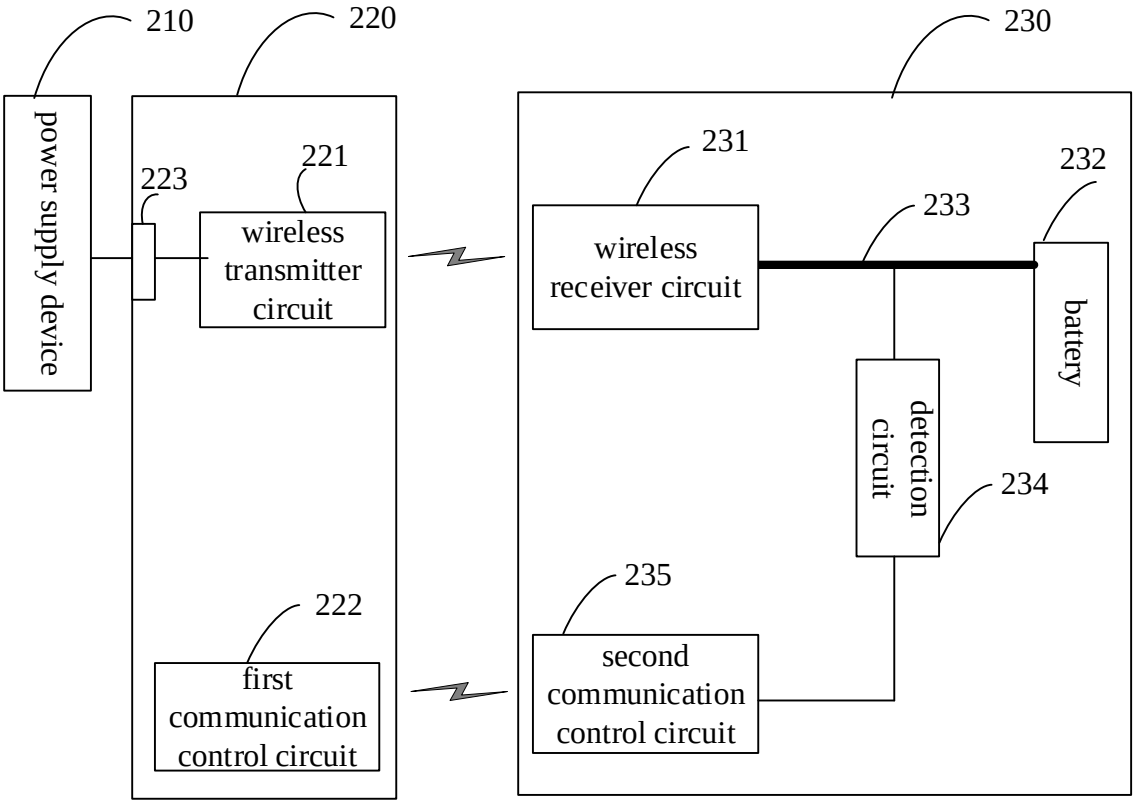
210
220
230
power supply device
223
221
wireless transmitter circuit
231
232
233
wireless receiver circuit
battery
detection circuit
234
235
222
first communication control circuit
second communication control circuit

FIG. 3

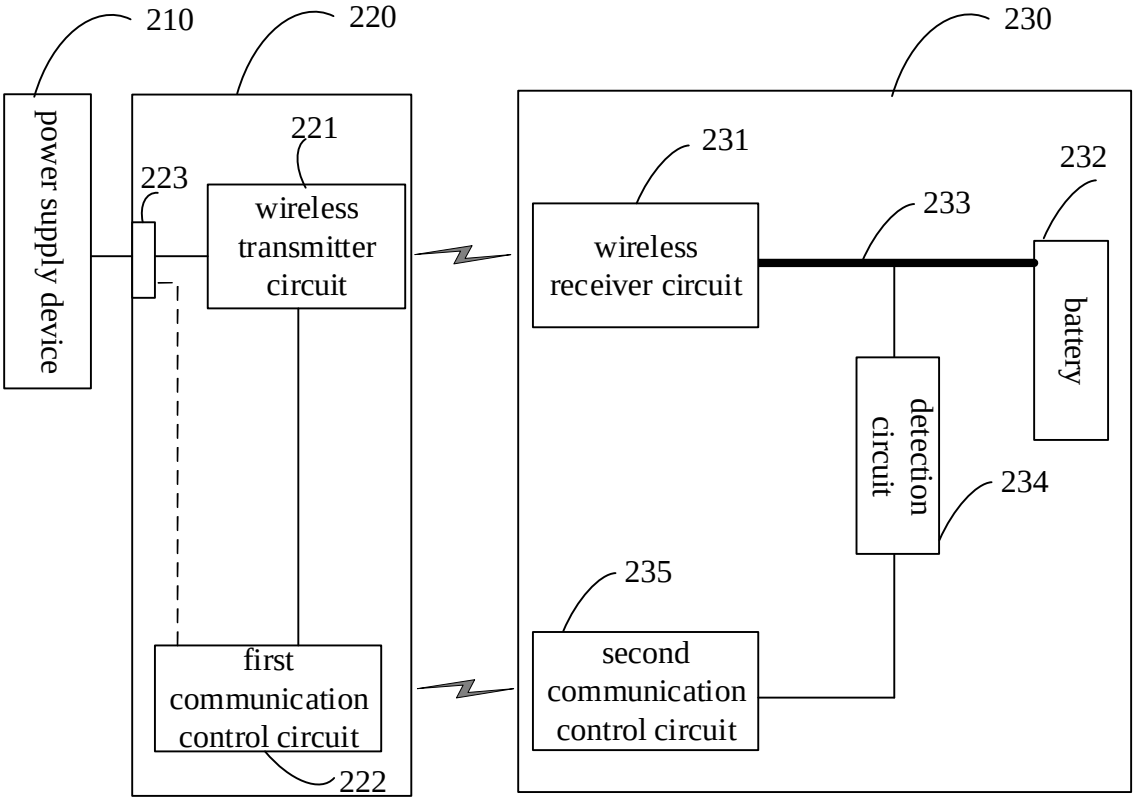
210
220
230
power supply device
221
223
wireless transmitter circuit
231
232
233
wireless receiver circuit
battery
detection circuit
234
235
first communication control circuit
222
second communication control circuit

FIG. 4

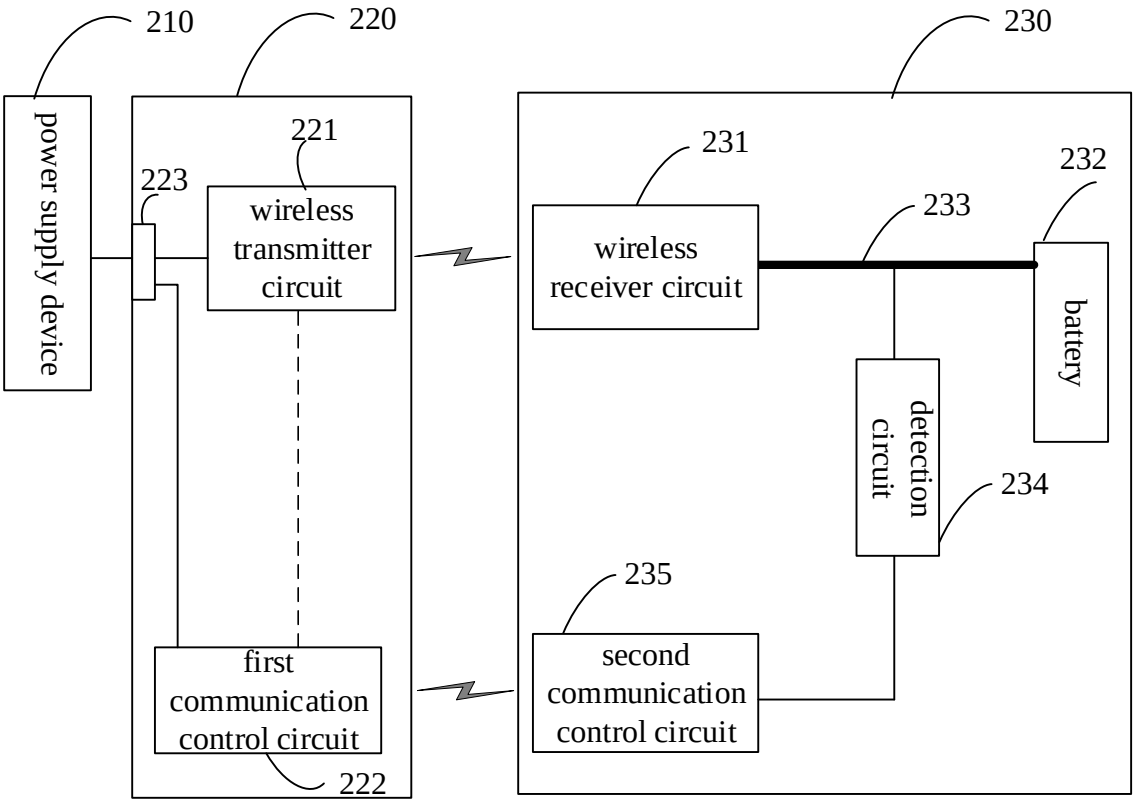
210
220
230
power supply device
221
223
wireless transmitter circuit
231
232
233
wireless receiver circuit
battery
detection circuit
234
235
second communication control circuit
first communication control circuit
222

FIG. 5

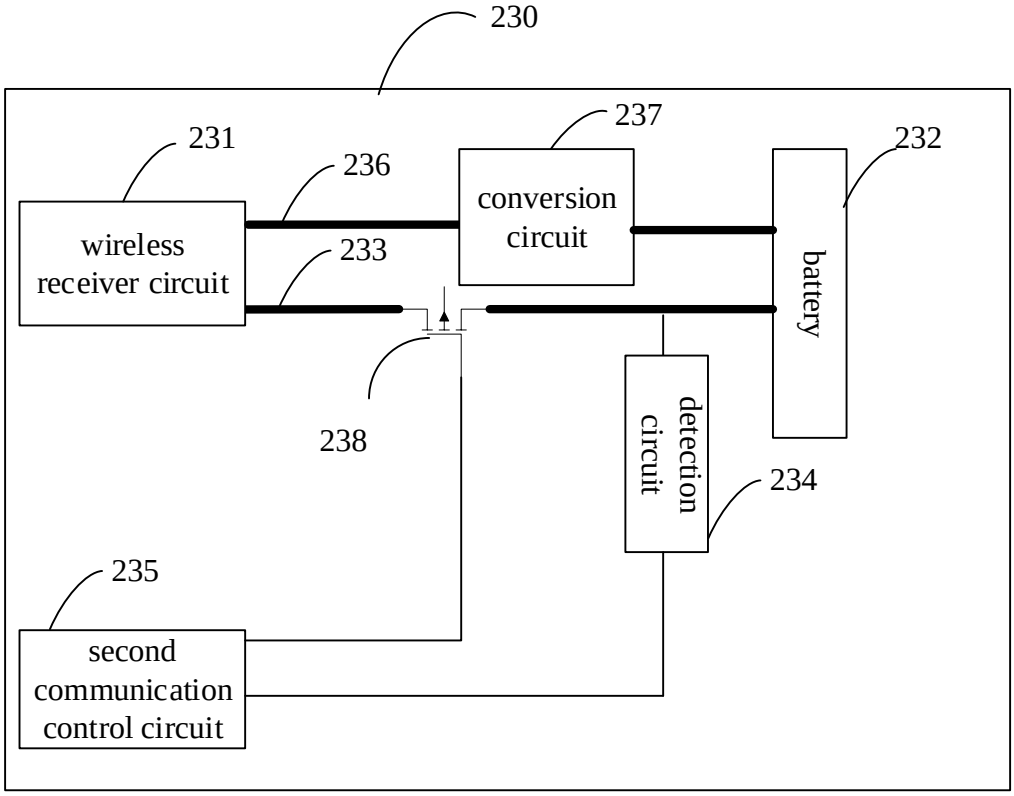
230
231
236
237
232
conversion circuit
wireless receiver circuit
233
battery
238
detection circuit
234
235
second communication control circuit

FIG. 6

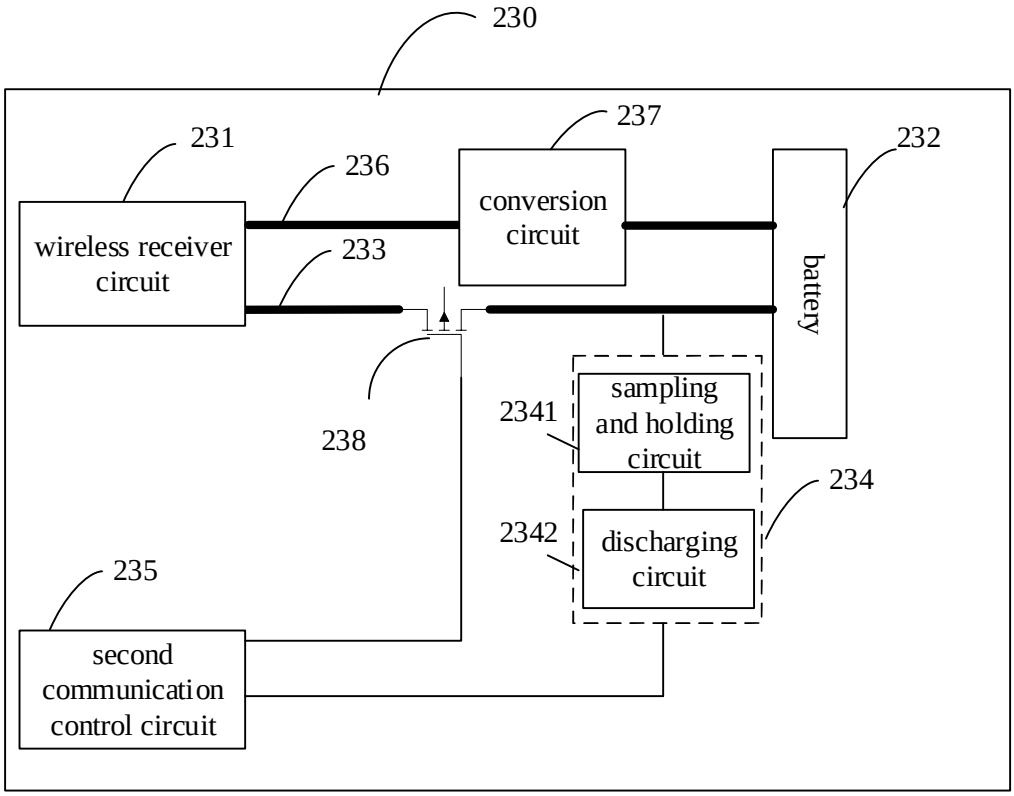
230
231
236
237
232
wireless receiver circuit
conversion circuit
battery
233
238
2341
sampling and holding circuit
234
2342
discharging circuit
235
second communication control circuit

FIG. 7

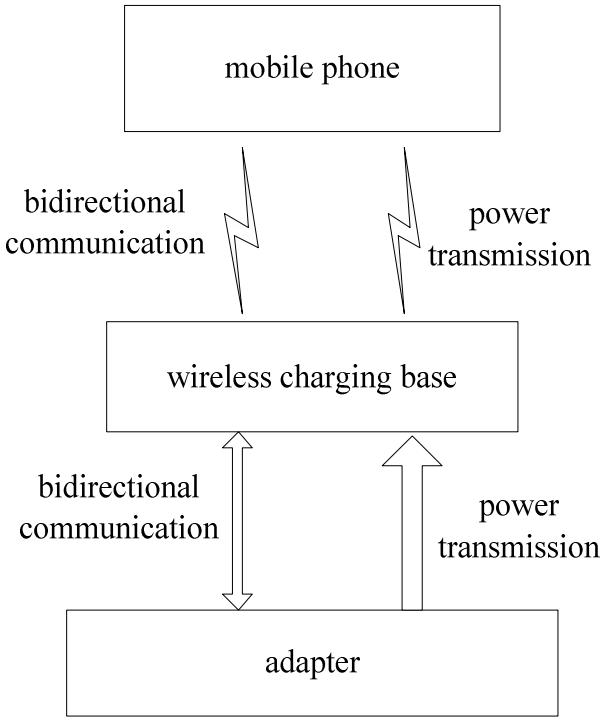
mobile phone
bidirectional communication
power transmission
wireless charging base
bidirectional communication
power transmission
adapter

FIG. 8

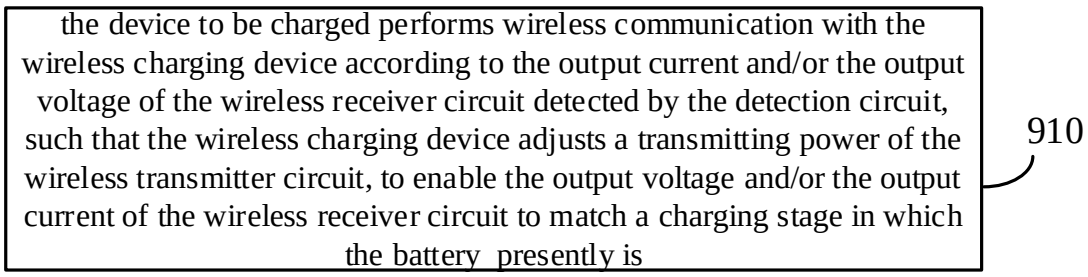

FIG. 9

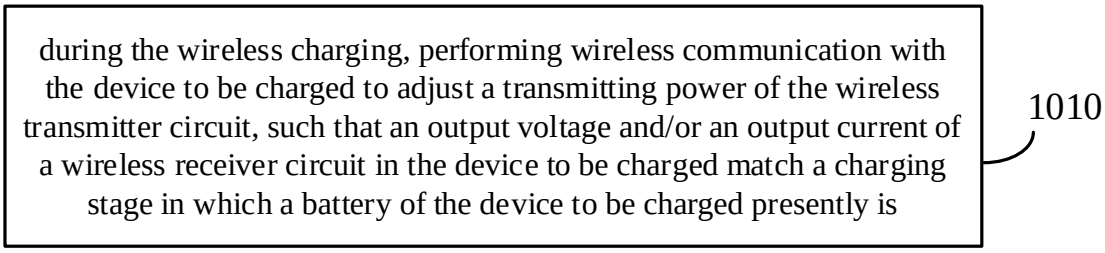

FIG. 10

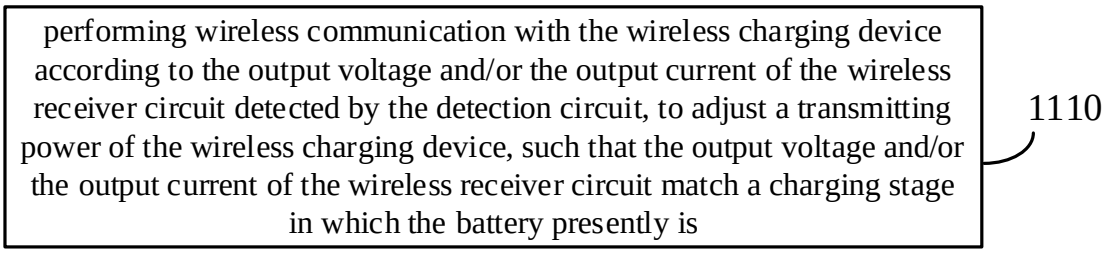

FIG. 11