(12) INTERNATIONAL APPLICATION PUBLISHED UNDER THE PATENT COOPERATION TREATY (PCT)

(19) World Intellectual Property Organization
International Bureau

(43) International Publication Date
13 May 2004 (13.05.2004)

PCT

(10) International Publication Number
WO 2004/039191 A1

(51) International Patent Classification[7]: A42B 1/06, 1/02, 3/10

(21) International Application Number:
PCT/AU2003/001437

(22) International Filing Date: 31 October 2003 (31.10.2003)

(25) Filing Language: English

(26) Publication Language: English

(30) Priority Data:
2002953193 1 November 2002 (01.11.2002) AU

(71) Applicant and
(72) Inventor: **BEDFORD, Nicholas** [AU/AU]; 18 Kildonan Road, Warradale, S.A. 5046 (AU).

(74) Agent: **HOWARD, Schulze, K.**; Collison & Co, 117 King William Street, Adelaide S.A. 5000 (AU).

(81) Designated States *(national)*: AE, AG, AL, AM, AT, AU, AZ, BA, BB, BG, BR, BW, BY, BZ, CA, CH, CN, CO, CR, CU, CZ, DE, DK, DM, DZ, EC, EE, EG, ES, FI, GB, GD, GE, GH, GM, HR, HU, ID, IL, IN, IS, JP, KE, KG, KP, KR, KZ, LC, LK, LR, LS, LT, LU, LV, MA, MD, MG, MK, MN, MW, MX, MZ, NI, NO, NZ, OM, PG, PH, PL, PT, RO, RU, SC, SD, SE, SG, SK, SL, SY, TJ, TM, TN, TR, TT, TZ, UA, UG, US, UZ, VC, VN, YU, ZA, ZM, ZW.

(84) Designated States *(regional)*: ARIPO patent (BW, GH, GM, KE, LS, MW, MZ, SD, SL, SZ, TZ, UG, ZM, ZW), Eurasian patent (AM, AZ, BY, KG, KZ, MD, RU, TJ, TM), European patent (AT, BE, BG, CH, CY, CZ, DE, DK, EE, ES, FI, FR, GB, GR, HU, IE, IT, LU, MC, NL, PT, RO, SE, SI, SK, TR), OAPI patent (BF, BJ, CF, CG, CI, CM, GA, GN, GQ, GW, ML, MR, NE, SN, TD, TG).

Published:
— *with international search report*
— *with amended claims and statement*

[Continued on next page]

(54) Title: COOLING HELMET

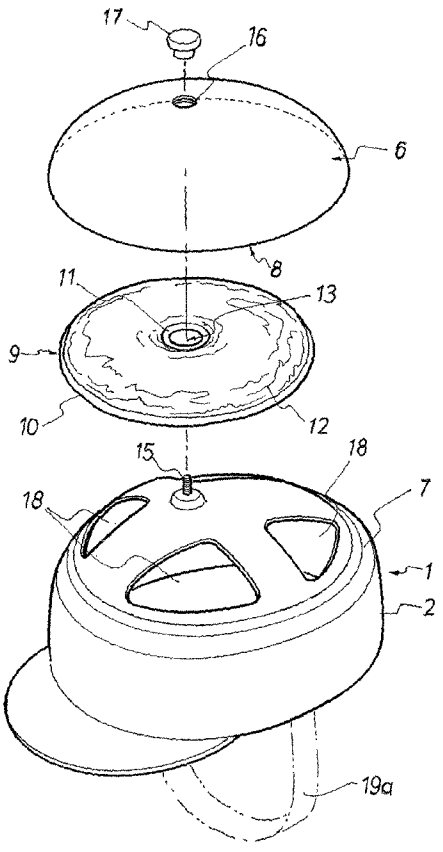

(57) Abstract: An impact protective item of headwear (1) which has inner (2) and outer (6) impact resistant parts nesting one with respect to the other and shaped to hold between them a replaceable pouch (9) with a gel cooling or otherwise of a user.

WO 2004/039191 A1

For two-letter codes and other abbreviations, refer to the "Guidance Notes on Codes and Abbreviations" appearing at the beginning of each regular issue of the PCT Gazette.