FIG. 1

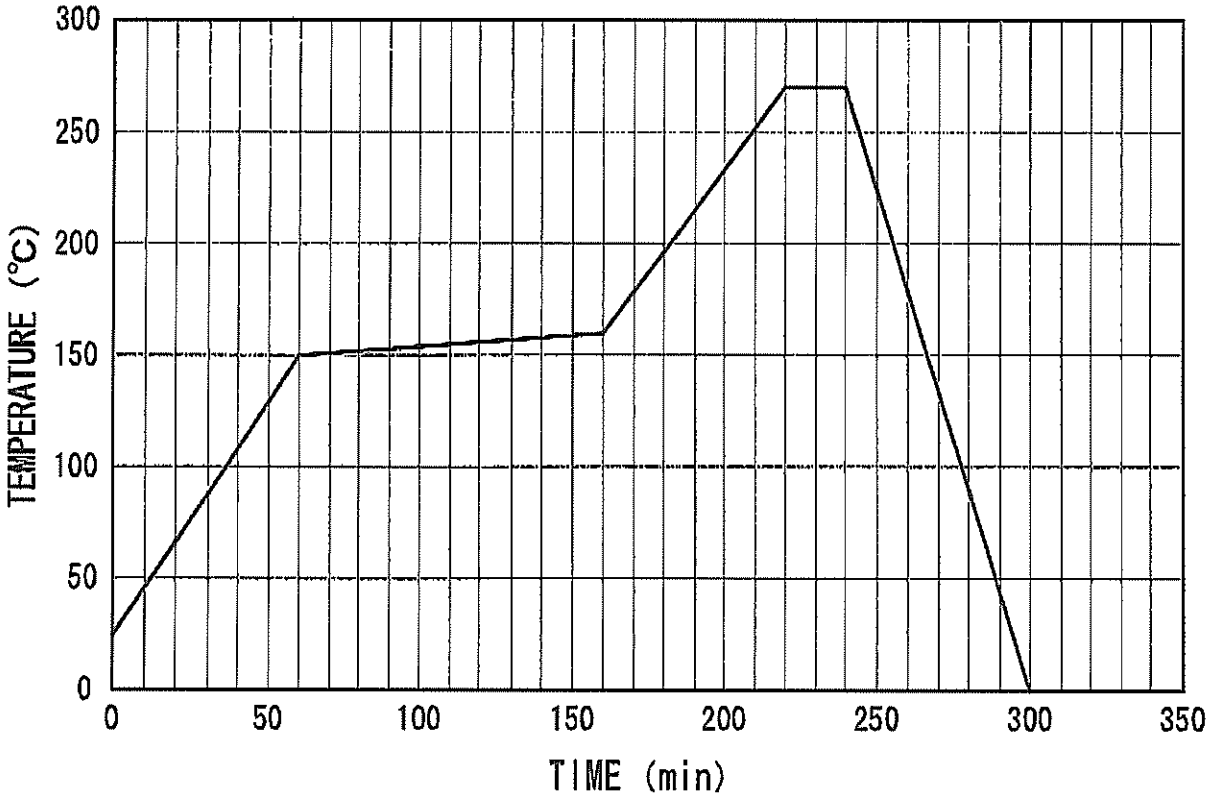
300
250
200
150
100
50
0
TEMPERATURE (°C)
0
50
100
150
200
250
300
350
TIME (min)

FIG. 2

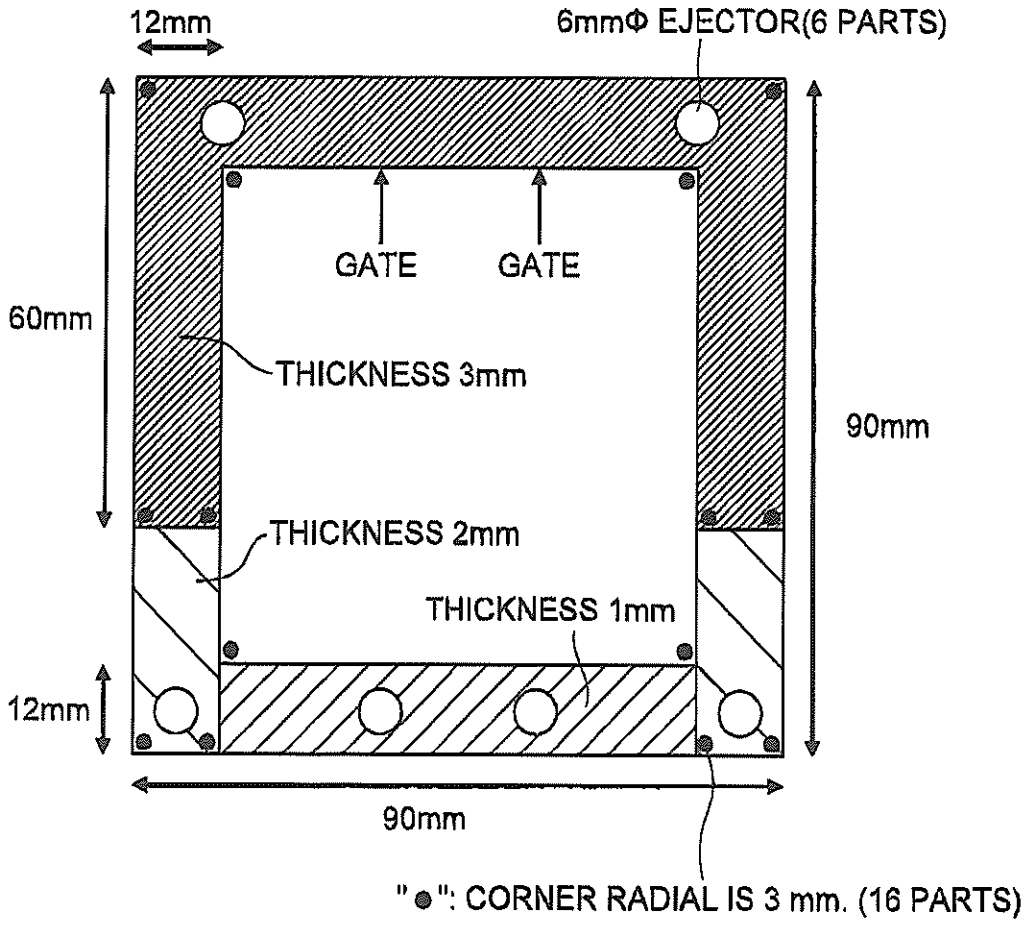
12mm
6mmΦ EJECTOR(6 PARTS)
GATE
GATE
60mm
THICKNESS 3mm
90mm
THICKNESS 2mm
THICKNESS 1mm
12mm
90mm
"●": CORNER RADIAL IS 3 mm. (16 PARTS)