FIG 1

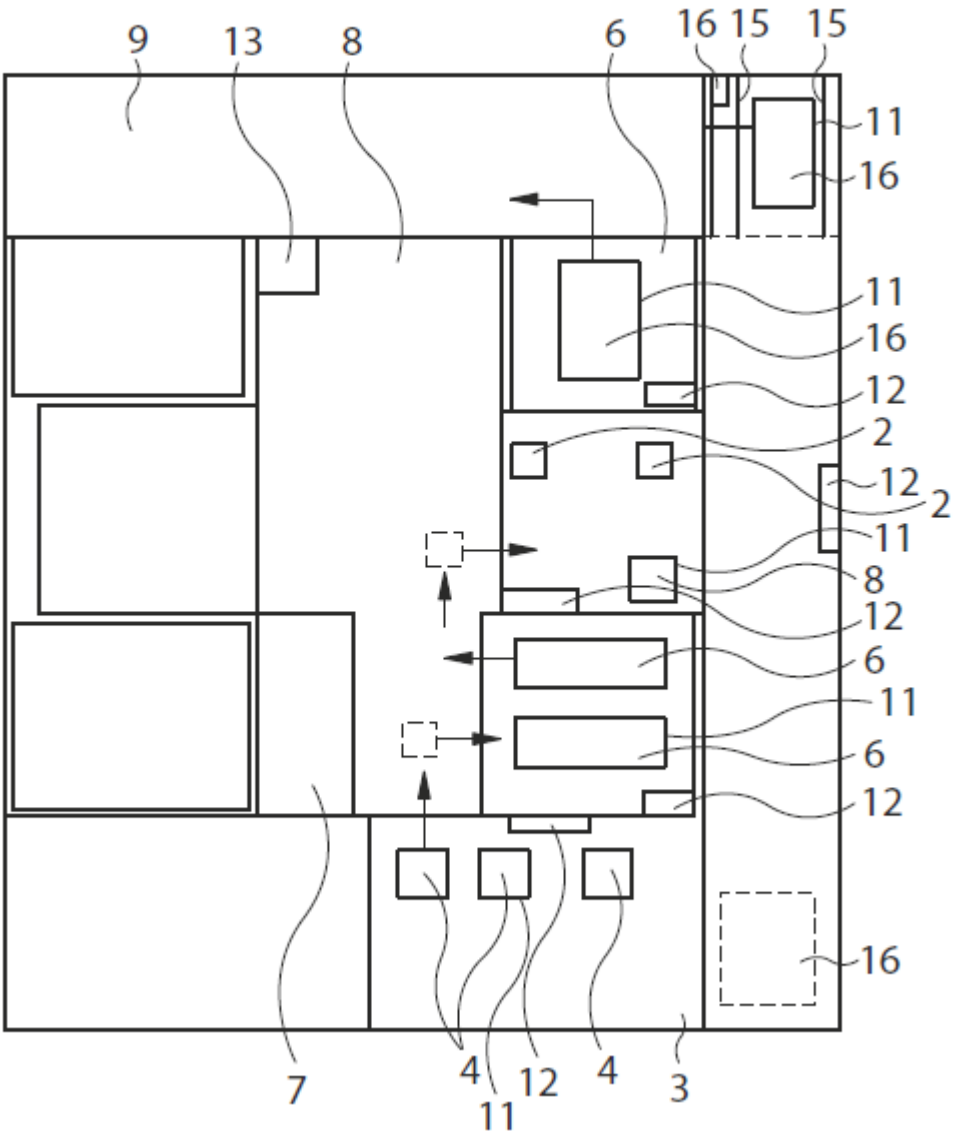

10

FIG 2

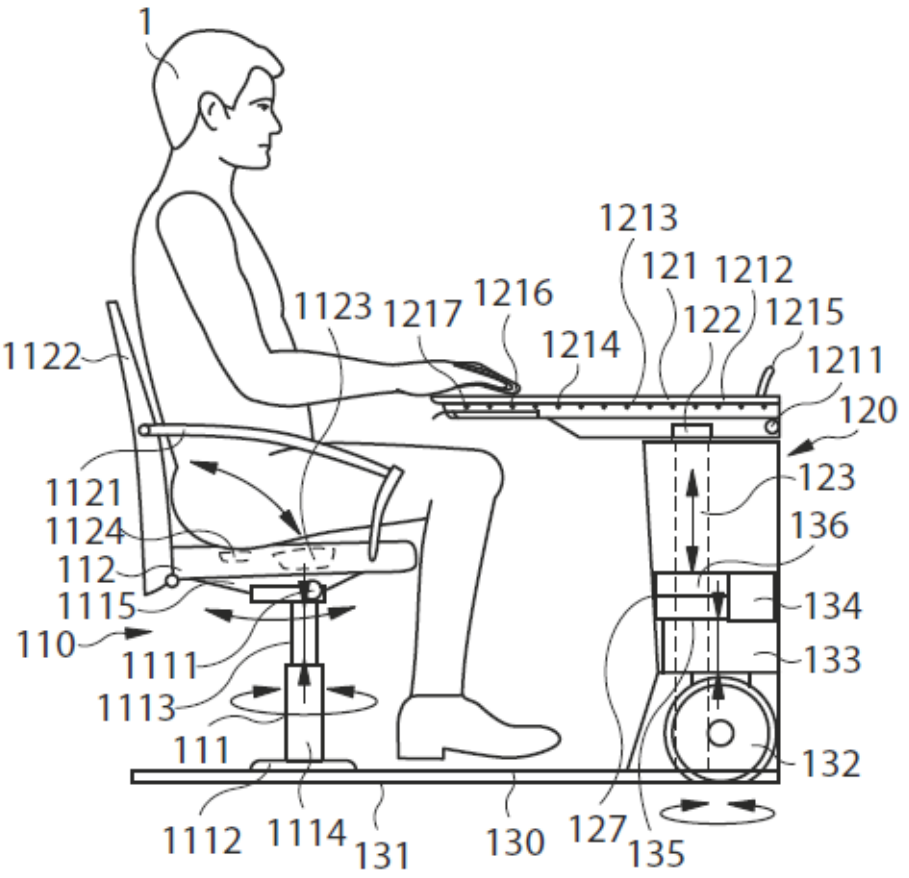
1
1213
121
1212
1123
1217
1216
122
1215
1122
1214
1211
120
123
1121
1124
136
112
1115
134
110
1111
133
1113
111
132
1112
1114
131
130
127
135

FIG 3

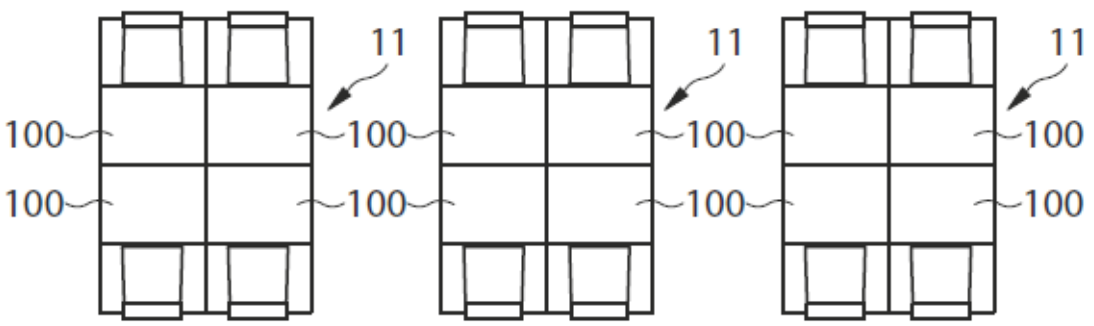
11
11
11
100
100
100
100
100
100
100
100

FIG 4

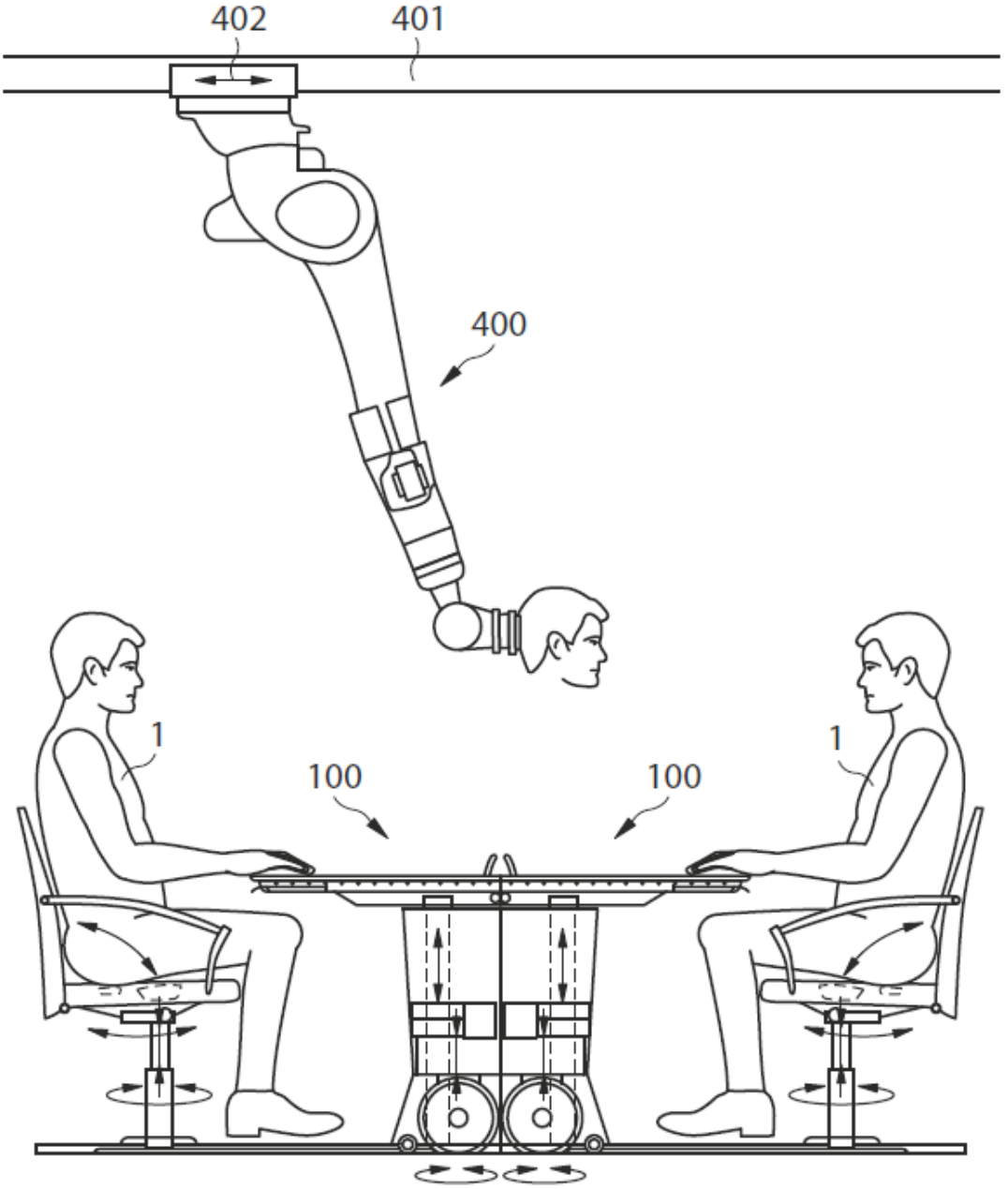

FIG 5a

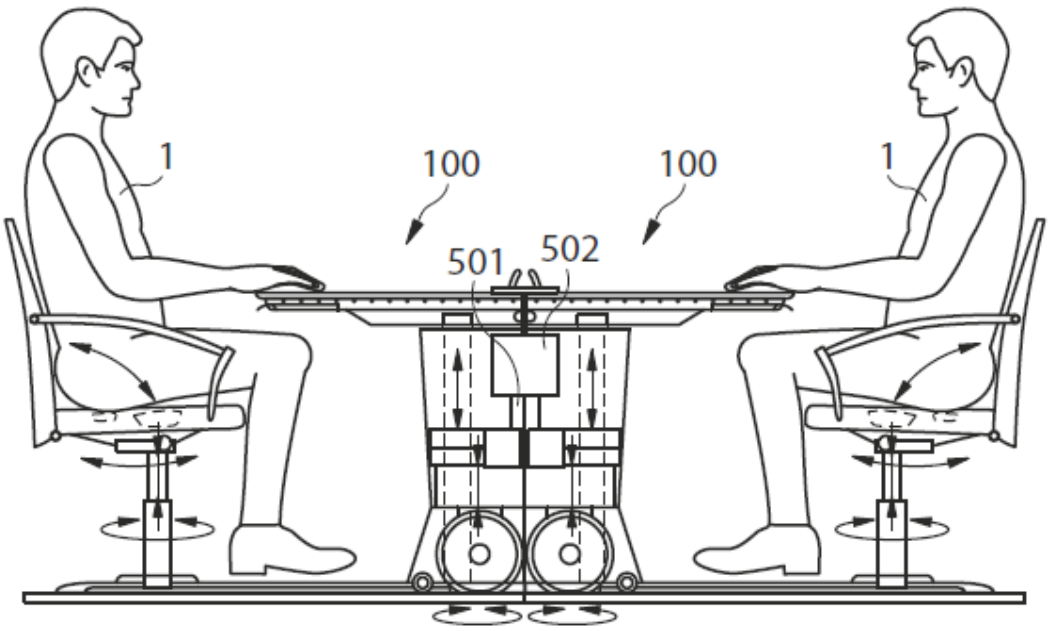

FIG 5b

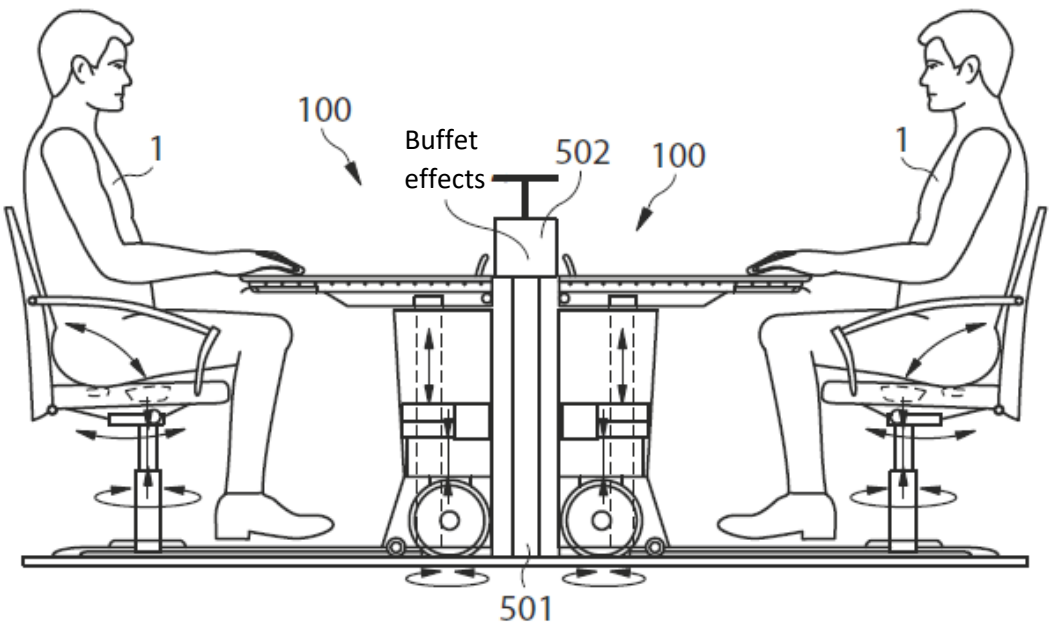

FIG 6

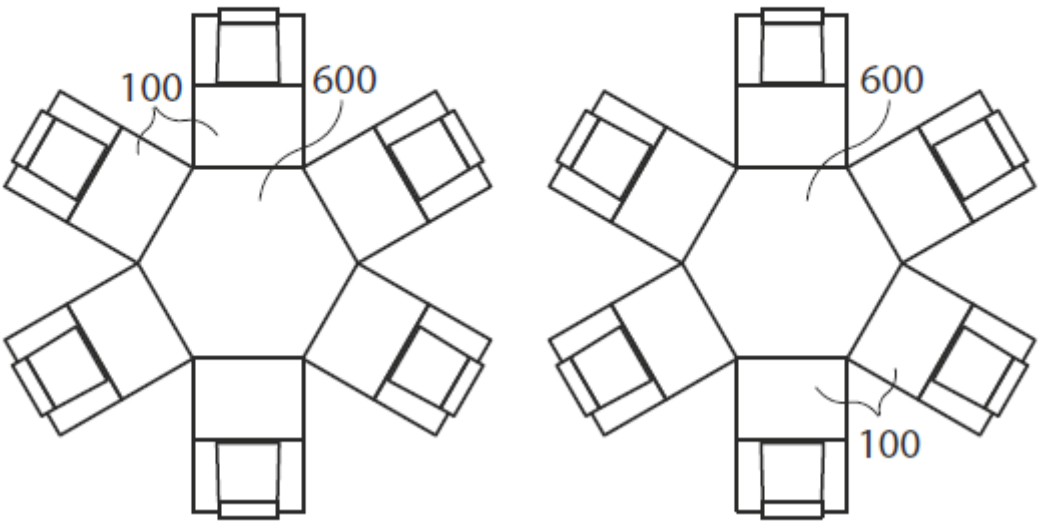

FIG 7

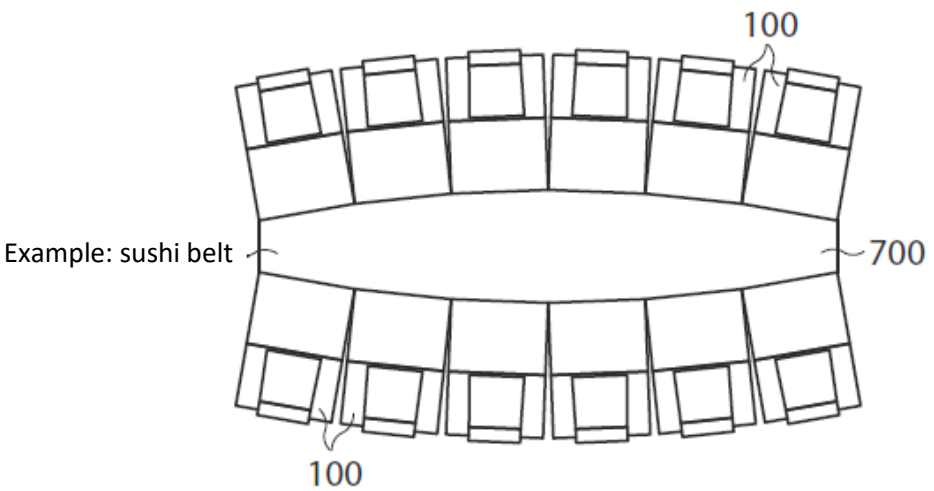

FIG 8

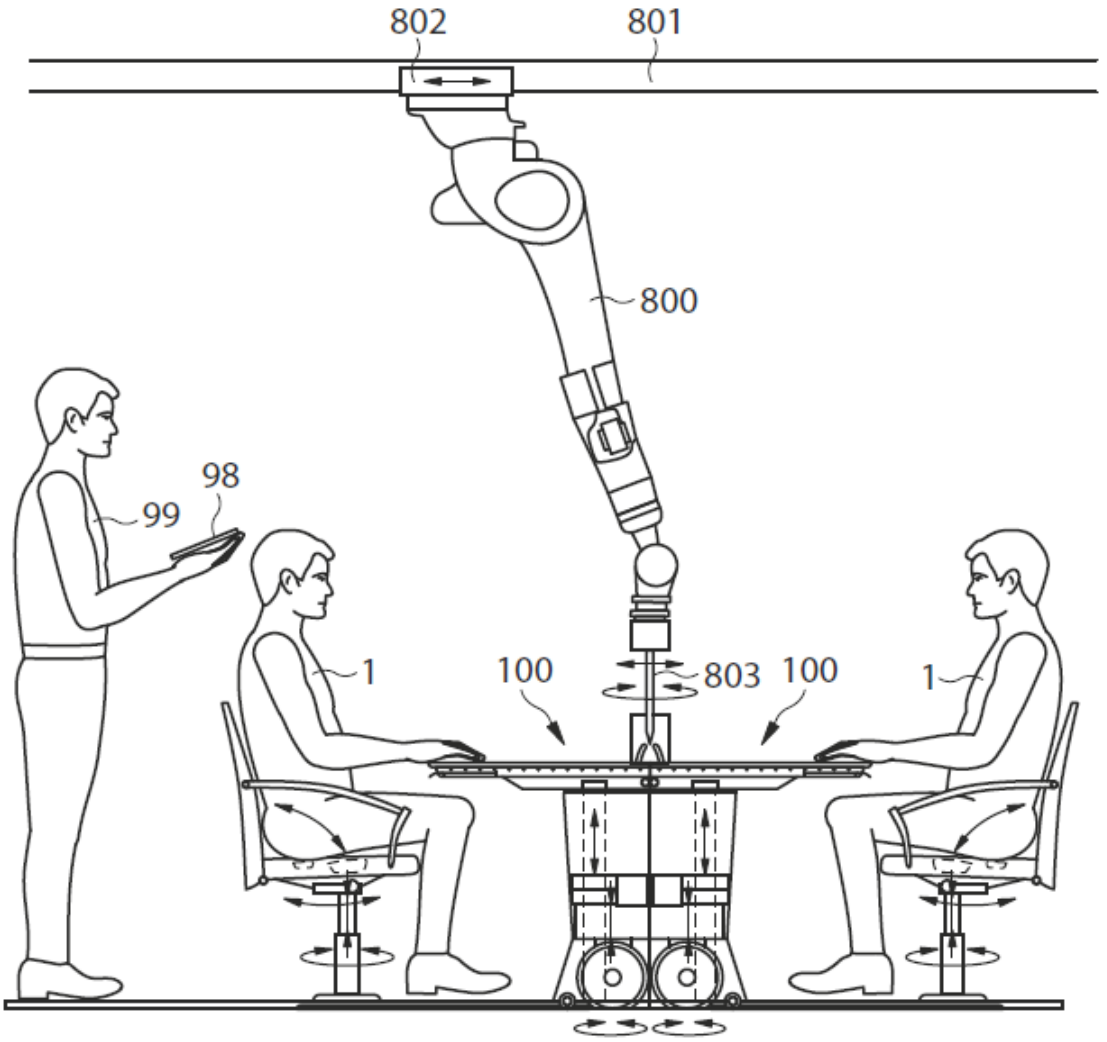

FIG 9

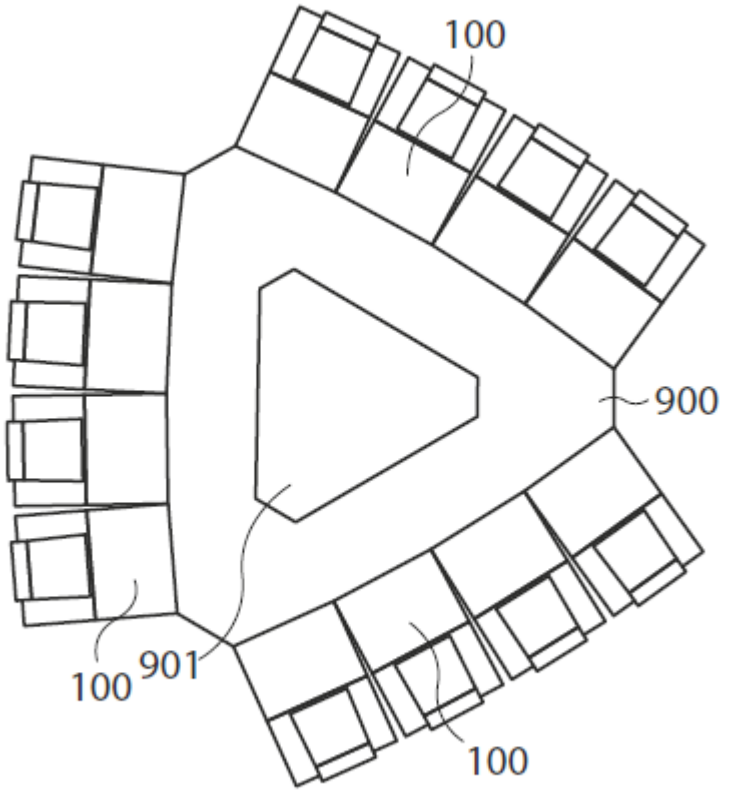

FIG 10

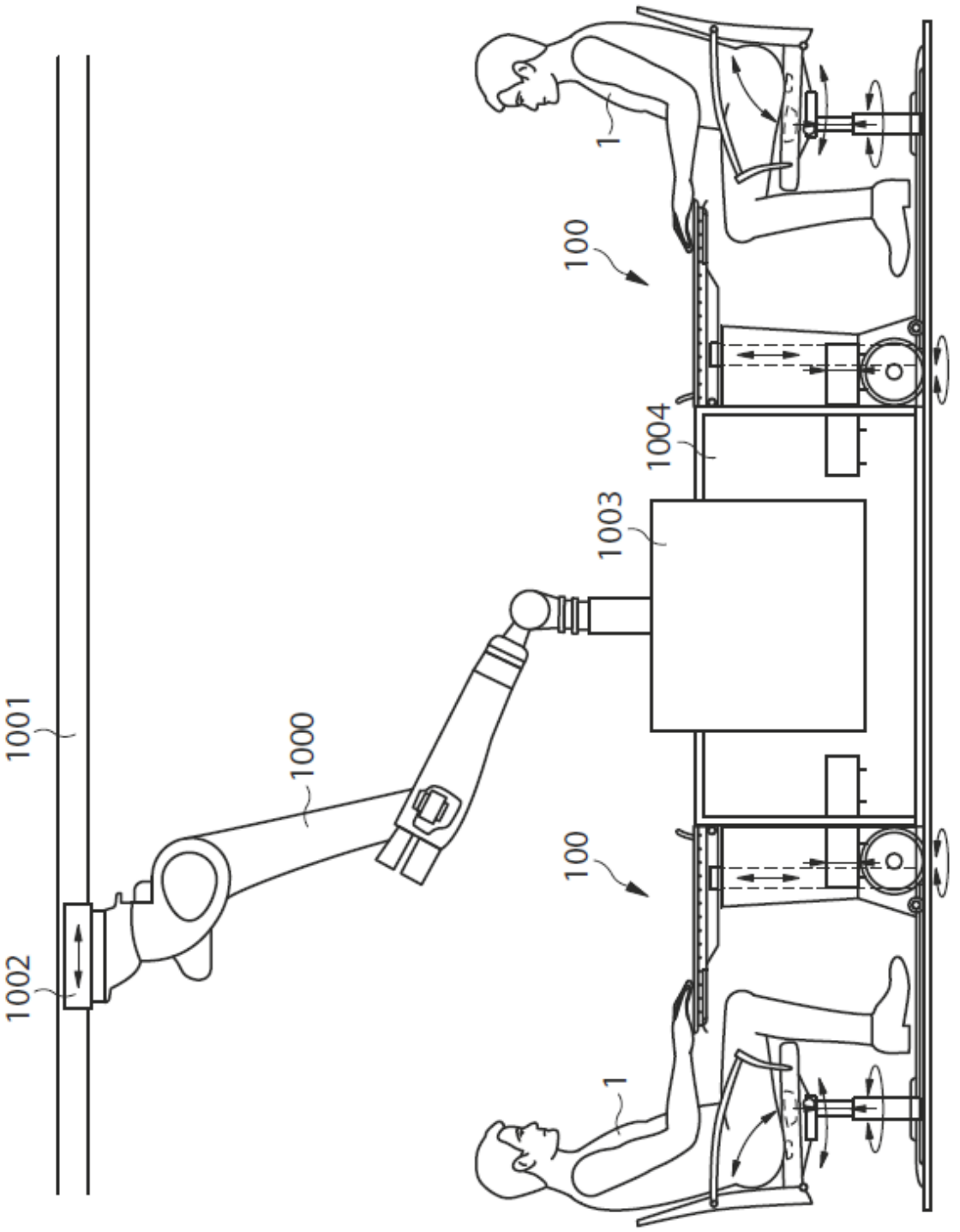

FIG 11

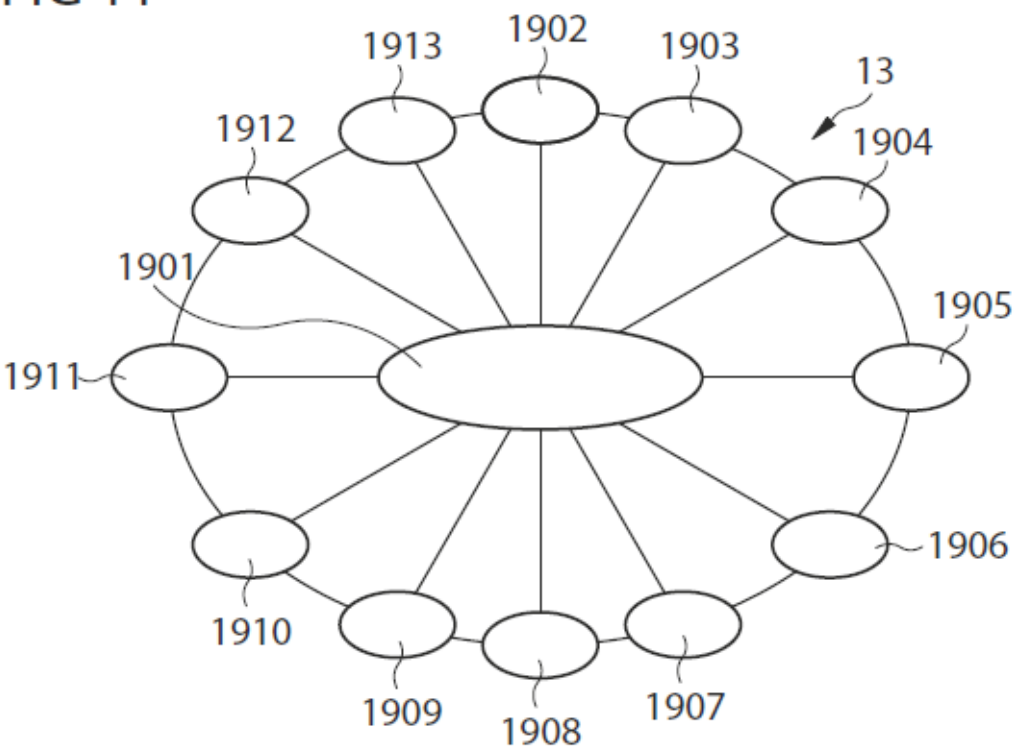
1913
1902
1903
13
1912
1904
1901
1905
1911
1906
1910
1909
1908
1907

FIG 12a

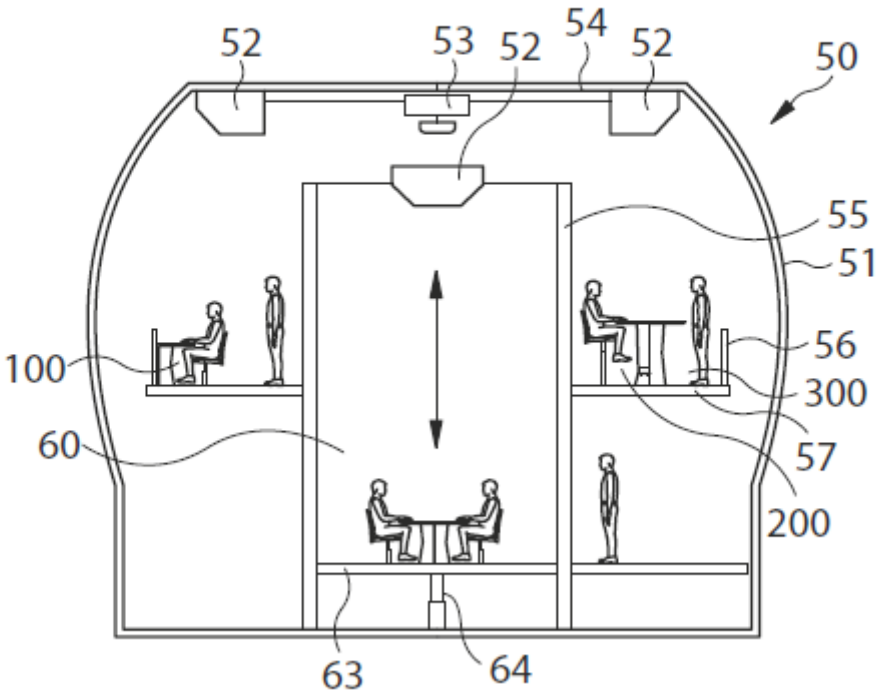

FIG 12b

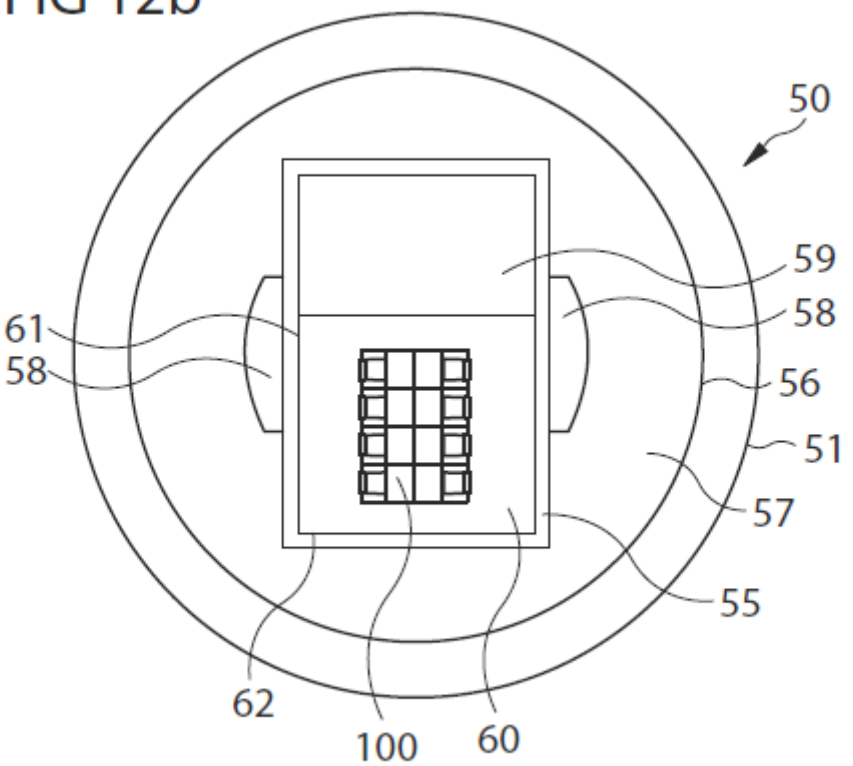

FIG 12c

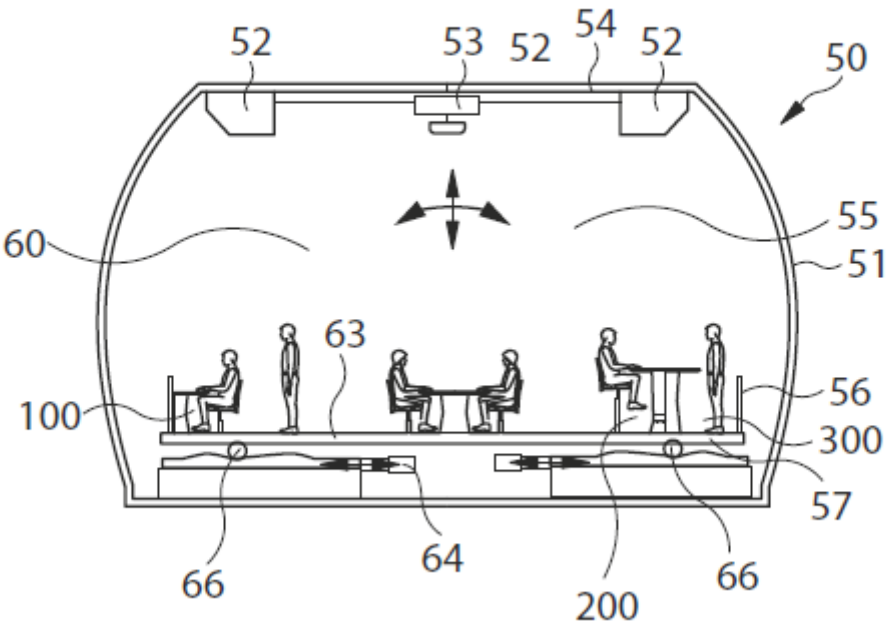

FIG 12d

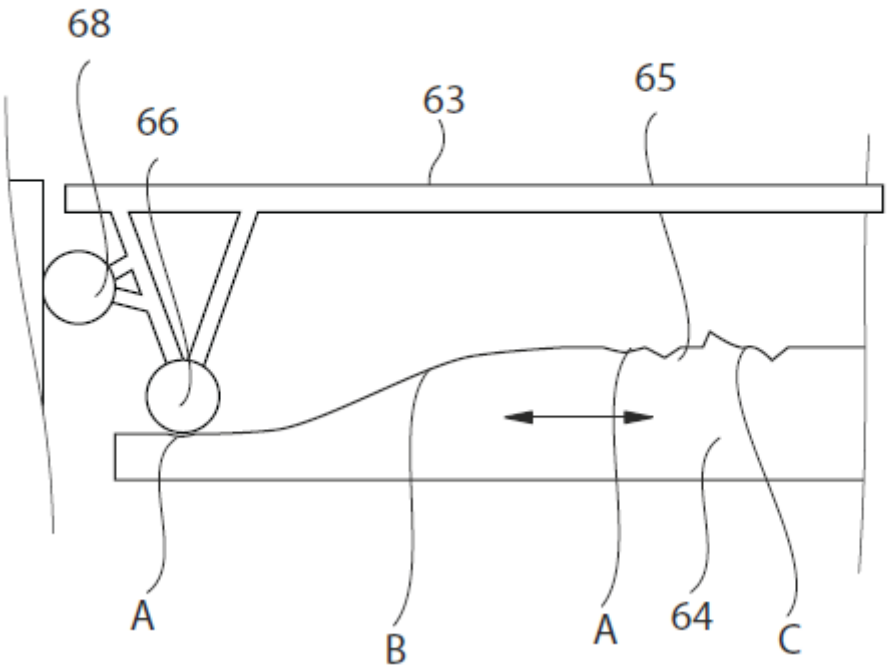

FIG 13

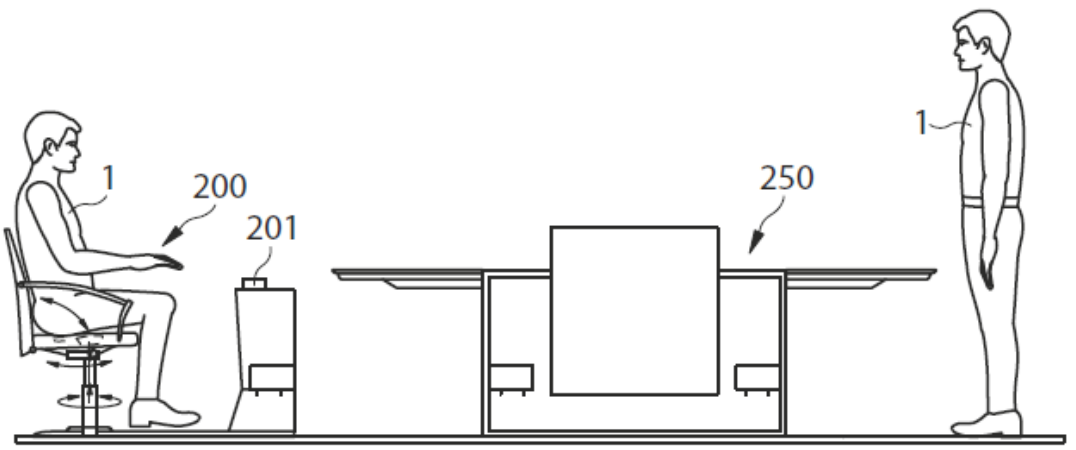

FIG 14

