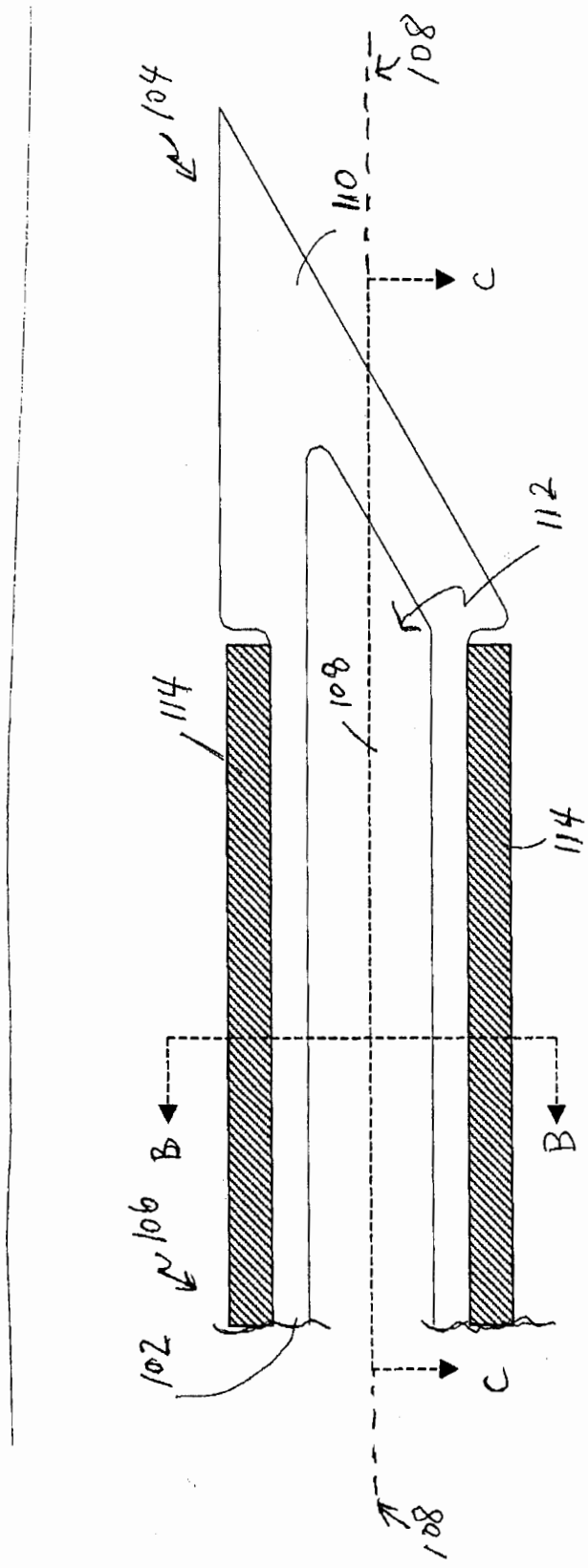

FIG. 1A

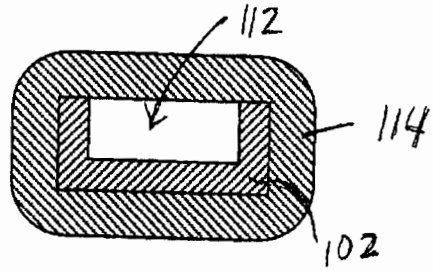

FIG. 1B

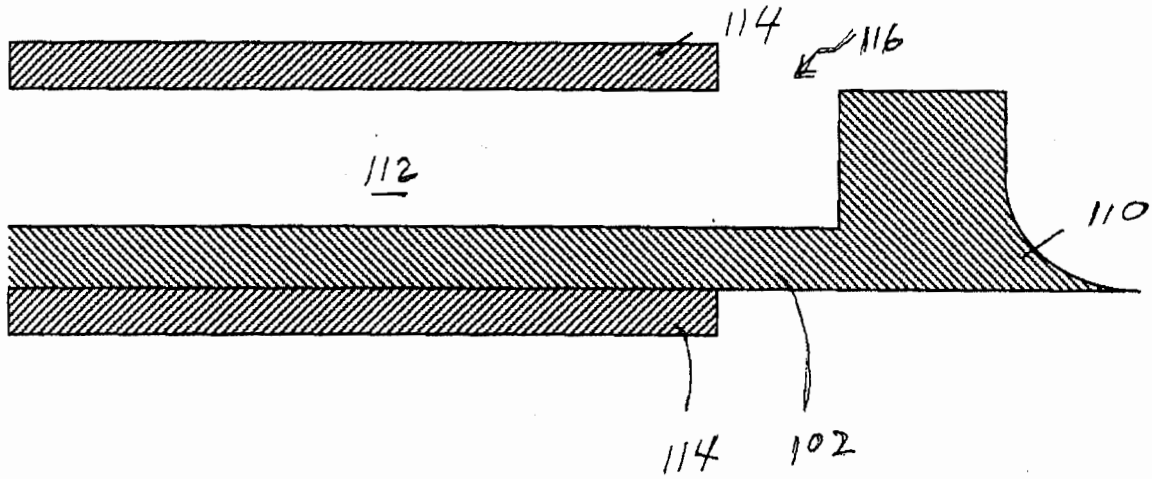

FIG. 1C

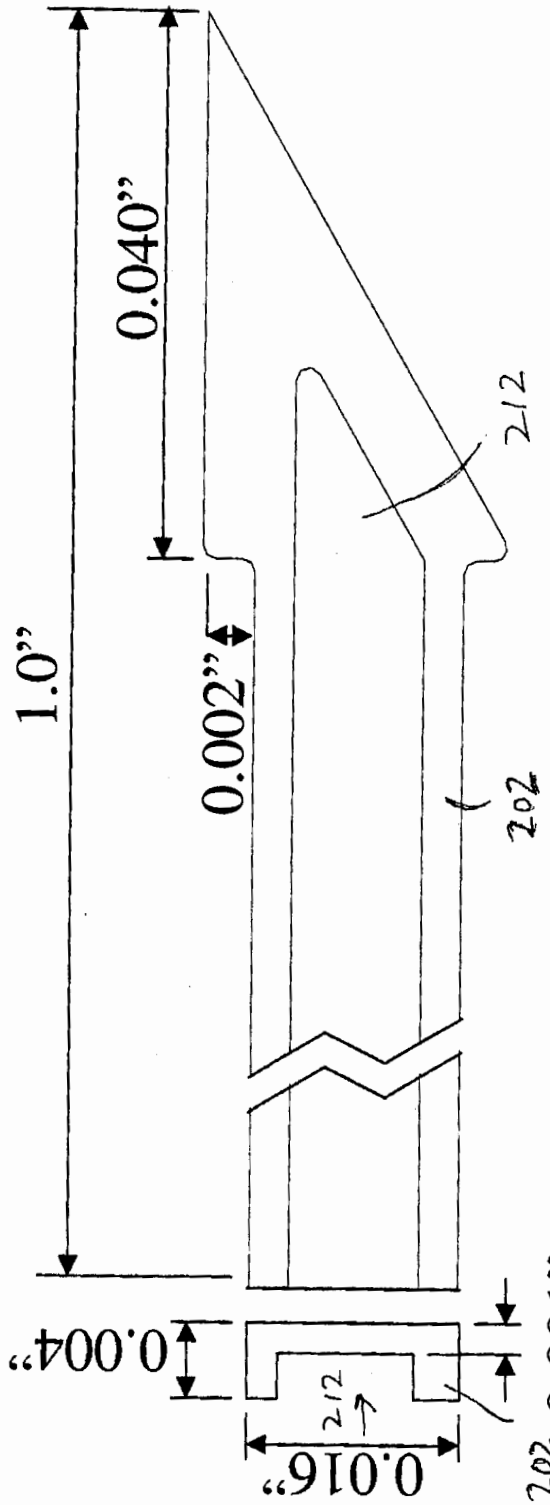

FIG. 2A

FIG. 2B

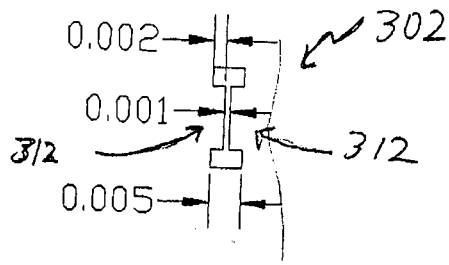

FIG. 3

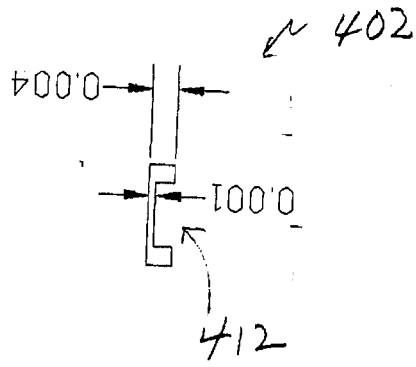

FIG. 4

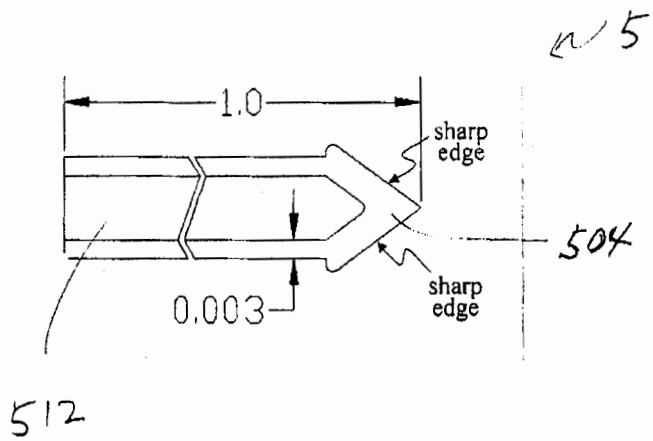
502
1.0
sharp edge
504
0.003
sharp edge
512

FIG. 5

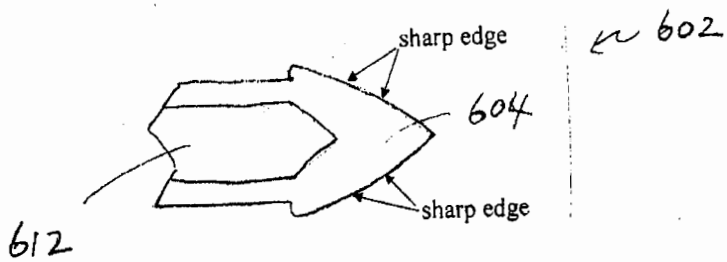
602
sharp edge
604
sharp edge
612

FIG. 6

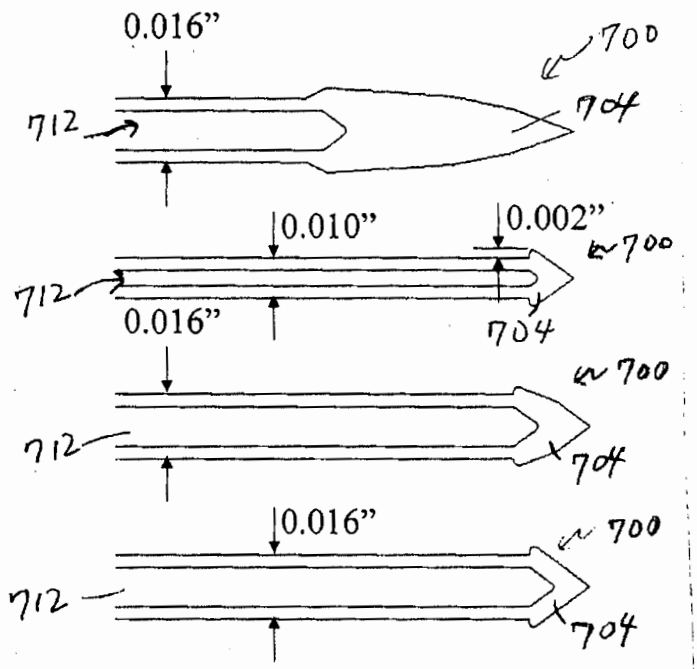

FIG. 7A

FIG. 7B

FIG. 7C.

FIG. 7D

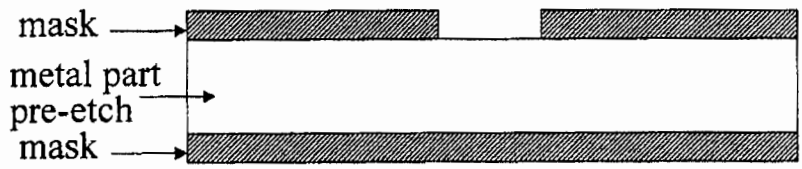
mask
metal part
pre-etch
mask

FIG 8A

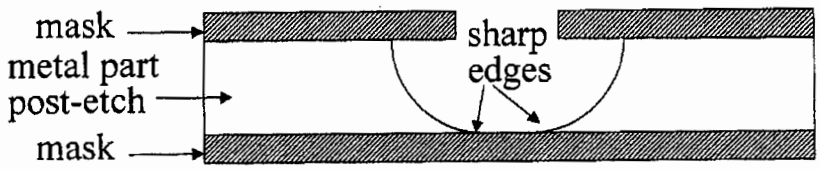
mask
metal part
post-etch
mask
sharp
edges

FIG 8B

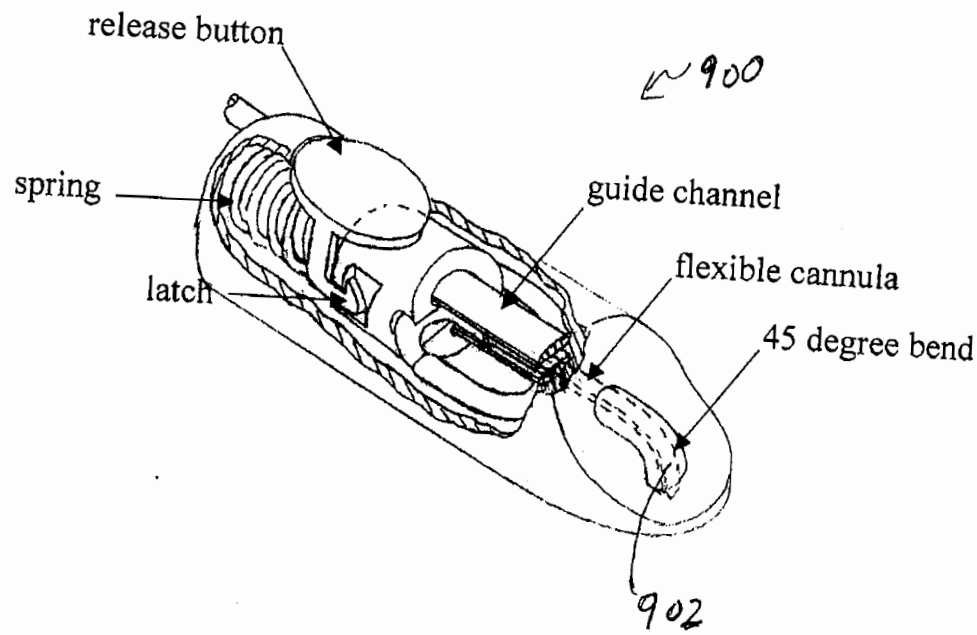
release button
900
spring
guide channel
flexible cannula
latch
45 degree bend
902

FIG. 9A

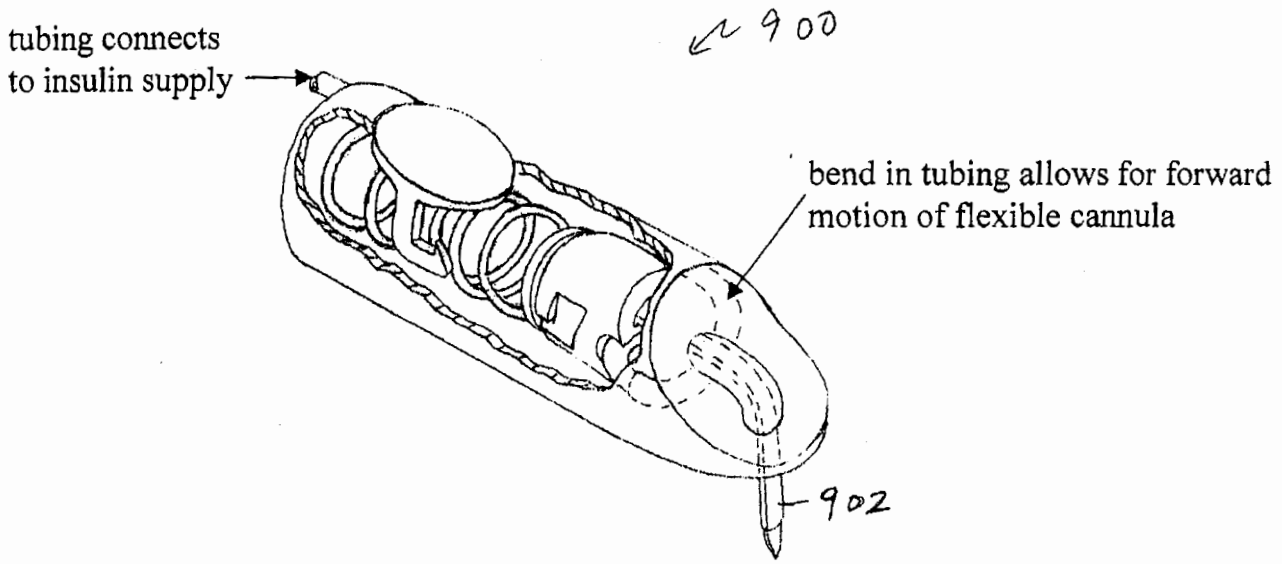
tubing connects
to insulin supply
900
bend in tubing allows for forward
motion of flexible cannula
902

FIG. 9B

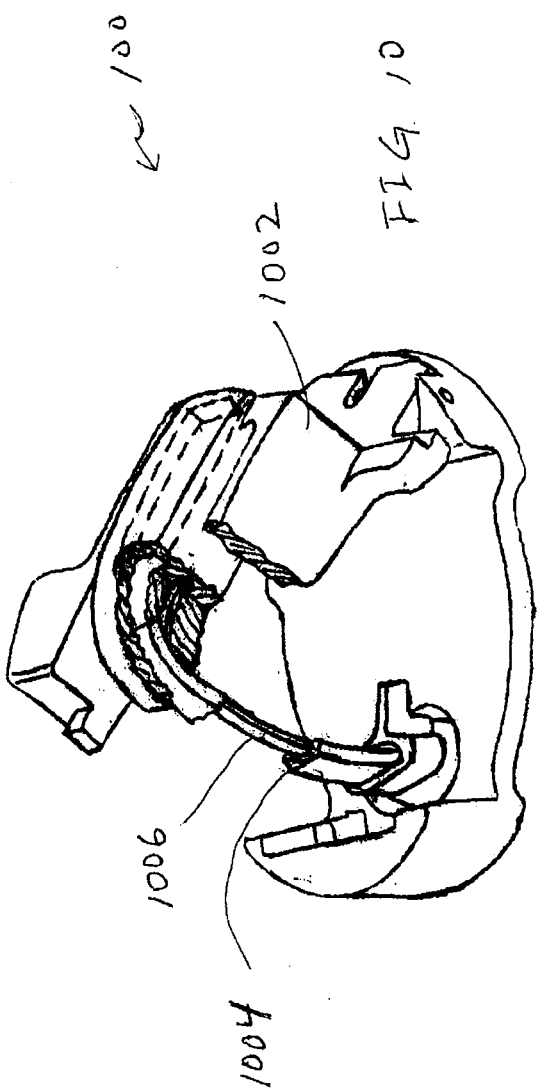

FIG. 10

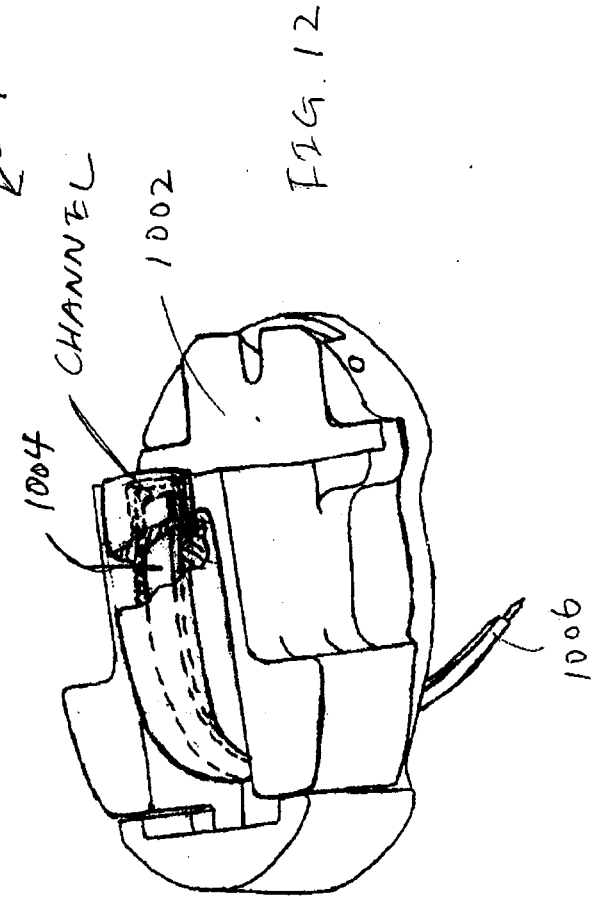

FIG. 12

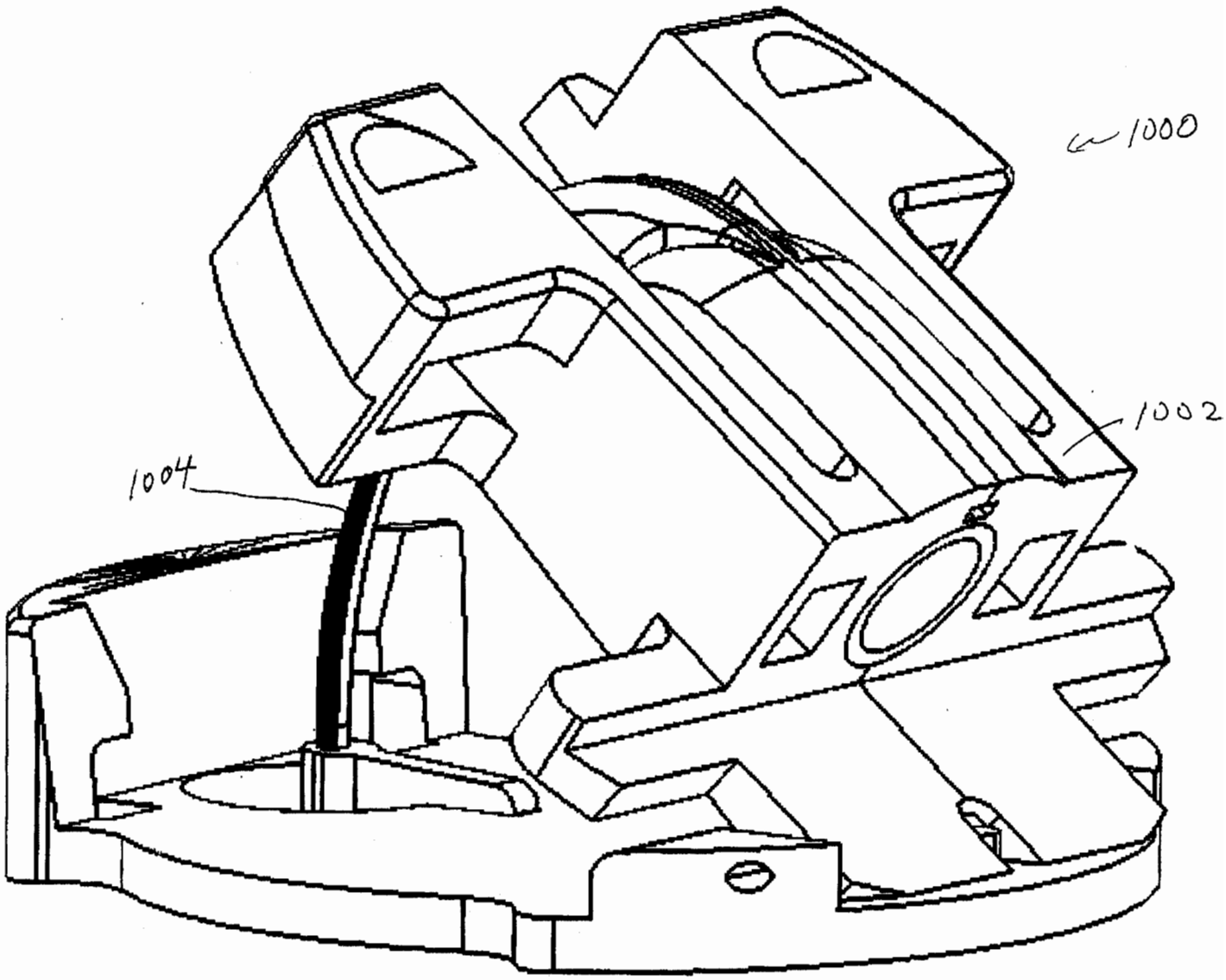

FIG. 11

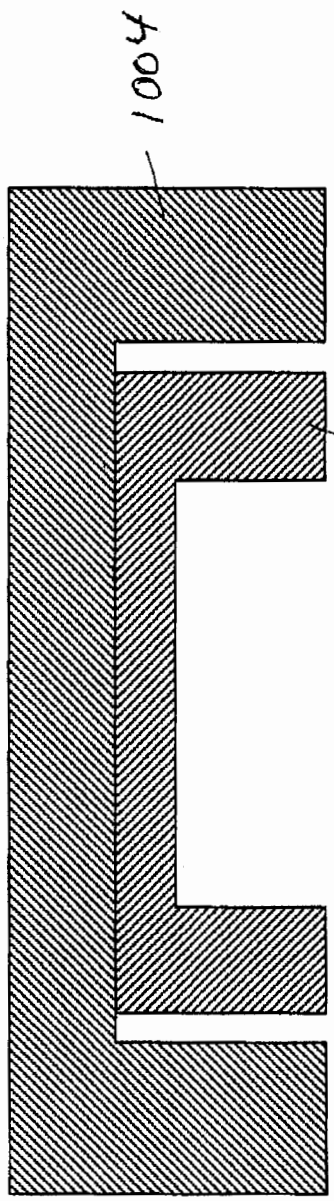

FIG. 13