FIG. 1

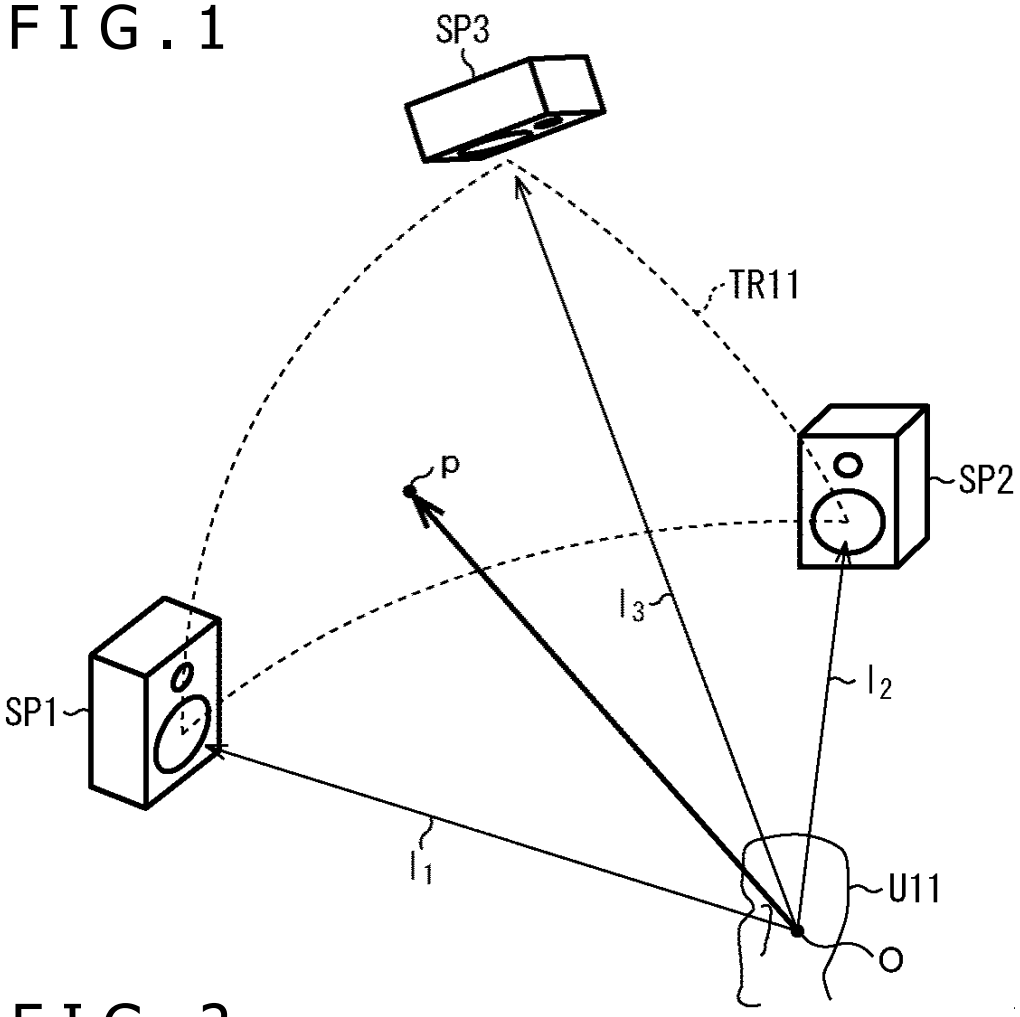

FIG. 2

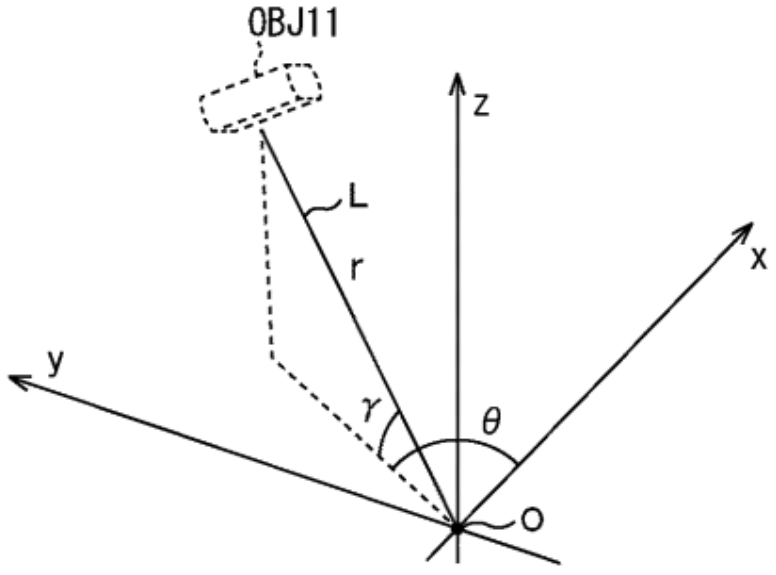

FIG.3

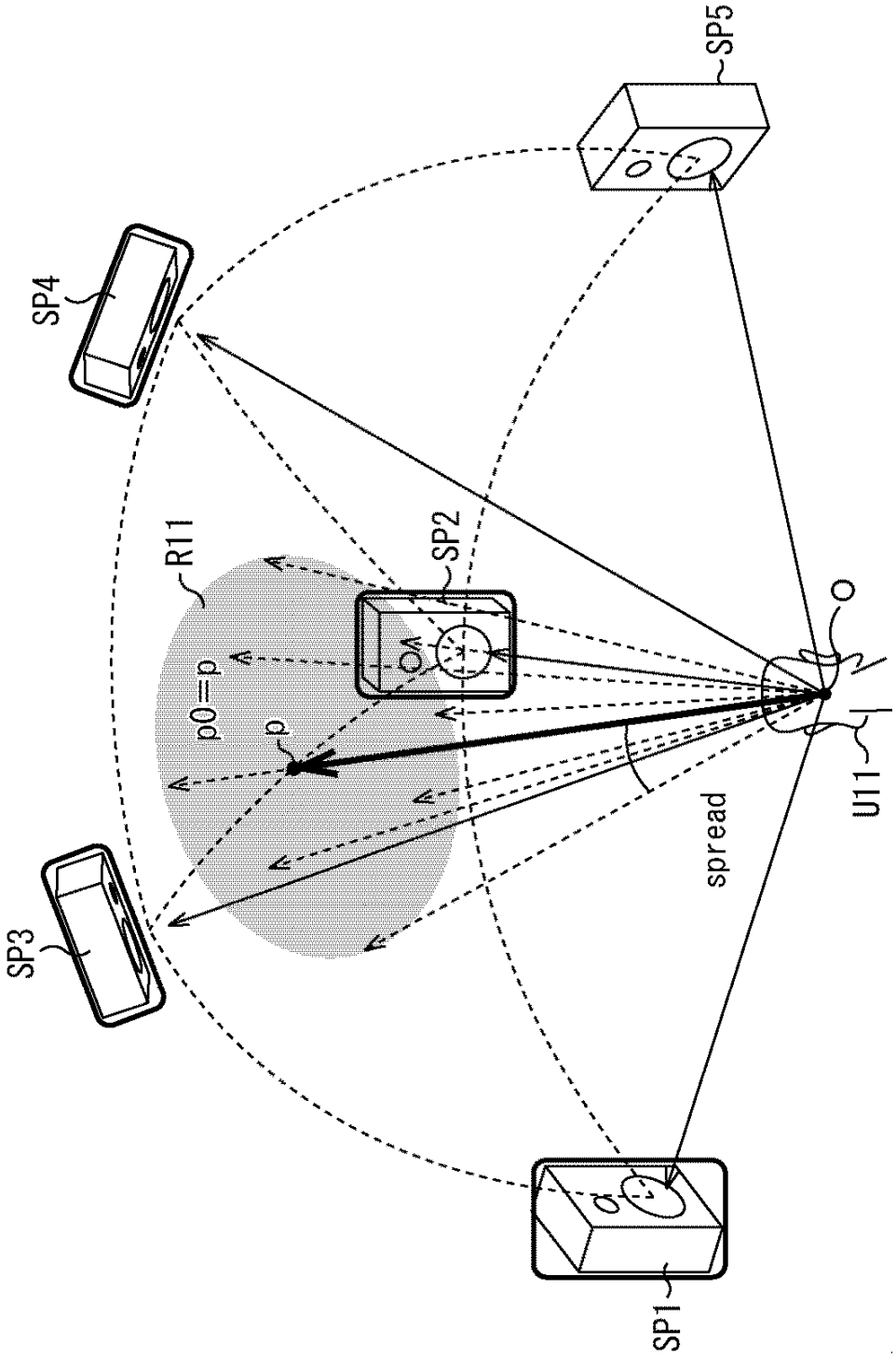

FIG. 4

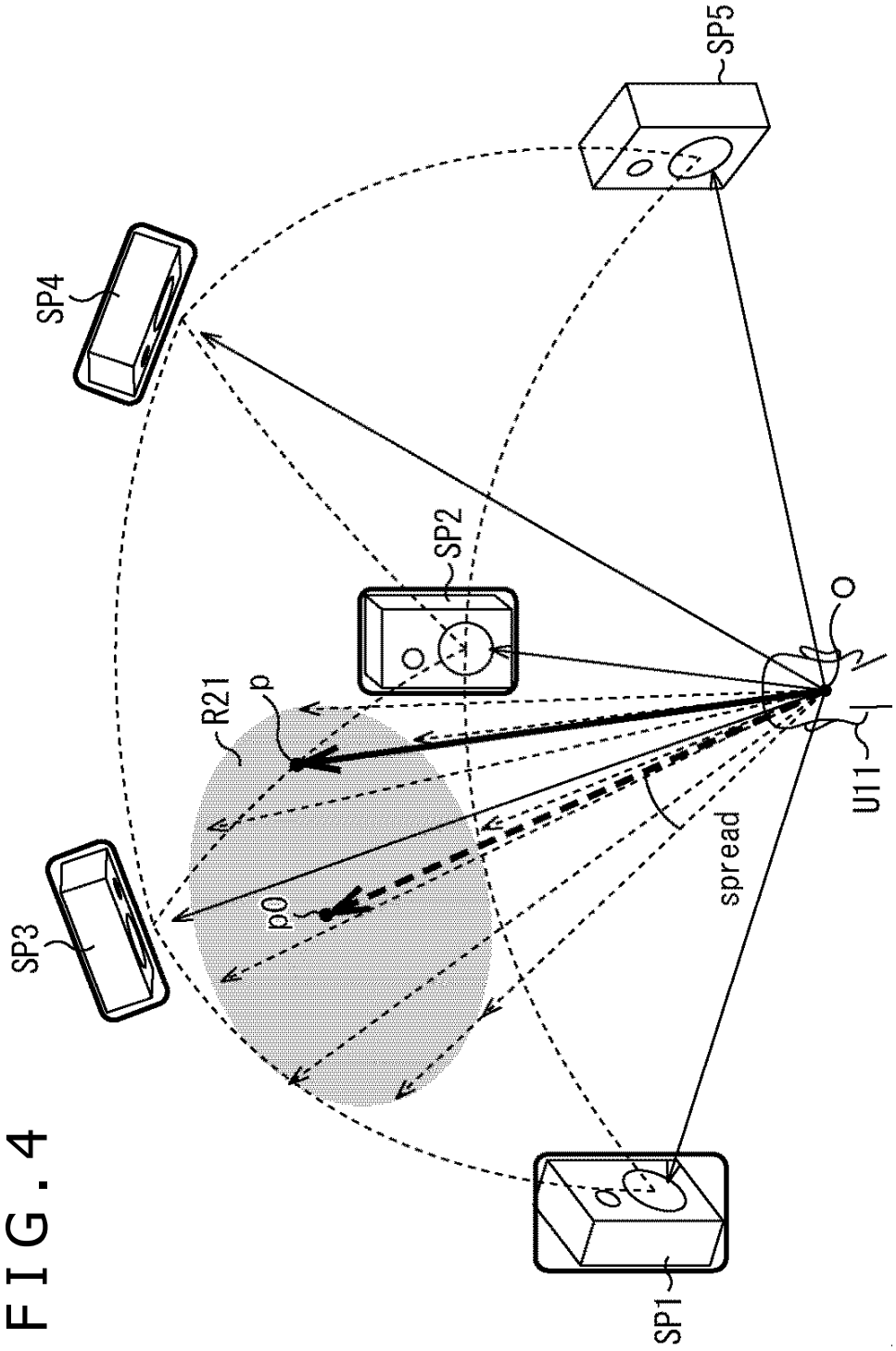

FIG. 5

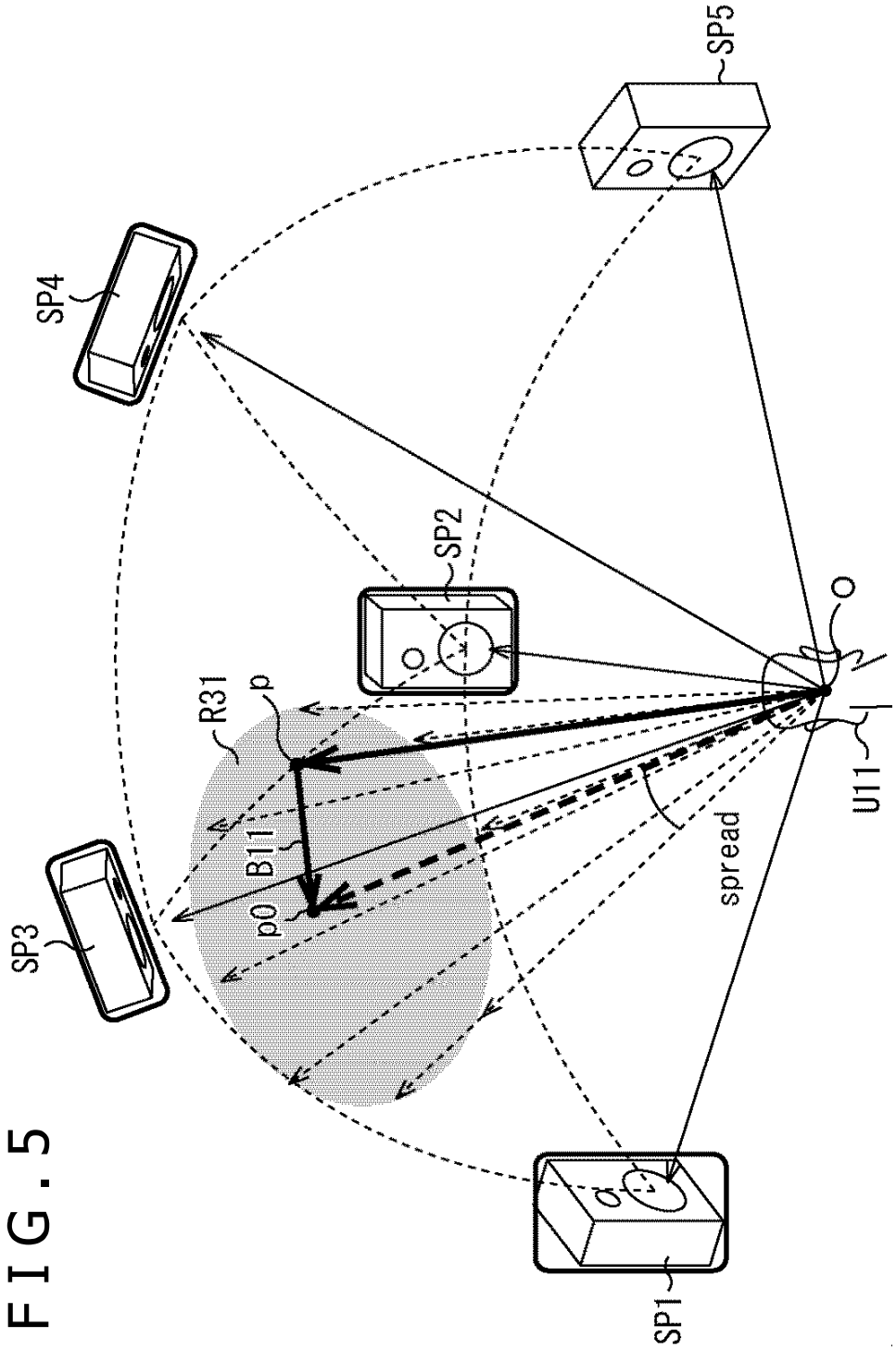

FIG. 6

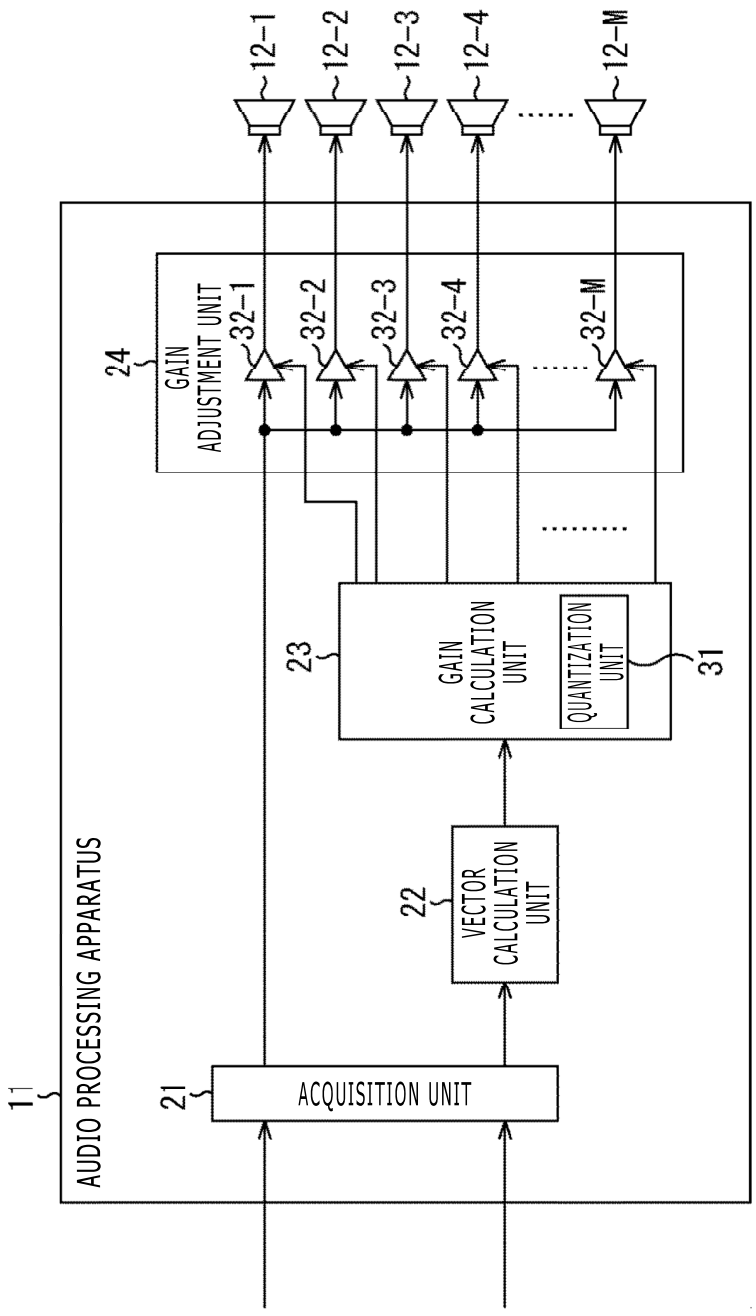
11
AUDIO PROCESSING APPARATUS
21
ACQUISITION UNIT
22
VECTOR CALCULATION UNIT
23
GAIN CALCULATION UNIT
QUANTIZATION UNIT
31
24
GAIN ADJUSTMENT UNIT
32-1
32-2
32-3
32-4
32-M
12-1
12-2
12-3
12-4
12-M

FIG. 7

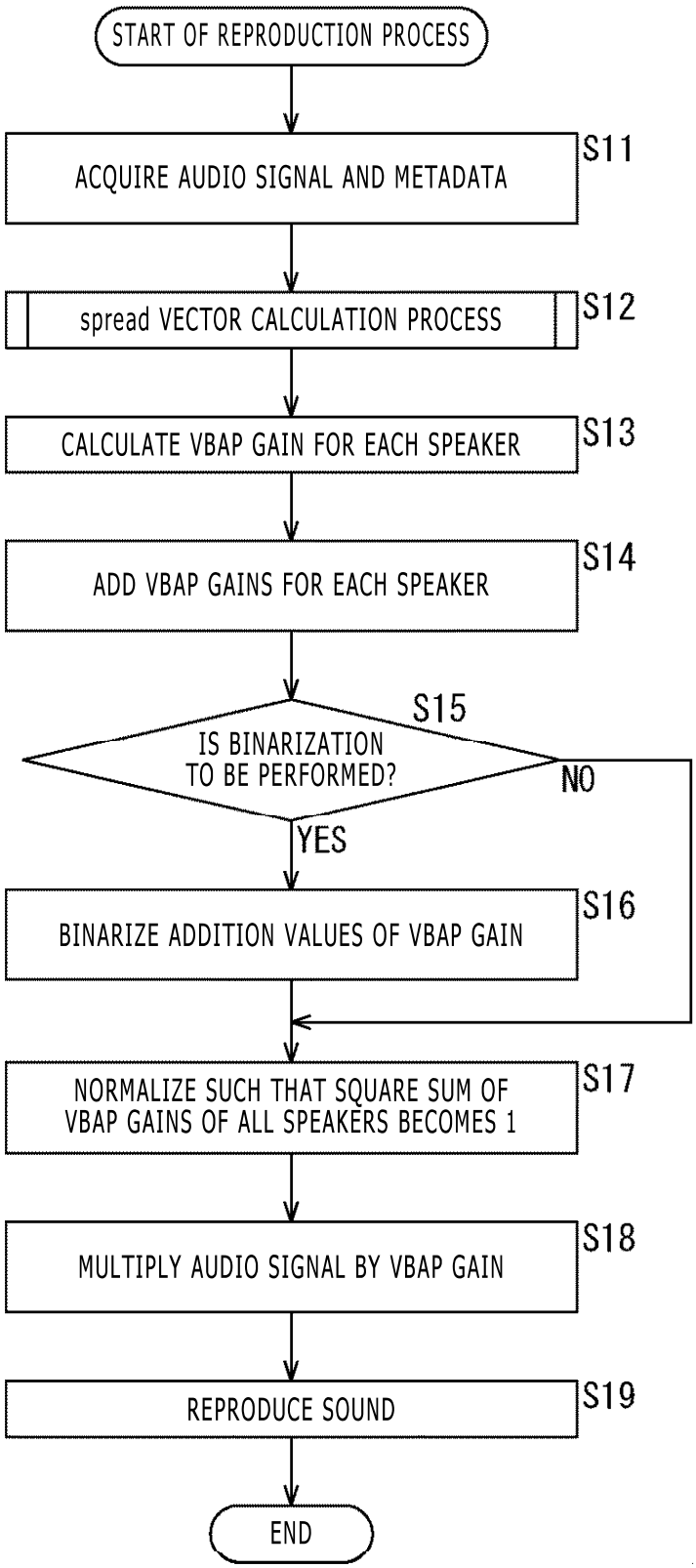
START OF REPRODUCTION PROCESS
ACQUIRE AUDIO SIGNAL AND METADATA
S11
spread VECTOR CALCULATION PROCESS
S12
CALCULATE VBAP GAIN FOR EACH SPEAKER
S13
ADD VBAP GAINS FOR EACH SPEAKER
S14
S15
IS BINARIZATION TO BE PERFORMED?
NO
YES
BINARIZE ADDITION VALUES OF VBAP GAIN
S16
NORMALIZE SUCH THAT SQUARE SUM OF VBAP GAINS OF ALL SPEAKERS BECOMES 1
S17
MULTIPLY AUDIO SIGNAL BY VBAP GAIN
S18
REPRODUCE SOUND
S19
END

FIG. 8

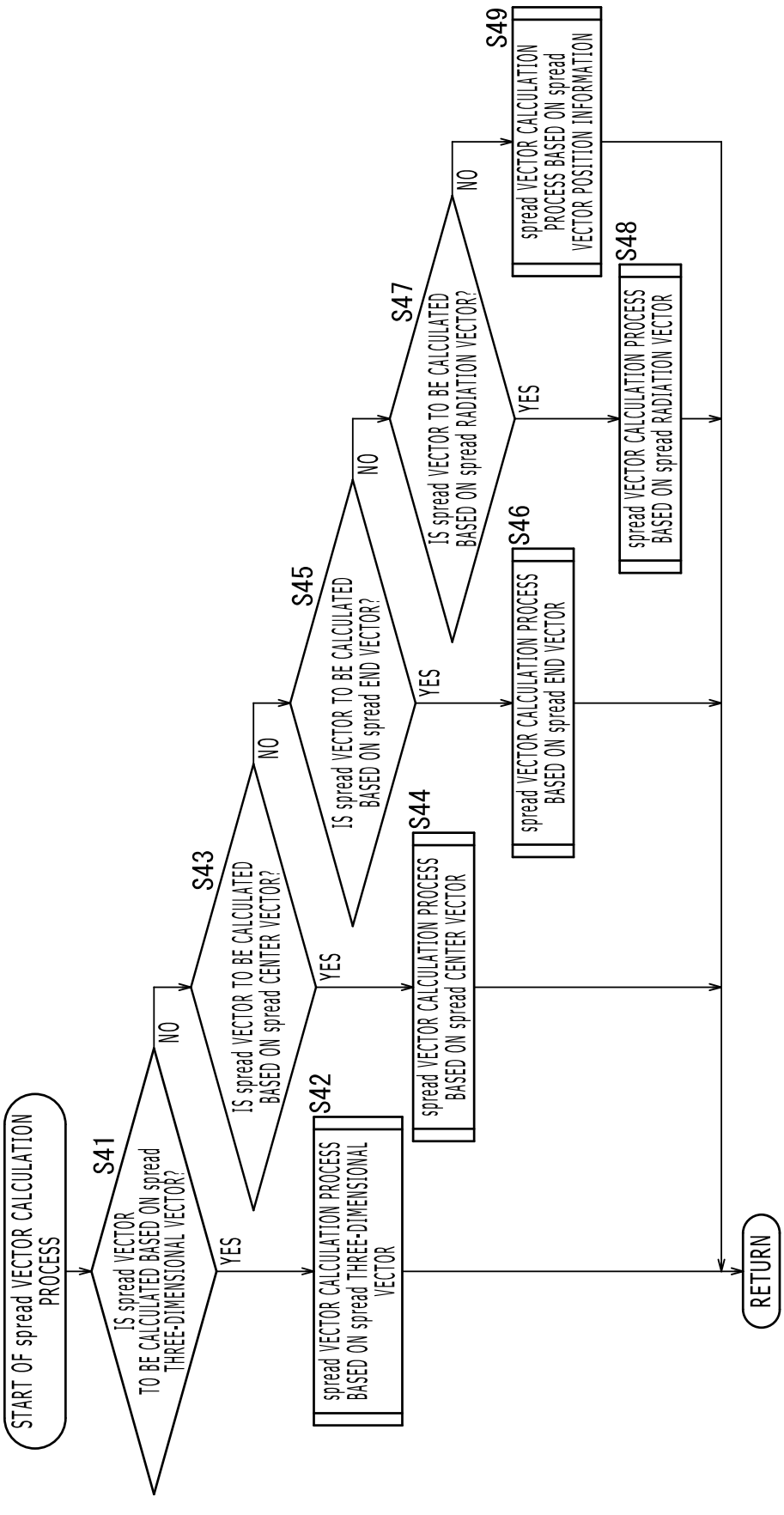
START OF spread VECTOR CALCULATION PROCESS
S41
IS spread VECTOR TO BE CALCULATED BASED ON spread THREE-DIMENSIONAL VECTOR?
YES
NO
S42
spread VECTOR CALCULATION PROCESS BASED ON spread THREE-DIMENSIONAL VECTOR
S43
IS spread VECTOR TO BE CALCULATED BASED ON spread CENTER VECTOR?
YES
NO
S44
spread VECTOR CALCULATION PROCESS BASED ON spread CENTER VECTOR
S45
IS spread VECTOR TO BE CALCULATED BASED ON spread END VECTOR?
YES
NO
S46
spread VECTOR CALCULATION PROCESS BASED ON spread END VECTOR
S47
IS spread VECTOR TO BE CALCULATED BASED ON spread RADIATION VECTOR?
YES
NO
S48
spread VECTOR CALCULATION PROCESS BASED ON spread RADIATION VECTOR
S49
spread VECTOR CALCULATION PROCESS BASED ON spread VECTOR POSITION INFORMATION
RETURN

FIG. 9

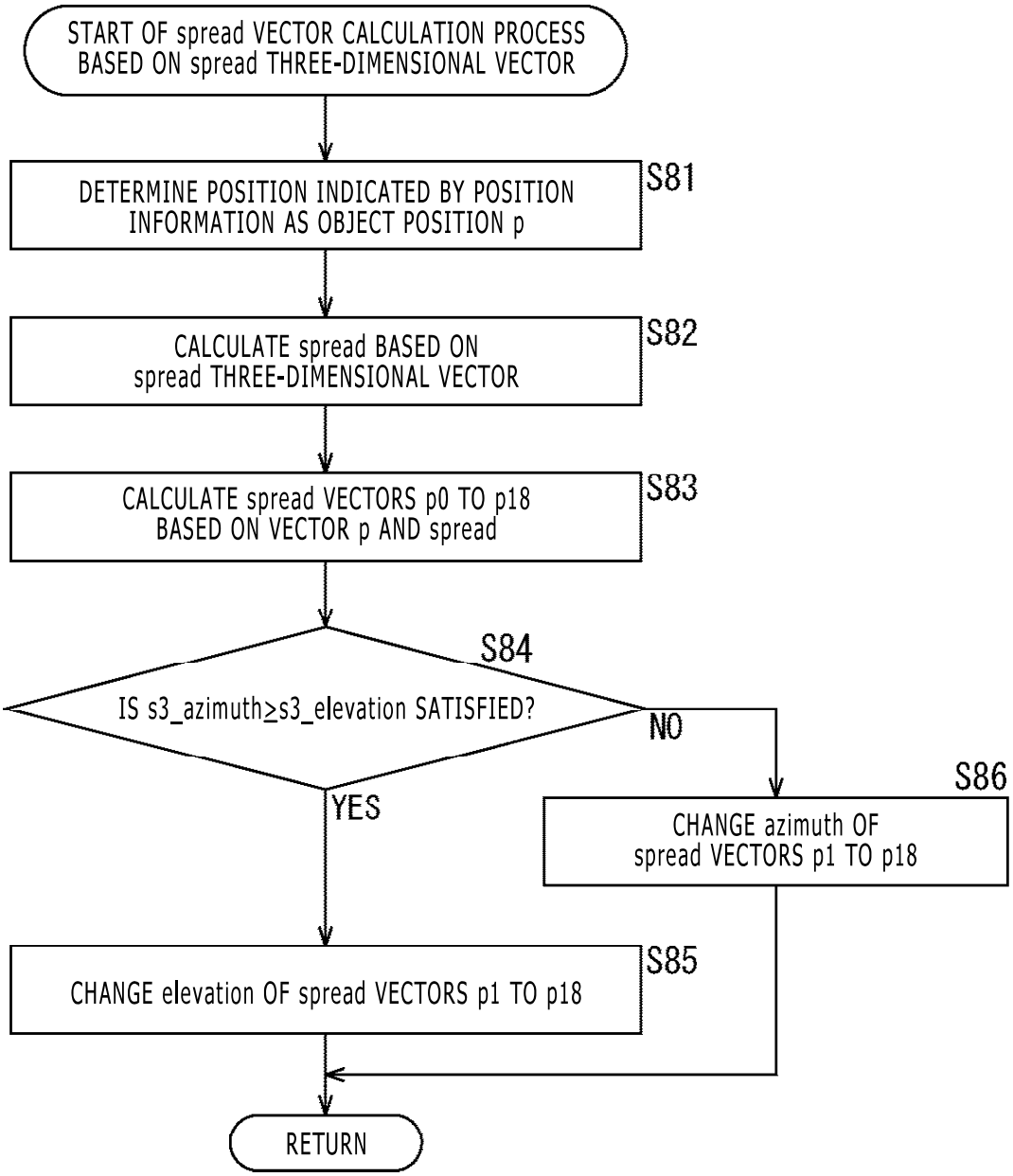
START OF spread VECTOR CALCULATION PROCESS BASED ON spread THREE-DIMENSIONAL VECTOR
DETERMINE POSITION INDICATED BY POSITION INFORMATION AS OBJECT POSITION p
S81
CALCULATE spread BASED ON spread THREE-DIMENSIONAL VECTOR
S82
CALCULATE spread VECTORS p0 TO p18 BASED ON VECTOR p AND spread
S83
S84
IS s3_azimuth≥s3_elevation SATISFIED?
NO
YES
S86
CHANGE azimuth OF spread VECTORS p1 TO p18
CHANGE elevation OF spread VECTORS p1 TO p18
S85
RETURN

FIG.10

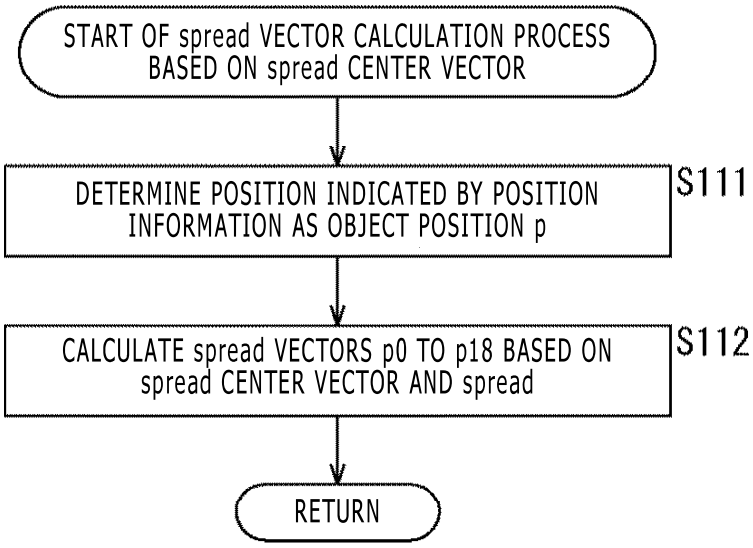
START OF spread VECTOR CALCULATION PROCESS BASED ON spread CENTER VECTOR
DETERMINE POSITION INDICATED BY POSITION INFORMATION AS OBJECT POSITION p
S111
CALCULATE spread VECTORS p0 TO p18 BASED ON spread CENTER VECTOR AND spread
S112
RETURN

FIG. 11

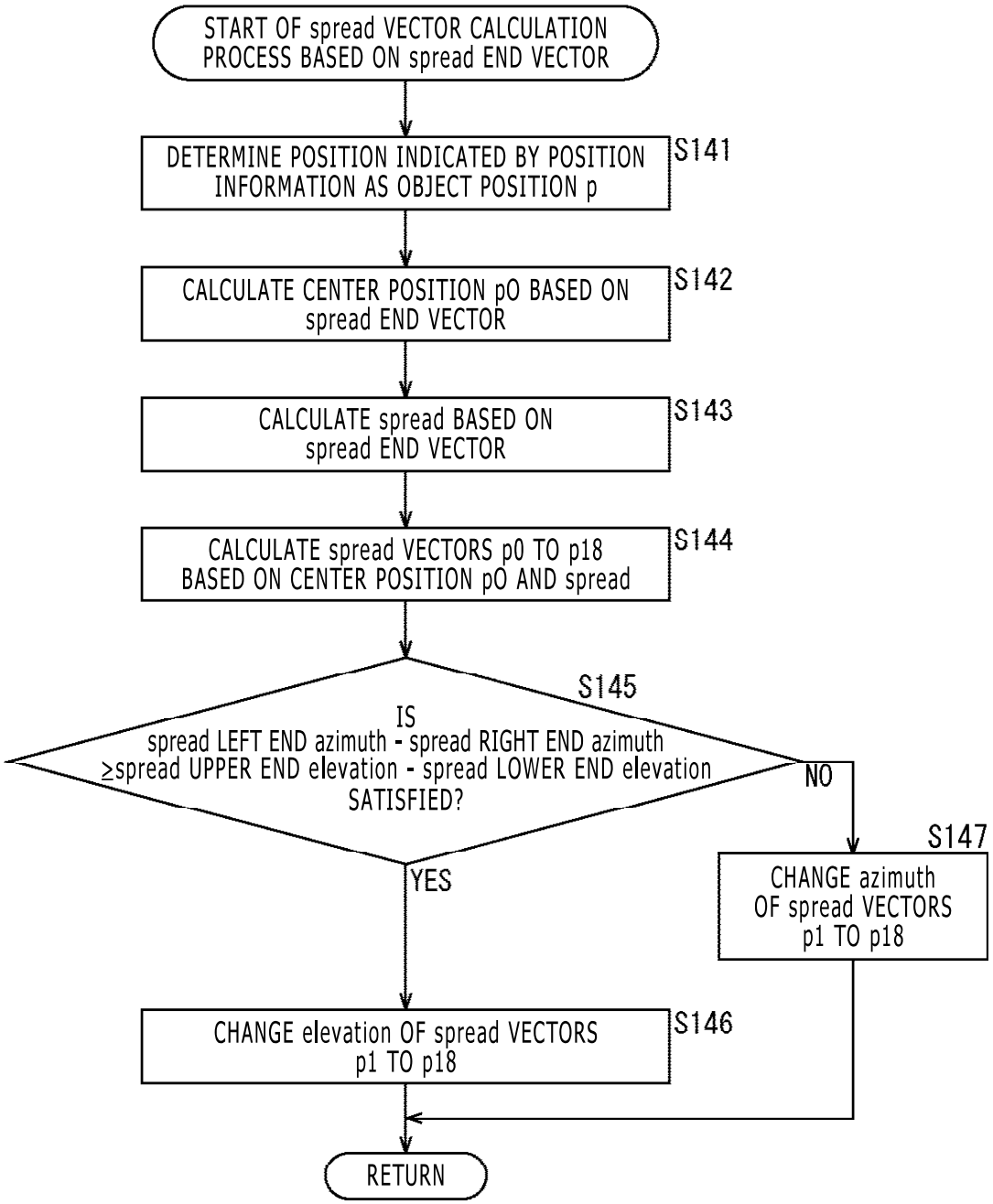
START OF spread VECTOR CALCULATION PROCESS BASED ON spread END VECTOR
DETERMINE POSITION INDICATED BY POSITION INFORMATION AS OBJECT POSITION p
S141
CALCULATE CENTER POSITION pO BASED ON spread END VECTOR
S142
CALCULATE spread BASED ON spread END VECTOR
S143
CALCULATE spread VECTORS p0 TO p18 BASED ON CENTER POSITION pO AND spread
S144
S145
IS spread LEFT END azimuth - spread RIGHT END azimuth ≥spread UPPER END elevation - spread LOWER END elevation SATISFIED?
NO
YES
S147
CHANGE azimuth OF spread VECTORS p1 TO p18
CHANGE elevation OF spread VECTORS p1 TO p18
S146
RETURN

FIG. 12

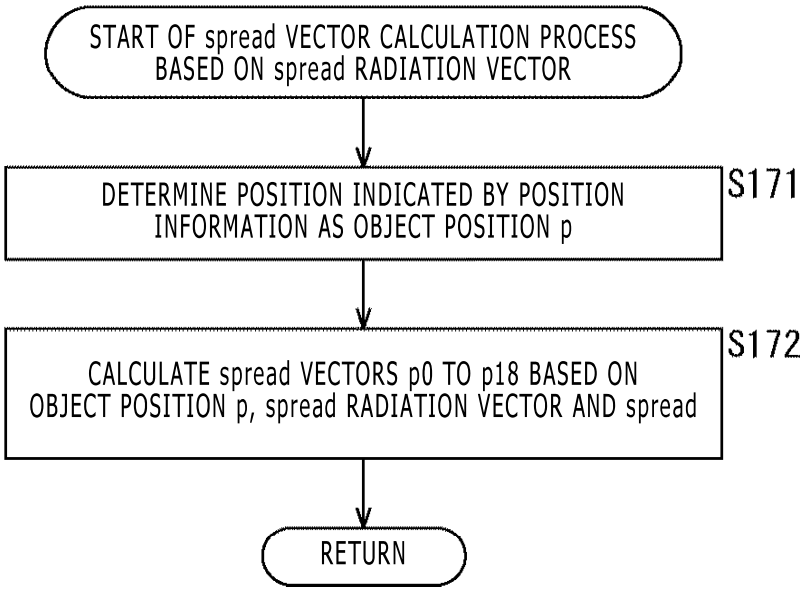
START OF spread VECTOR CALCULATION PROCESS BASED ON spread RADIATION VECTOR
DETERMINE POSITION INDICATED BY POSITION INFORMATION AS OBJECT POSITION p
S171
CALCULATE spread VECTORS p0 TO p18 BASED ON OBJECT POSITION p, spread RADIATION VECTOR AND spread
S172
RETURN

FIG. 13

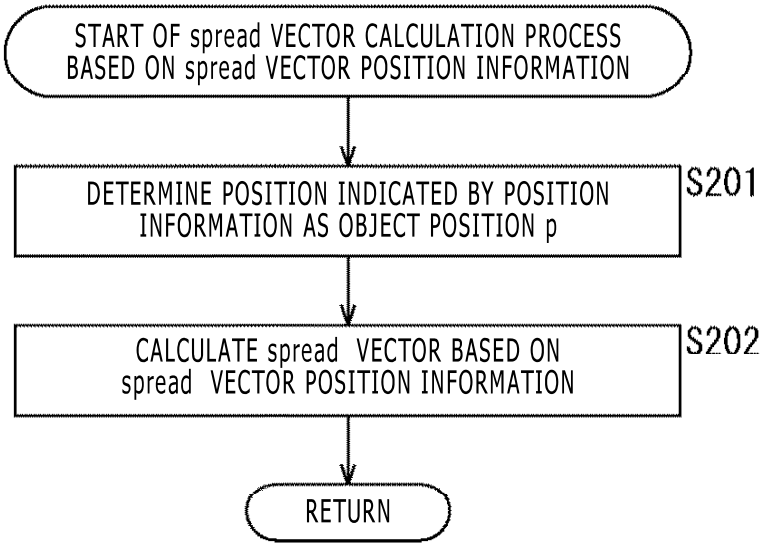
START OF spread VECTOR CALCULATION PROCESS BASED ON spread VECTOR POSITION INFORMATION
DETERMINE POSITION INDICATED BY POSITION INFORMATION AS OBJECT POSITION p
S201
CALCULATE spread VECTOR BASED ON spread VECTOR POSITION INFORMATION
S202
RETURN

FIG.14

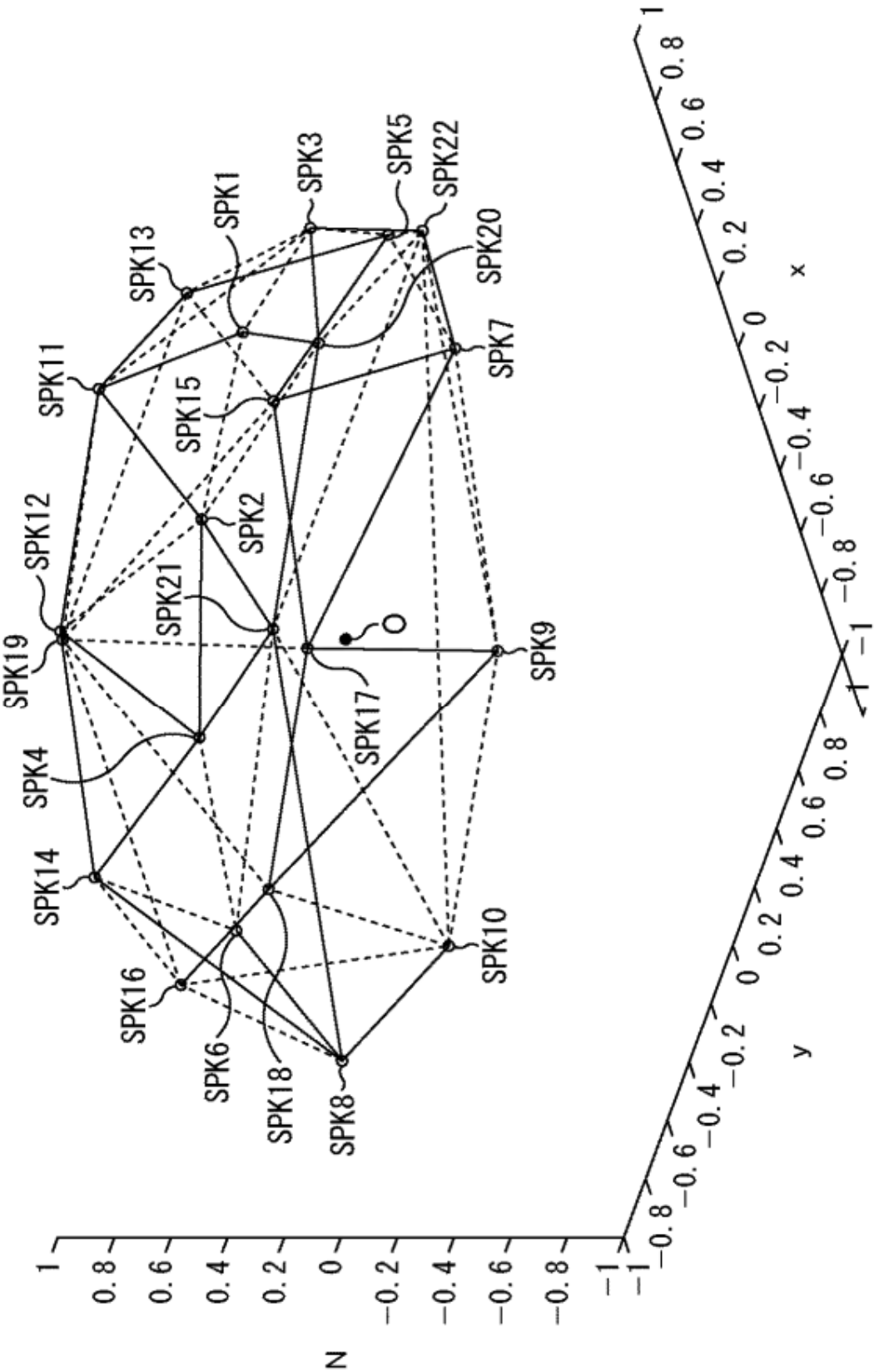
SPK1
SPK2
SPK3
SPK4
SPK5
SPK6
SPK7
SPK8
SPK9
SPK10
SPK11
SPK12
SPK13
SPK14
SPK15
SPK16
SPK17
SPK18
SPK19
SPK20
SPK21
SPK22
O
N
x
y

FIG.15

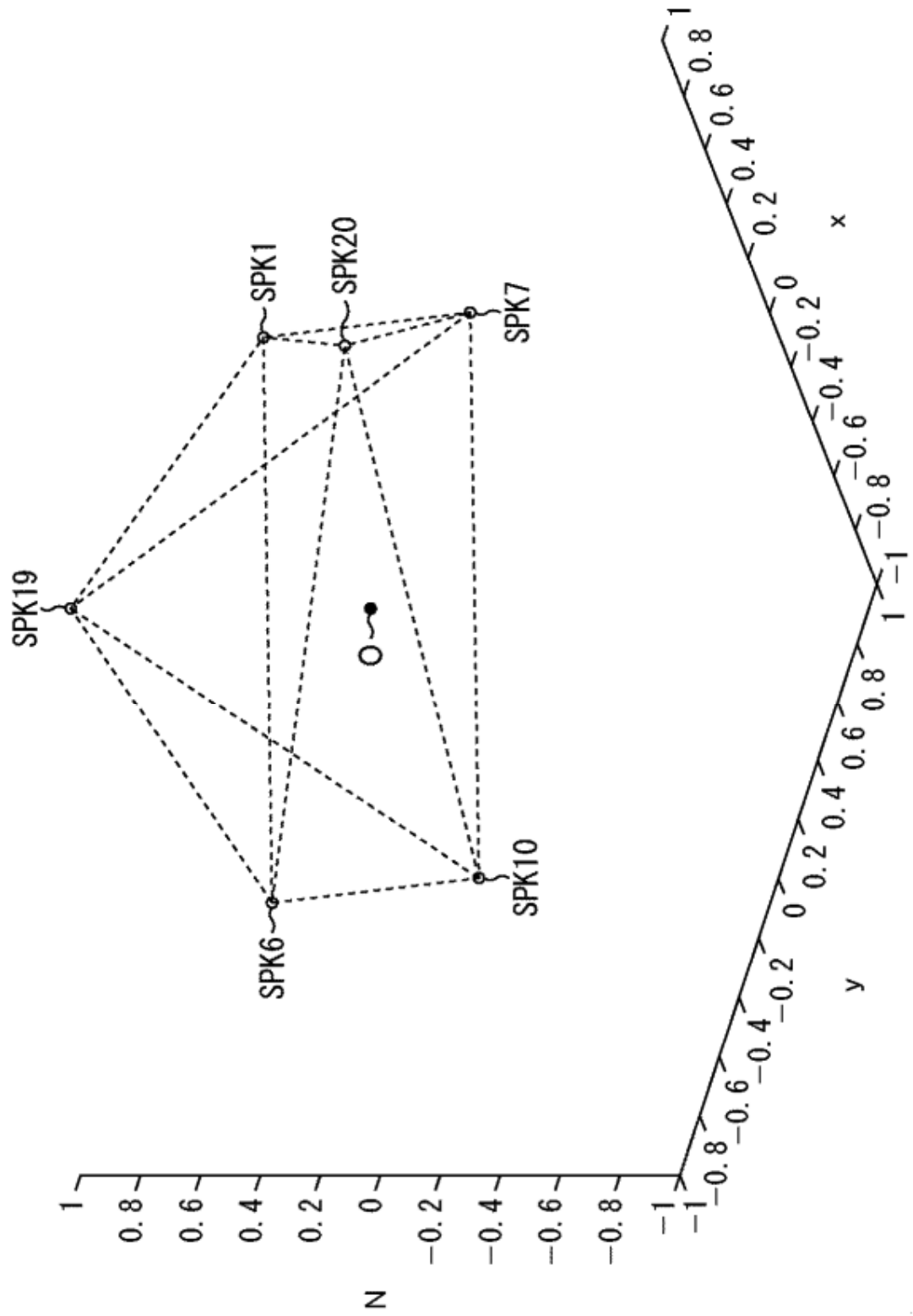
SPK19
SPK1
SPK20
SPK7
O
SPK6
SPK10
N
y
x
1
0.8
0.6
0.4
0.2
0
−0.2
−0.4
−0.6
−0.8
−1

FIG.16

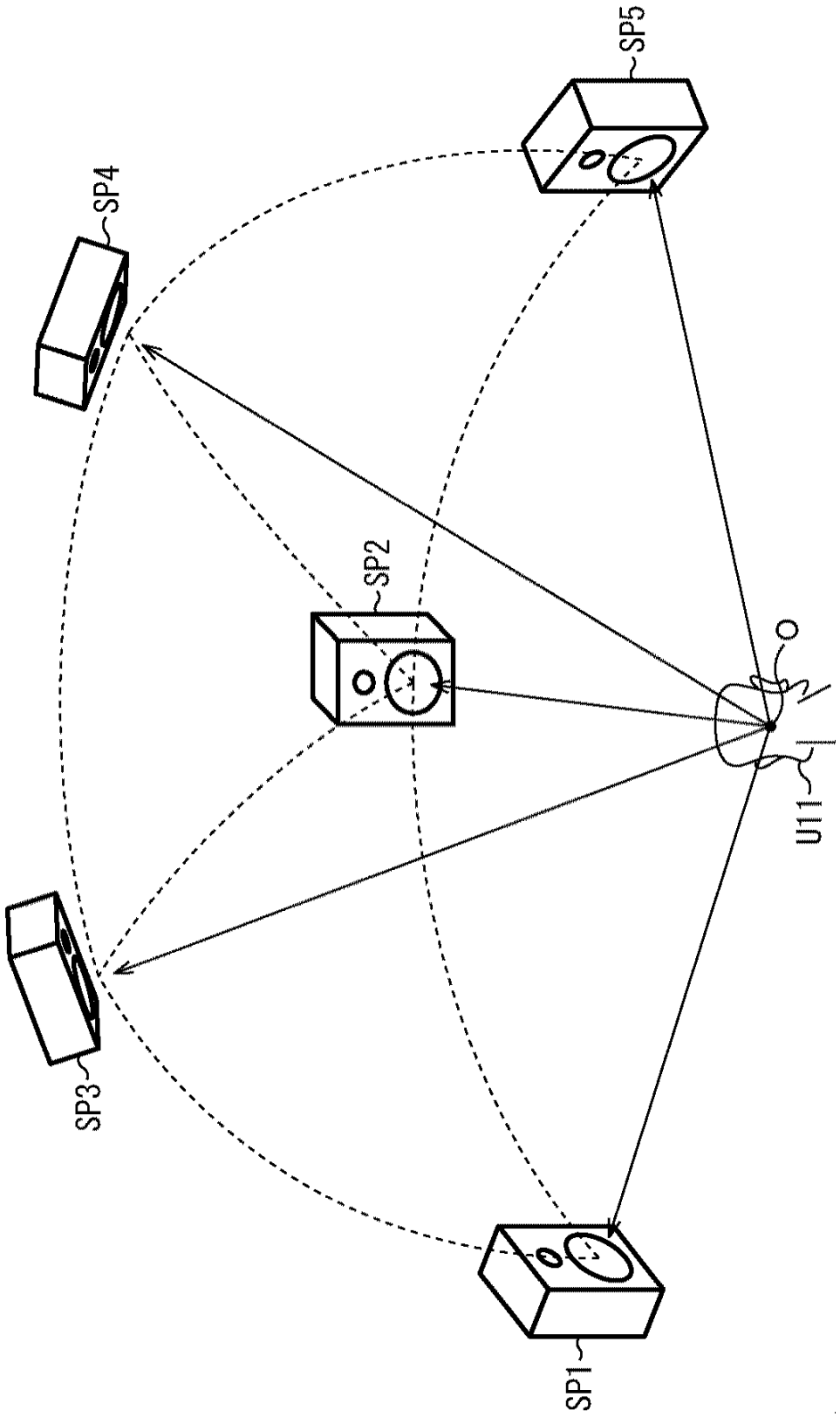

FIG. 17

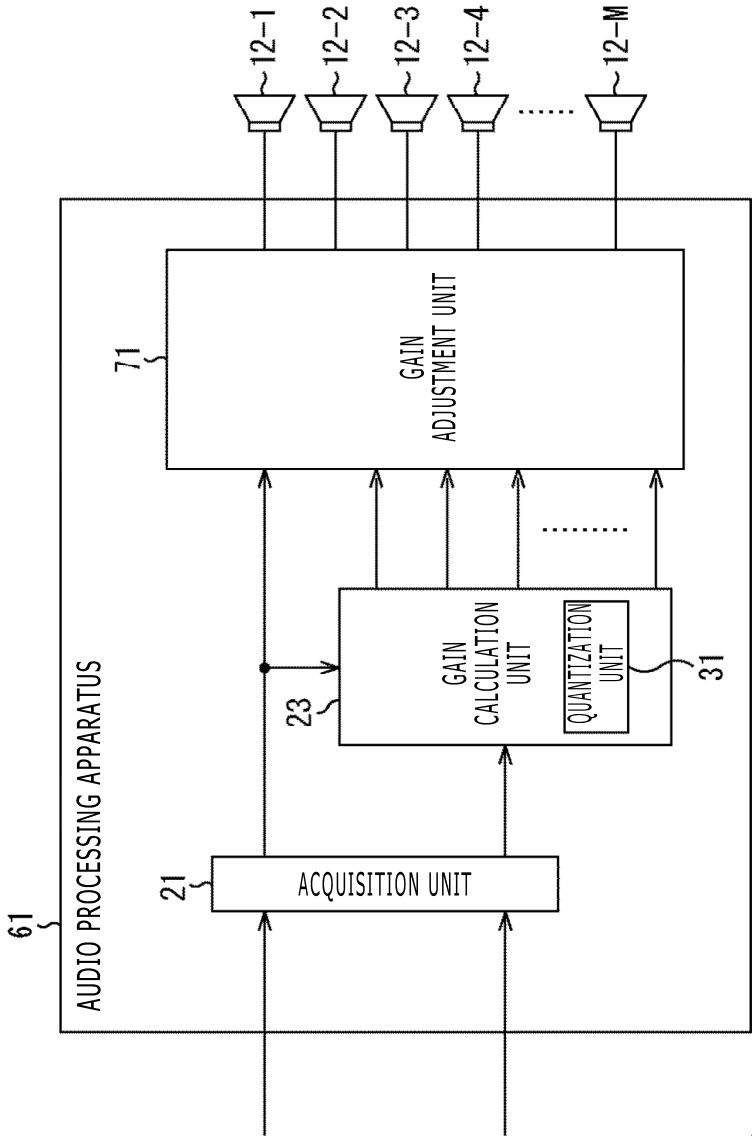
12-1
12-2
12-3
12-4
12-M
71
GAIN ADJUSTMENT UNIT
23
GAIN CALCULATION UNIT
QUANTIZATION UNIT
31
21
ACQUISITION UNIT
61
AUDIO PROCESSING APPARATUS

FIG.18

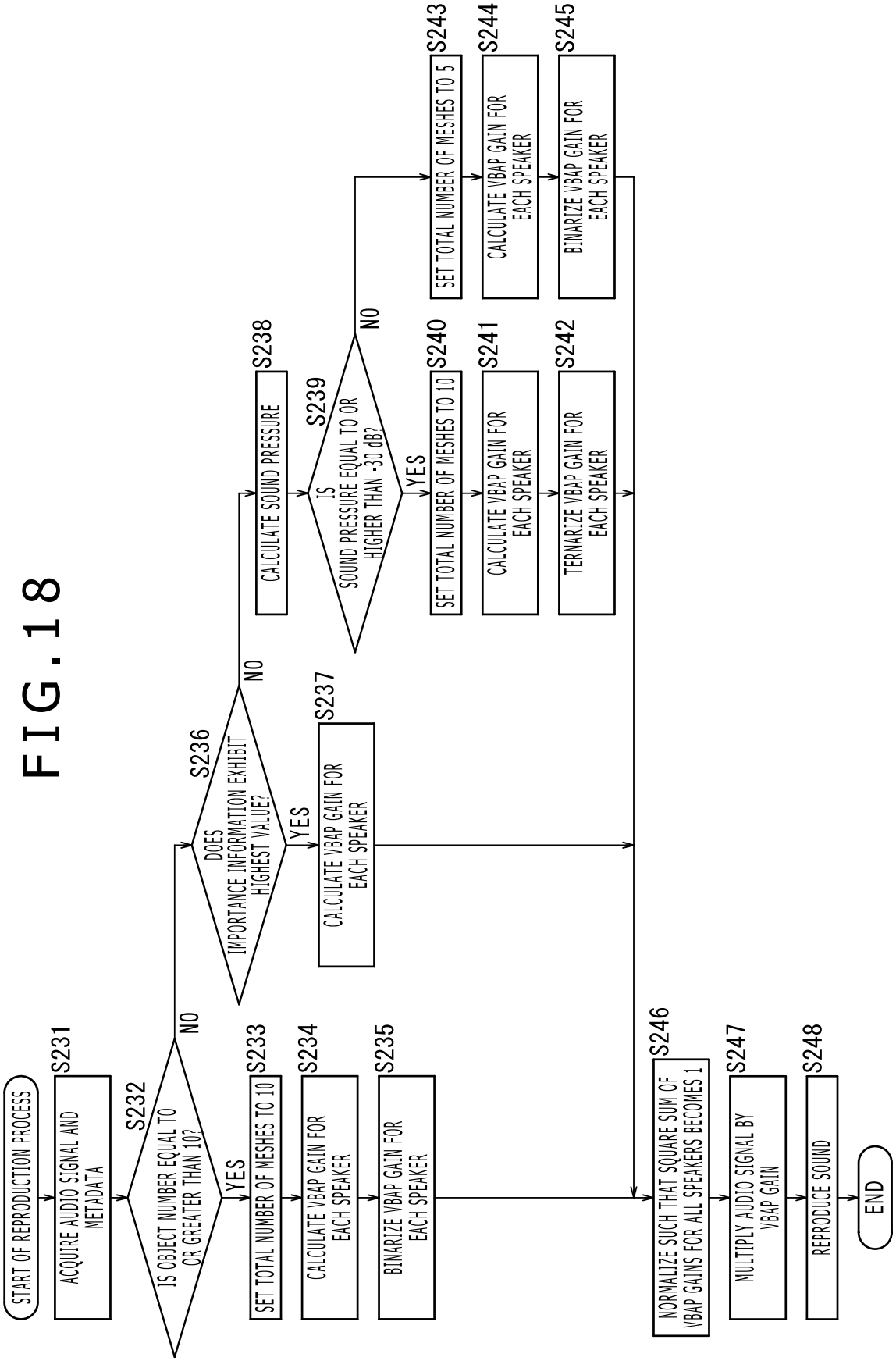
START OF REPRODUCTION PROCESS
S231
ACQUIRE AUDIO SIGNAL AND METADATA
S232
IS OBJECT NUMBER EQUAL TO OR GREATER THAN 10?
YES
NO
S233
SET TOTAL NUMBER OF MESHES TO 10
S234
CALCULATE VBAP GAIN FOR EACH SPEAKER
S235
BINARIZE VBAP GAIN FOR EACH SPEAKER
S236
DOES IMPORTANCE INFORMATION EXHIBIT HIGHEST VALUE?
YES
NO
S237
CALCULATE VBAP GAIN FOR EACH SPEAKER
S238
CALCULATE SOUND PRESSURE
S239
IS SOUND PRESSURE EQUAL TO OR HIGHER THAN -30 dB?
YES
NO
S240
SET TOTAL NUMBER OF MESHES TO 10
S241
CALCULATE VBAP GAIN FOR EACH SPEAKER
S242
TERNARIZE VBAP GAIN FOR EACH SPEAKER
S243
SET TOTAL NUMBER OF MESHES TO 5
S244
CALCULATE VBAP GAIN FOR EACH SPEAKER
S245
BINARIZE VBAP GAIN FOR EACH SPEAKER
S246
NORMALIZE SUCH THAT SQUARE SUM OF VBAP GAINS FOR ALL SPEAKERS BECOMES 1
S247
MULTIPLY AUDIO SIGNAL BY VBAP GAIN
S248
REPRODUCE SOUND
END

FIG.19

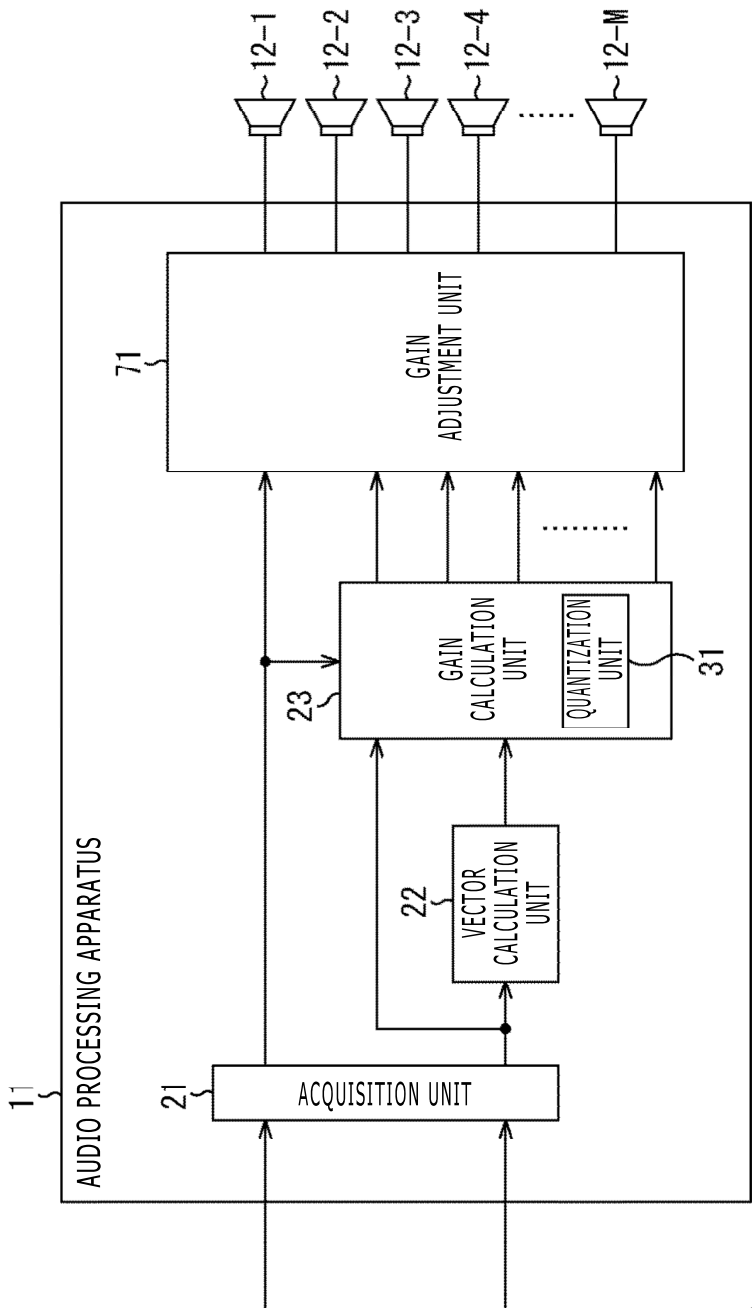
12-1
12-2
12-3
12-4
12-M
71
GAIN ADJUSTMENT UNIT
23
GAIN CALCULATION UNIT
QUANTIZATION UNIT
31
22
VECTOR CALCULATION UNIT
21
ACQUISITION UNIT
11
AUDIO PROCESSING APPARATUS

FIG.20

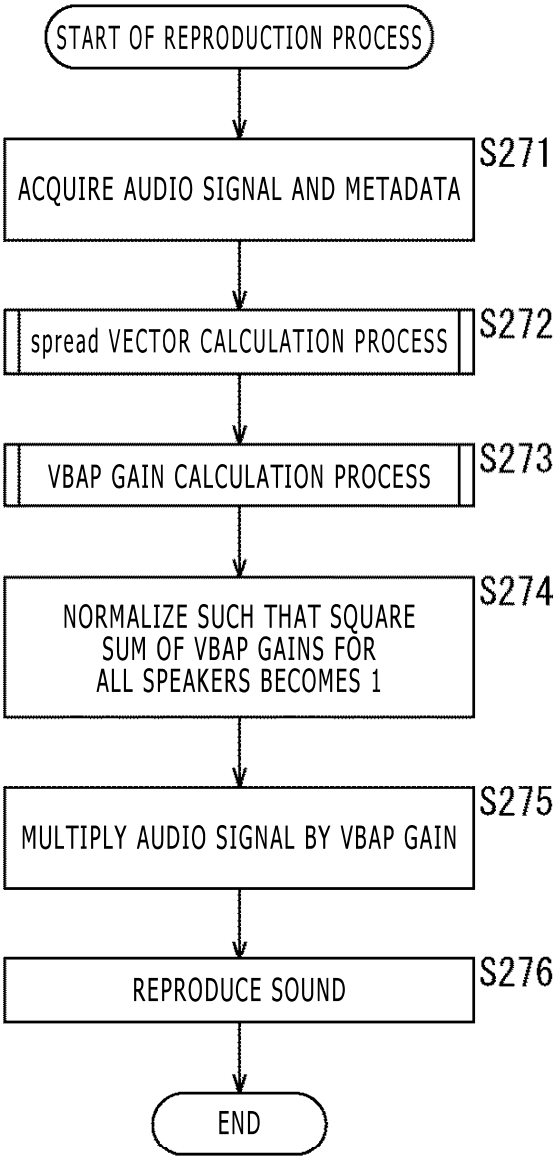
START OF REPRODUCTION PROCESS
ACQUIRE AUDIO SIGNAL AND METADATA
S271
spread VECTOR CALCULATION PROCESS
S272
VBAP GAIN CALCULATION PROCESS
S273
NORMALIZE SUCH THAT SQUARE SUM OF VBAP GAINS FOR ALL SPEAKERS BECOMES 1
S274
MULTIPLY AUDIO SIGNAL BY VBAP GAIN
S275
REPRODUCE SOUND
S276
END

FIG.21

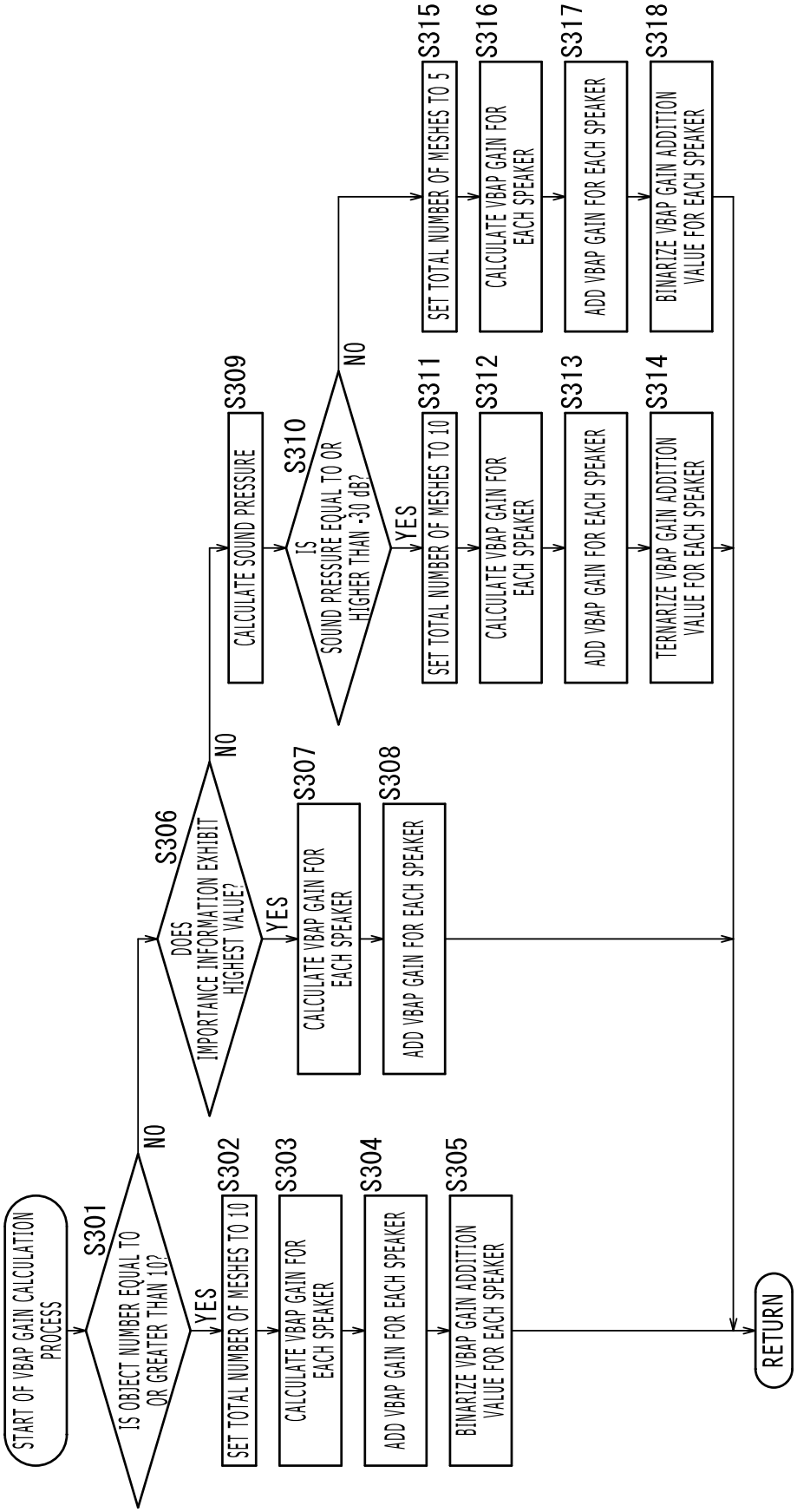
START OF VBAP GAIN CALCULATION PROCESS
S301
IS OBJECT NUMBER EQUAL TO OR GREATER THAN 10?
YES
NO
S302
SET TOTAL NUMBER OF MESHES TO 10
S303
CALCULATE VBAP GAIN FOR EACH SPEAKER
S304
ADD VBAP GAIN FOR EACH SPEAKER
S305
BINARIZE VBAP GAIN ADDITION VALUE FOR EACH SPEAKER
S306
DOES IMPORTANCE INFORMATION EXHIBIT HIGHEST VALUE?
YES
NO
S307
CALCULATE VBAP GAIN FOR EACH SPEAKER
S308
ADD VBAP GAIN FOR EACH SPEAKER
S309
CALCULATE SOUND PRESSURE
S310
IS SOUND PRESSURE EQUAL TO OR HIGHER THAN -30 dB?
YES
NO
S311
SET TOTAL NUMBER OF MESHES TO 10
S312
CALCULATE VBAP GAIN FOR EACH SPEAKER
S313
ADD VBAP GAIN FOR EACH SPEAKER
S314
TERNARIZE VBAP GAIN ADDITION VALUE FOR EACH SPEAKER
S315
SET TOTAL NUMBER OF MESHES TO 5
S316
CALCULATE VBAP GAIN FOR EACH SPEAKER
S317
ADD VBAP GAIN FOR EACH SPEAKER
S318
BINARIZE VBAP GAIN ADDITION VALUE FOR EACH SPEAKER
RETURN

FIG.22

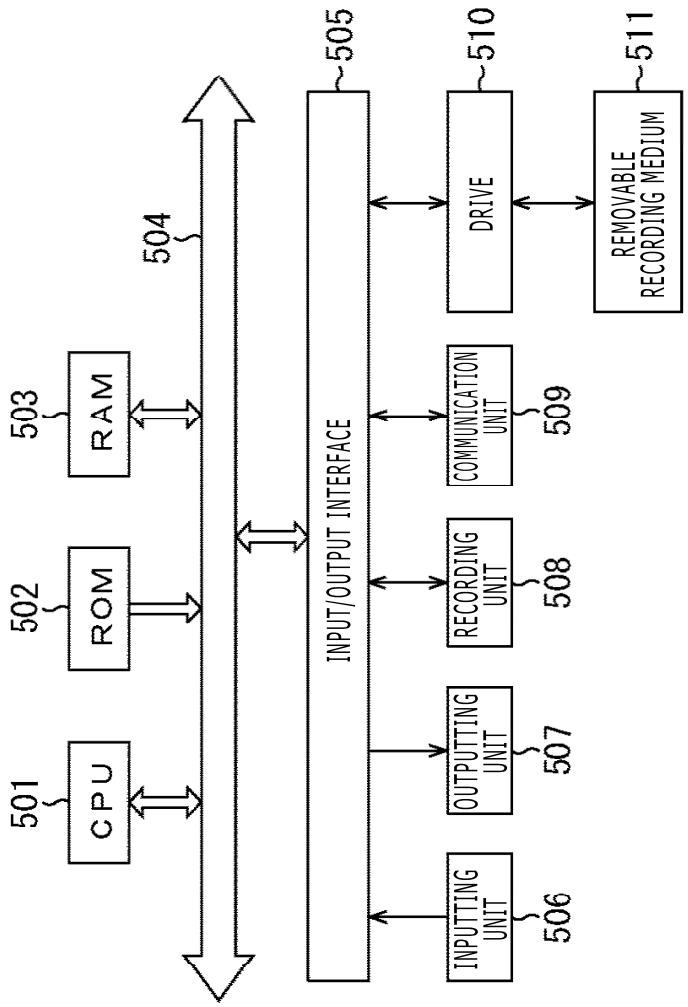
501
CPU
502
ROM
503
RAM
504
505
INPUT/OUTPUT INTERFACE
506
INPUTTING UNIT
507
OUTPUTTING UNIT
508
RECORDING UNIT
509
COMMUNICATION UNIT
510
DRIVE
511
REMOVABLE RECORDING MEDIUM