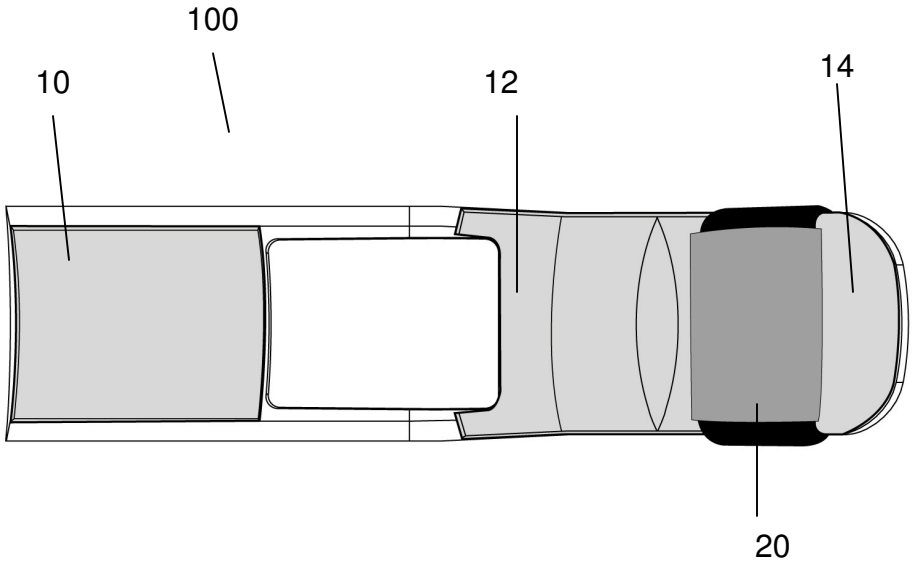

Figure 1A

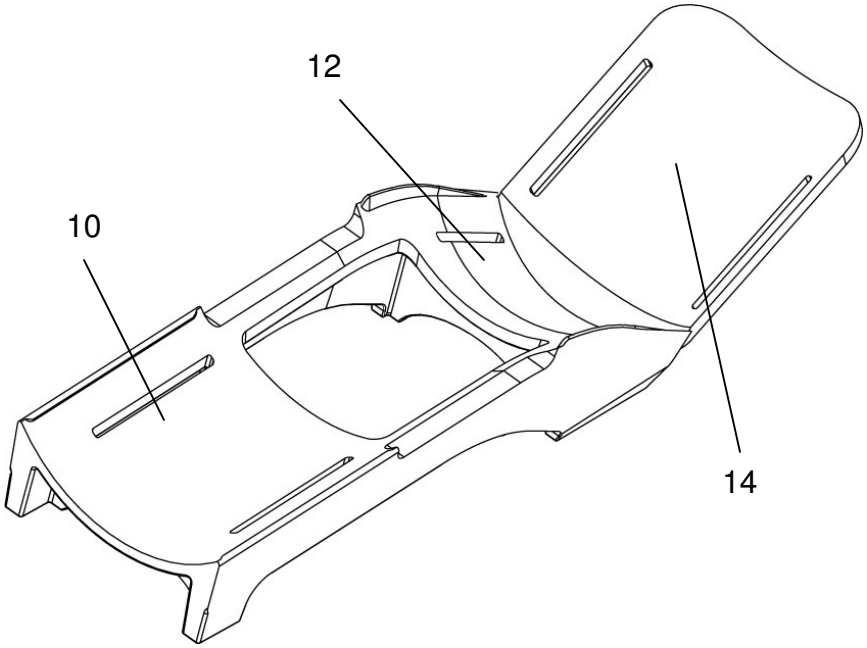

Figure 1B

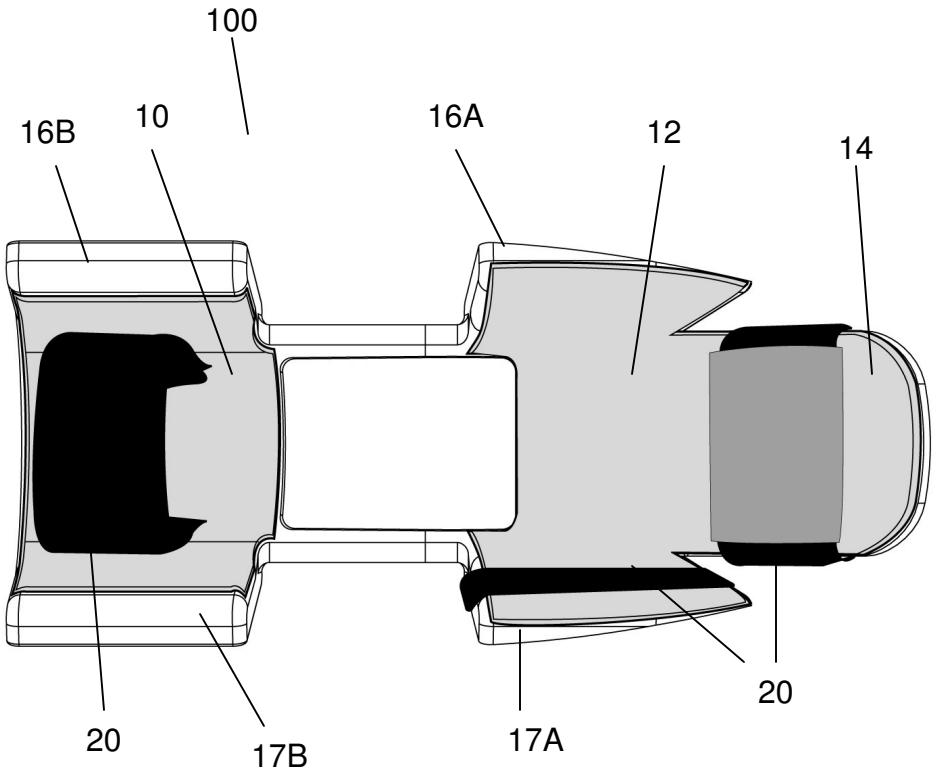

Figure 2A

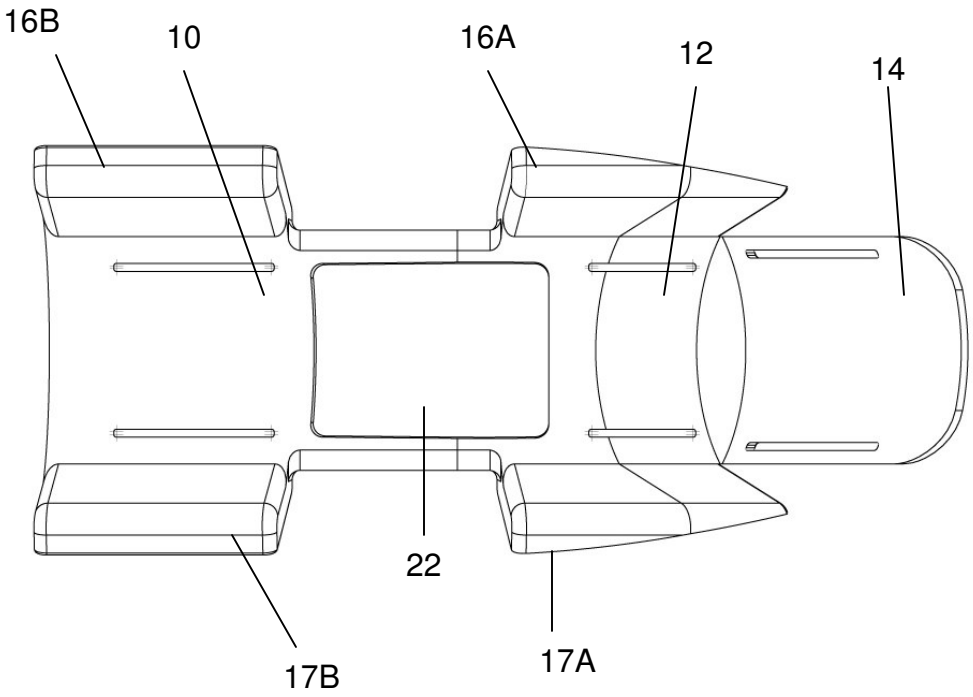

Figure 2B

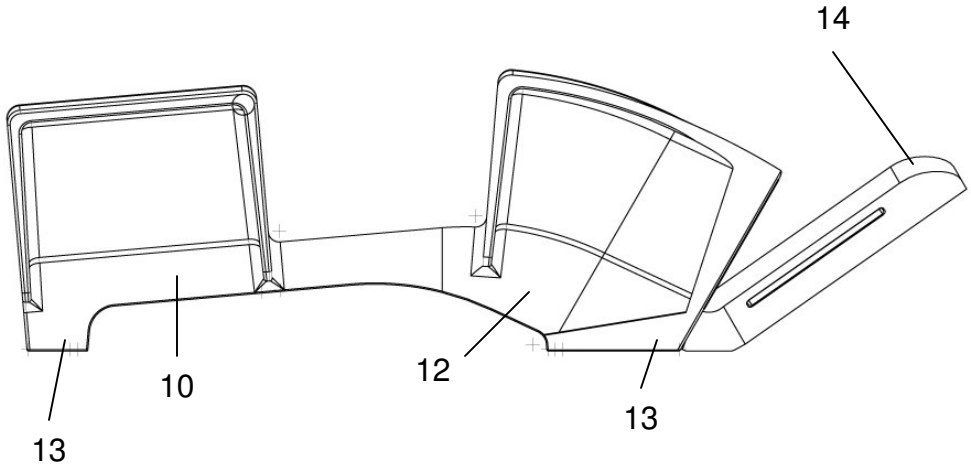

Figure 2C

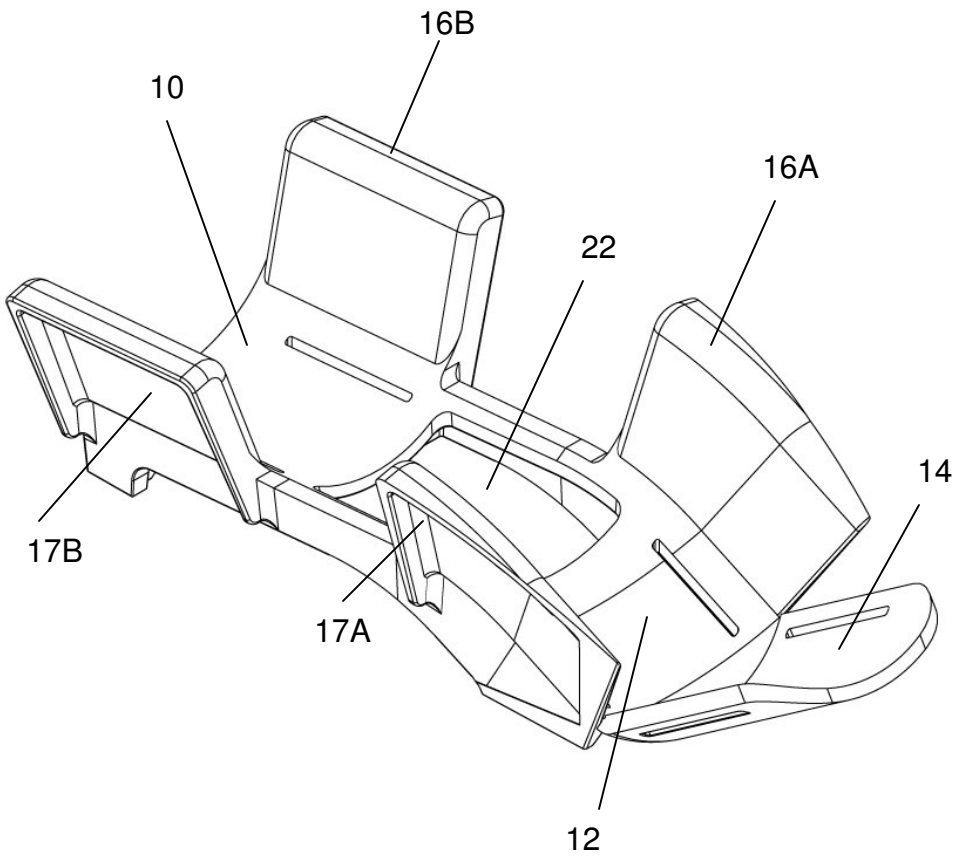

Figure 2D

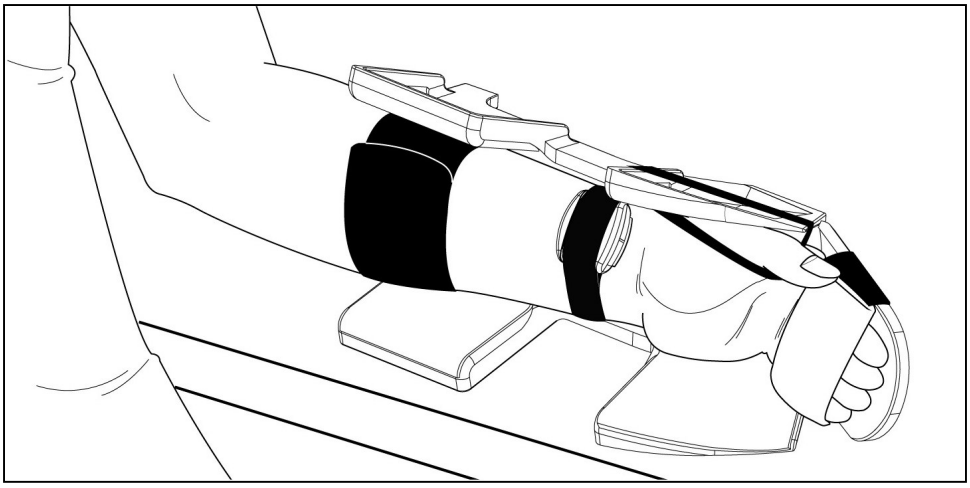

Figure 3A

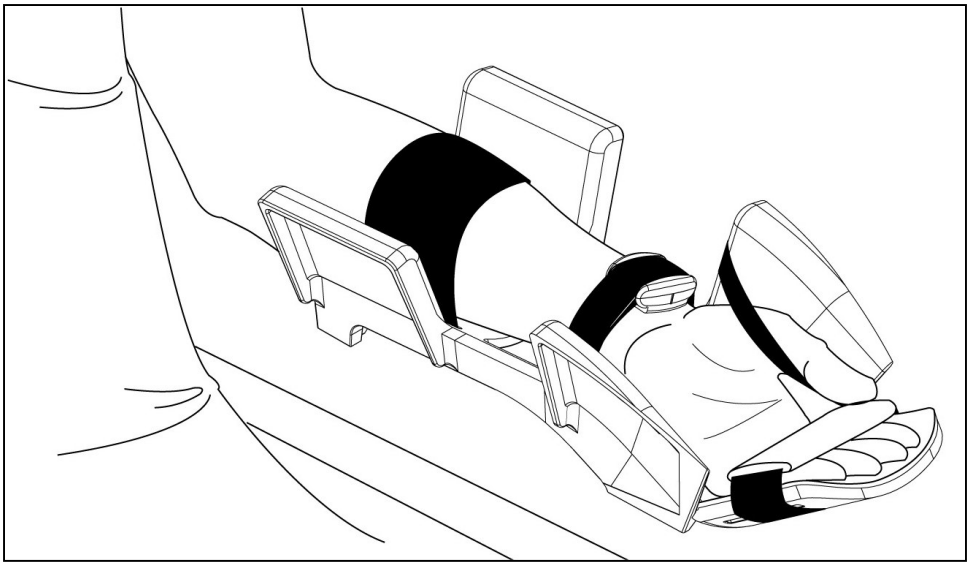

Figure 3B

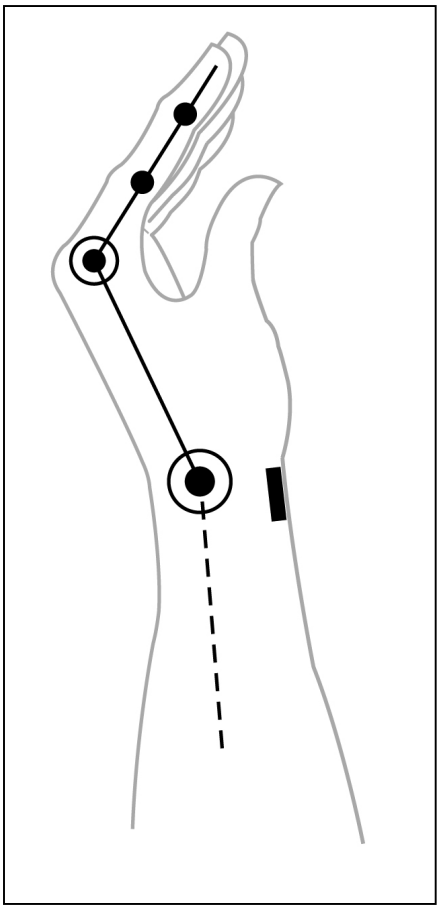

Figure 4A

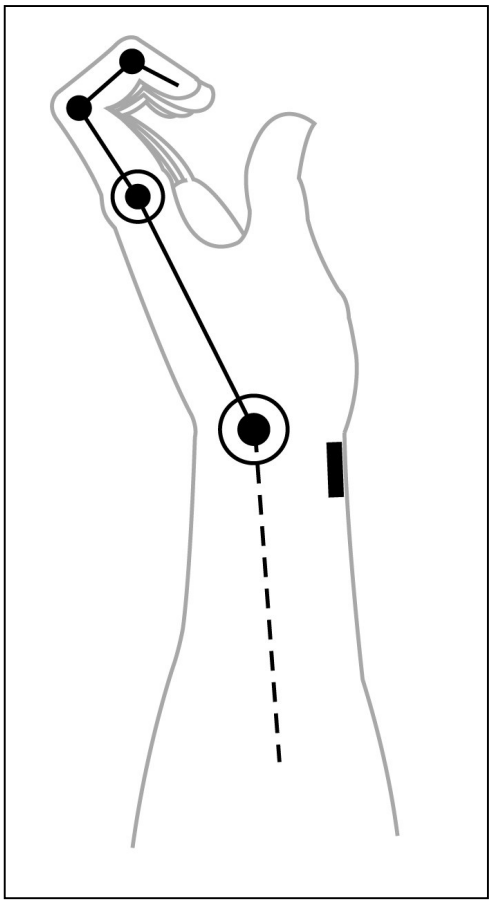

Figure 4B

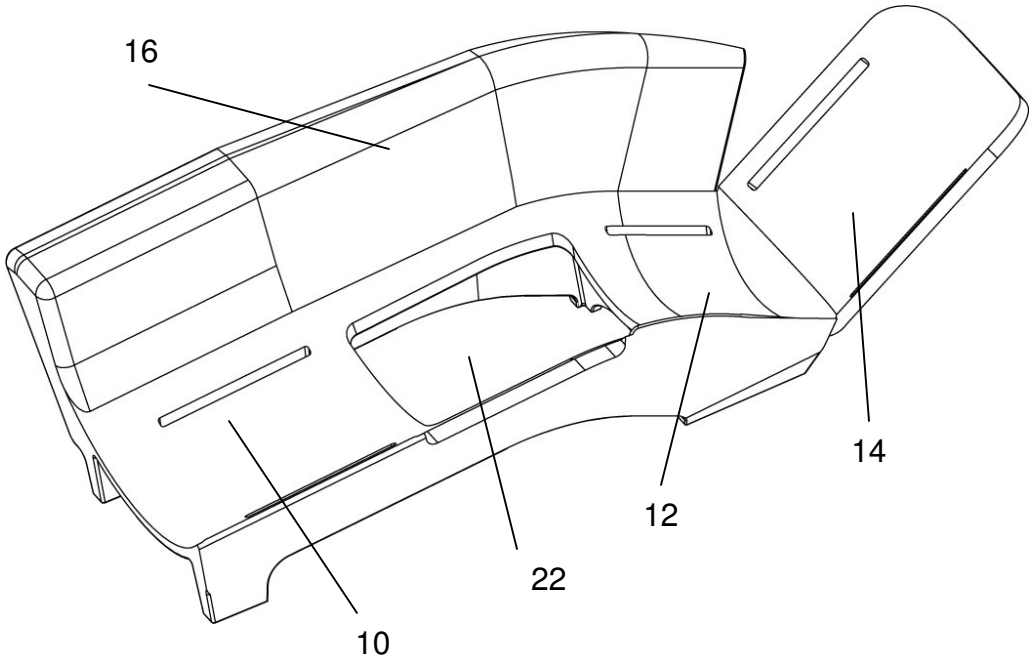

Figure 5

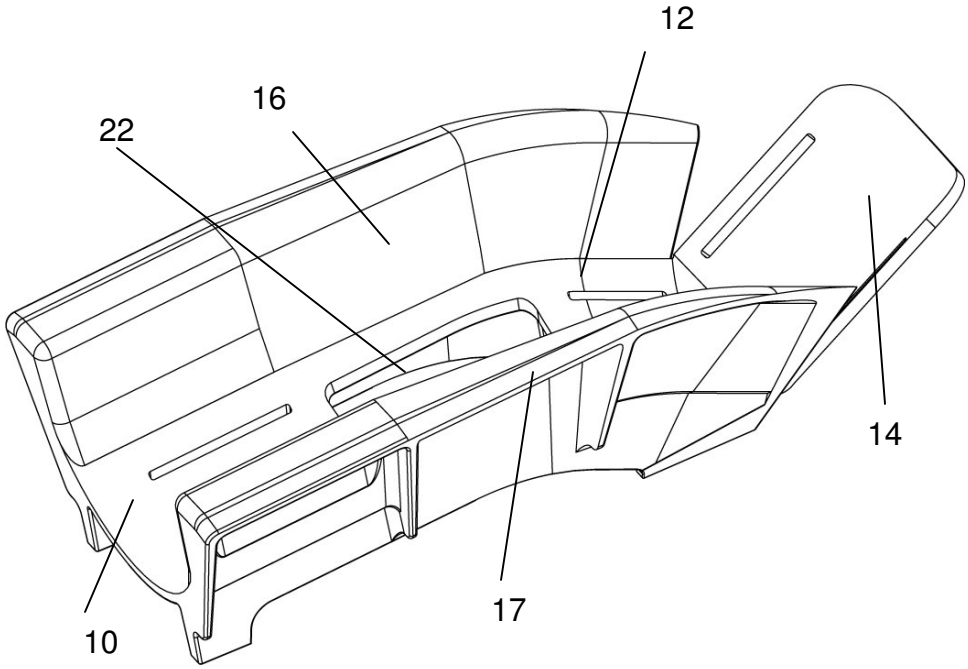

Figure 6

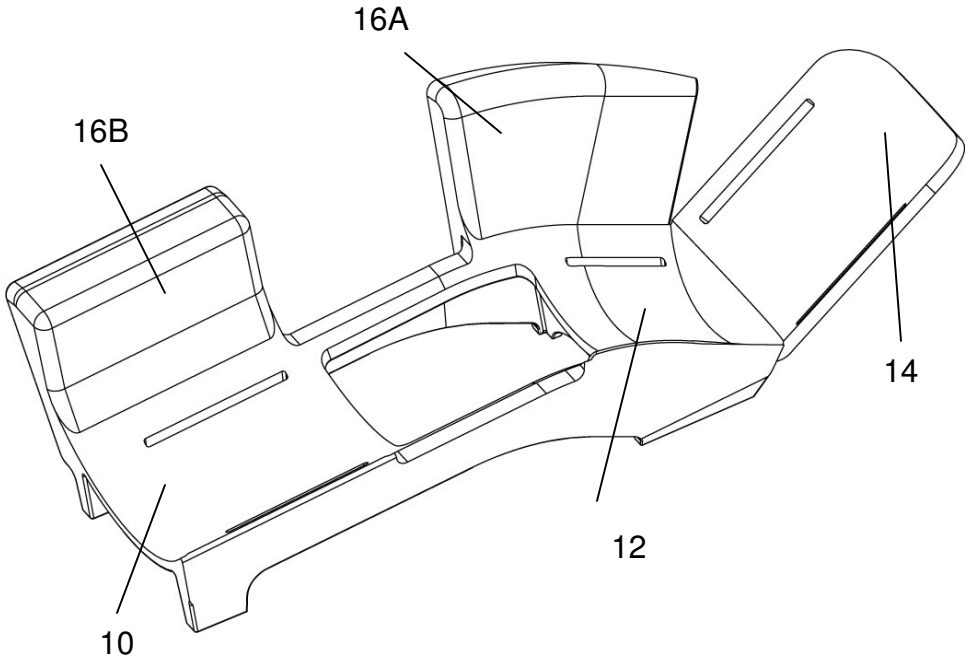

Figure 7

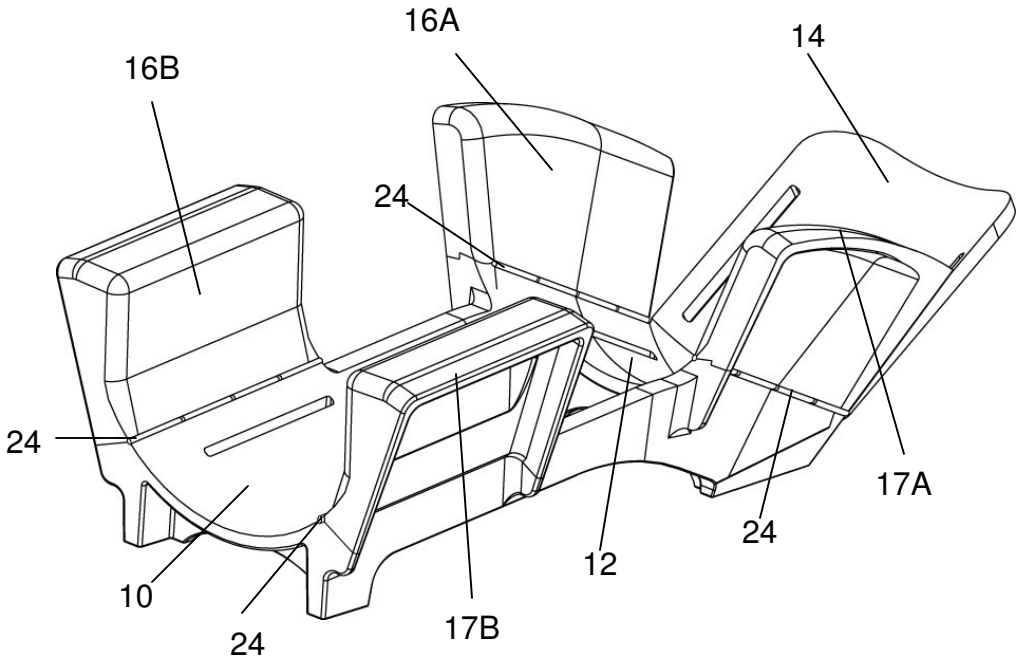

Figure 8

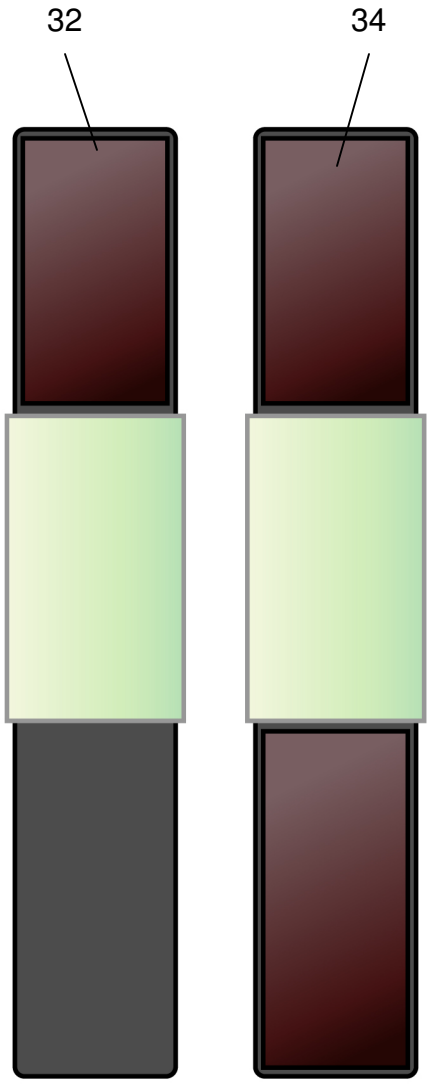

Figure 9A

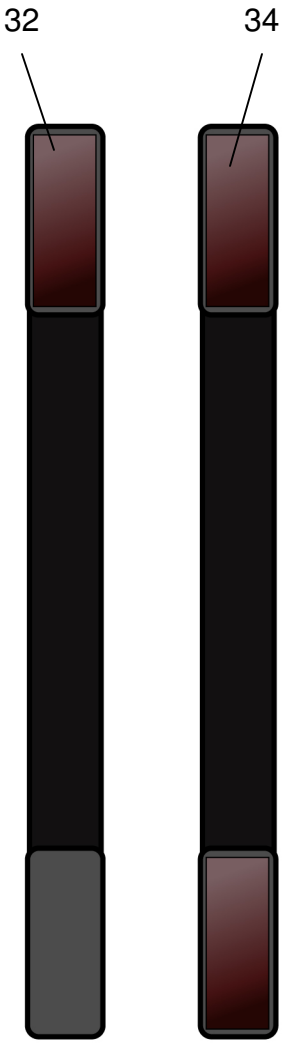

Figure 9B

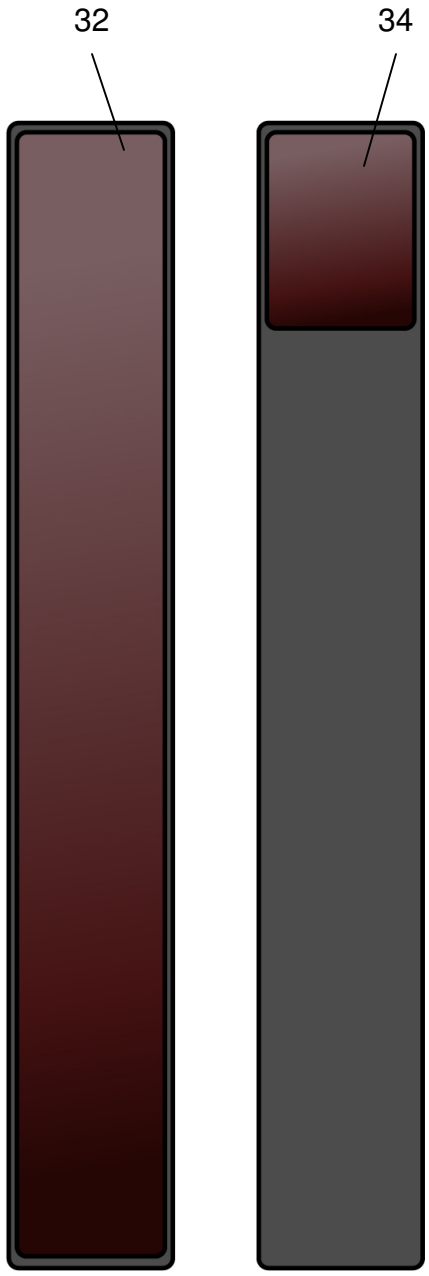

Figure 9C



Figure 10A

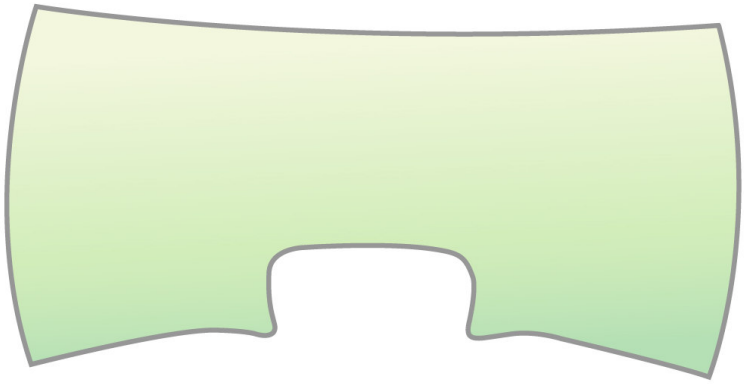

Figure 10B



Figure 10C