(12) INTERNATIONAL APPLICATION PUBLISHED UNDER THE PATENT COOPERATION TREATY (PCT)

(19) World Intellectual Property Organization
International Bureau

(43) International Publication Date
27 August 2009 (27.08.2009)

PCT

(10) International Publication Number
WO 2009/103631 A1

(51) International Patent Classification:
G03F 7/20 (2006.01)

(21) International Application Number:
PCT/EP2009/051516

(22) International Filing Date:
10 February 2009 (10.02.2009)

(25) Filing Language: English

(26) Publication Language: English

(30) Priority Data:
MI2008A000282 22 February 2008 (22.02.2008) IT

(71) Applicant *(for all designated States except US)*: **SAES GETTERS S.p.A.** [IT/IT]; Viale Italia 77, I-20020 Lainate MI (IT).

(72) Inventors; and

(75) Inventors/Applicants *(for US only)*: **MANINI, Paolo** [IT/IT]; Via Mazzini 104, I-20010 Arluno MI (IT). **CONTE, Andrea** [IT/IT]; Via Bramante da Urbino 32, I-20154 Milano MI (IT).

(74) Agents: **ADORNO, Silvano** et al.; Società Italiana Brevetti S.p.A., Via Carducci 8, I-20123 Milano (IT).

(81) Designated States *(unless otherwise indicated, for every kind of national protection available)*: AE, AG, AL, AM, AO, AT, AU, AZ, BA, BB, BG, BH, BR, BW, BY, BZ, CA, CH, CN, CO, CR, CU, CZ, DE, DK, DM, DO, DZ, EC, EE, EG, ES, FI, GB, GD, GE, GH, GM, GT, HN, HR, HU, ID, IL, IN, IS, JP, KE, KG, KM, KN, KP, KR, KZ, LA, LC, LK, LR, LS, LT, LU, LY, MA, MD, ME, MG, MK, MN, MW, MX, MY, MZ, NA, NG, NI, NO, NZ, OM, PG, PH, PL, PT, RO, RS, RU, SC, SD, SE, SG, SK, SL, SM, ST, SV, SY, TJ, TM, TN, TR, TT, TZ, UA, UG, US, UZ, VC, VN, ZA, ZM, ZW.

(84) Designated States *(unless otherwise indicated, for every kind of regional protection available)*: ARIPO (BW, GH, GM, KE, LS, MW, MZ, NA, SD, SL, SZ, TZ, UG, ZM, ZW), Eurasian (AM, AZ, BY, KG, KZ, MD, RU, TJ, TM), European (AT, BE, BG, CH, CY, CZ, DE, DK, EE, ES, FI, FR, GB, GR, HR, HU, IE, IS, IT, LT, LU, LV, MC, MK, MT, NL, NO, PL, PT, RO, SE, SI, SK, TR), OAPI (BF, BJ, CF, CG, CI, CM, GA, GN, GQ, GW, ML, MR, NE, SN, TD, TG).

Published:

— *with international search report (Art. 21(3))*

[Continued on next page]

(54) Title: LITHOGRAPHY APPARATUS USING EXTREME UV RADIATION AND HAVING A VOLATILE ORGANIC COMPOUNDS SORBING MEMBER COMPRISING A GETTER MATERIAL

(57) Abstract: A lithography apparatus (10) is disclosed using extreme UV radiation and having a hydrocarbon sorbing member comprising a getter material arranged in the process chamber (13) of said apparatus.

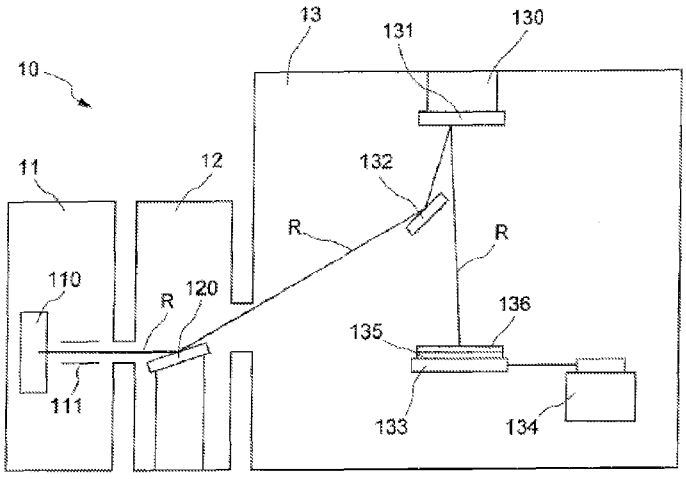

Fig.1

WO 2009/103631 A1

— *before the expiration of the time limit for amending the claims and to be republished in the event of receipt of amendments (Rule 48.2(h))*