FIG.1

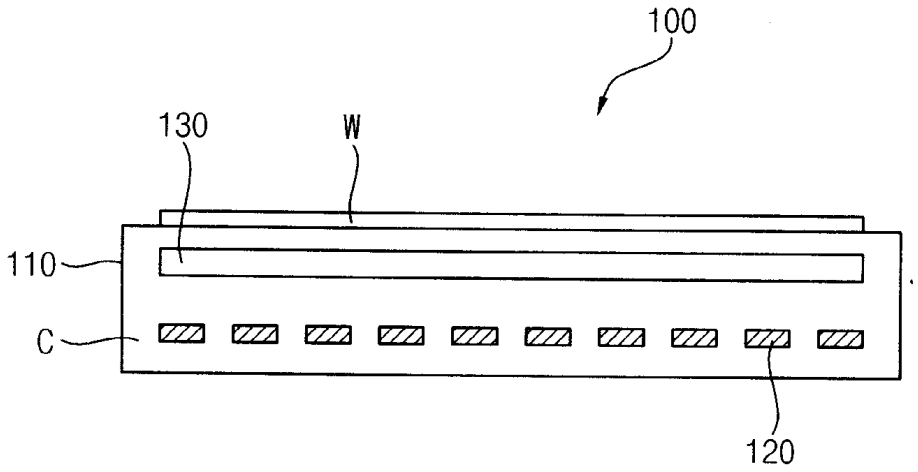

FIG.2

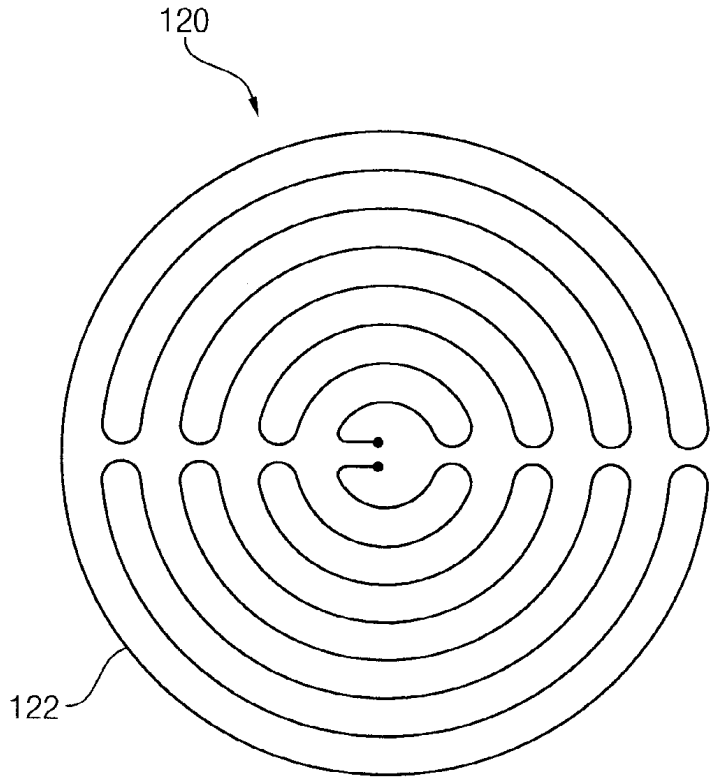

FIG.3

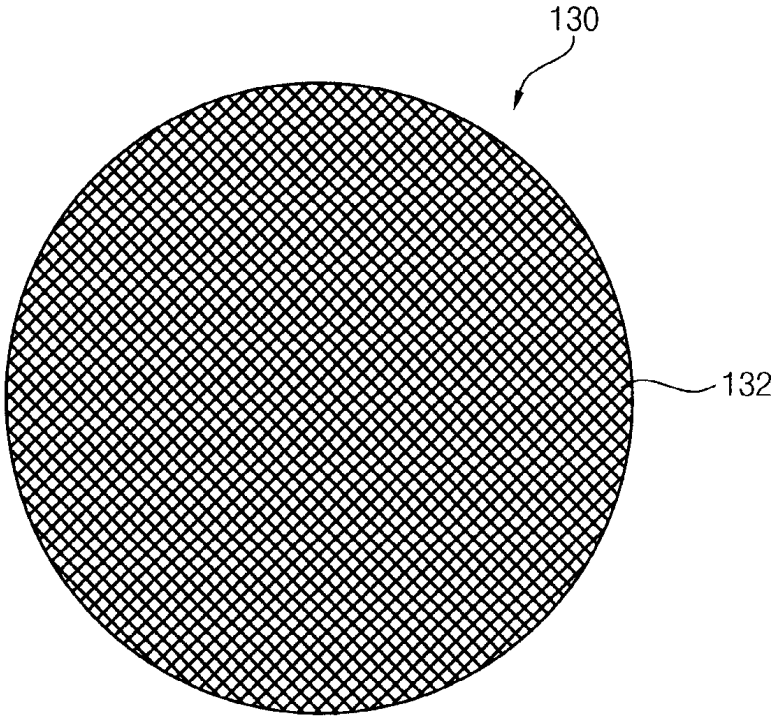

FIG.4A

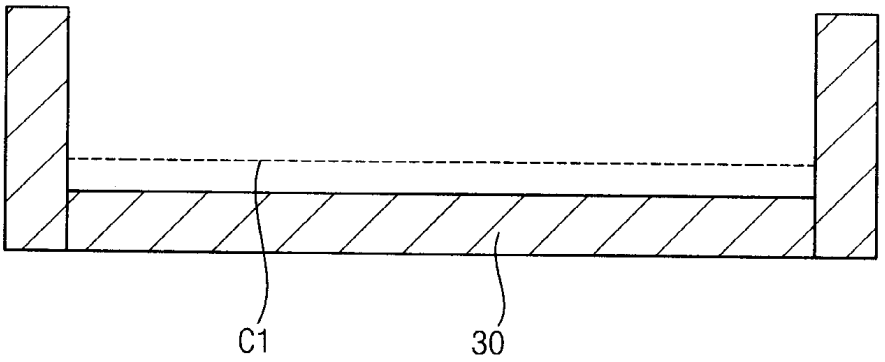

FIG.4B

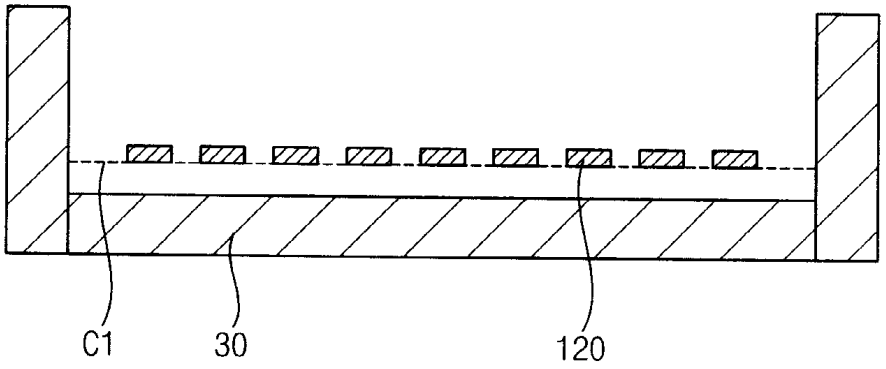

FIG.4C

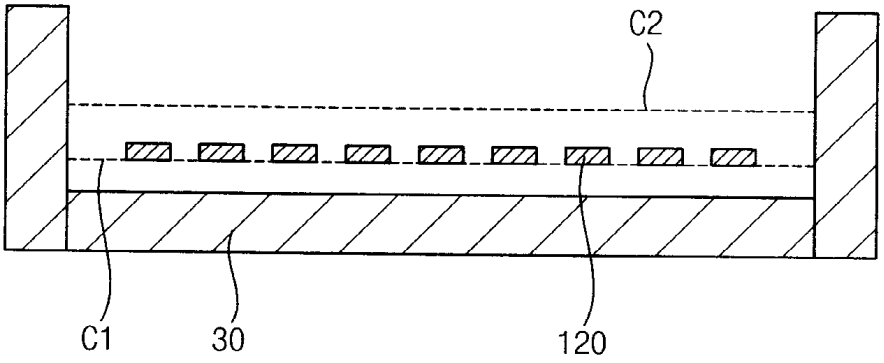

FIG.4D

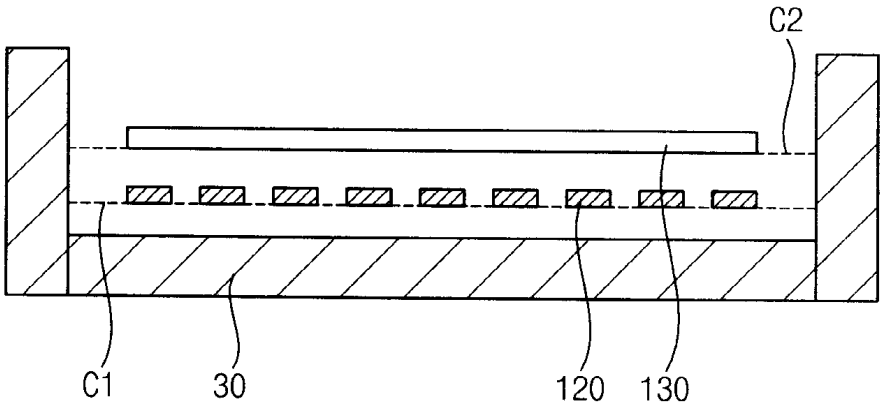

FIG.4E

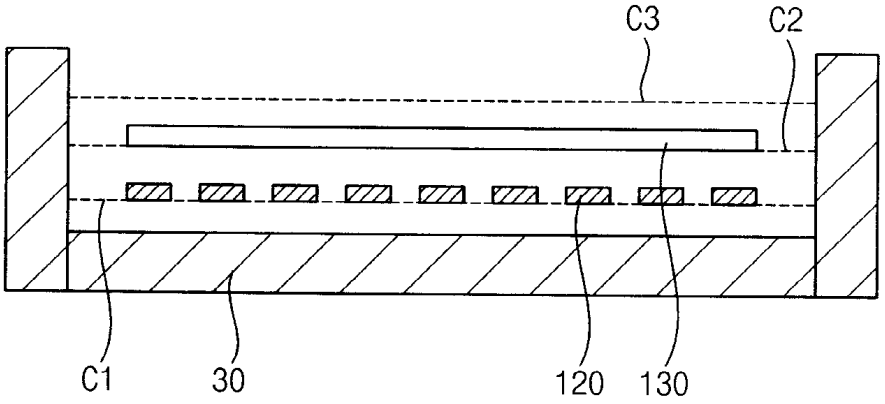

FIG.4F

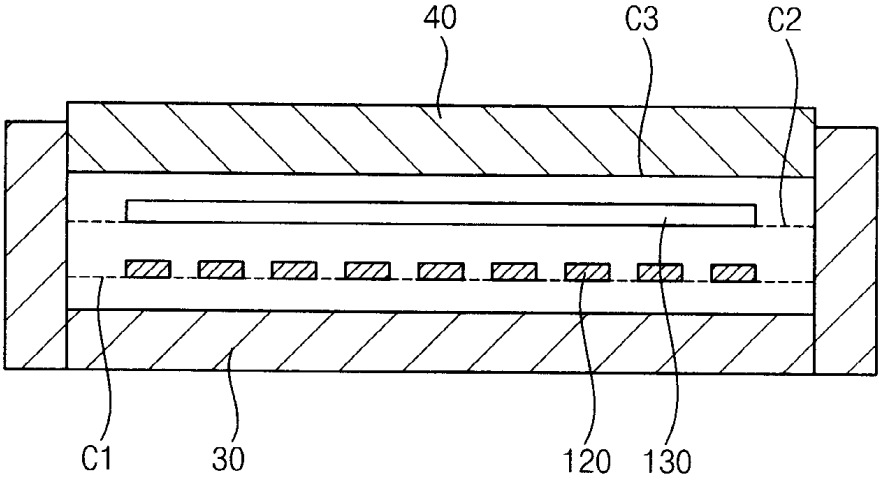

FIG.5

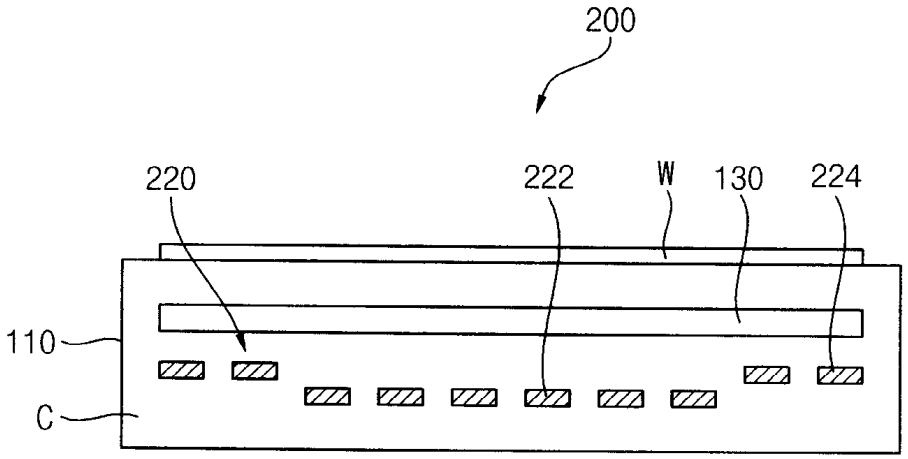

FIG.6

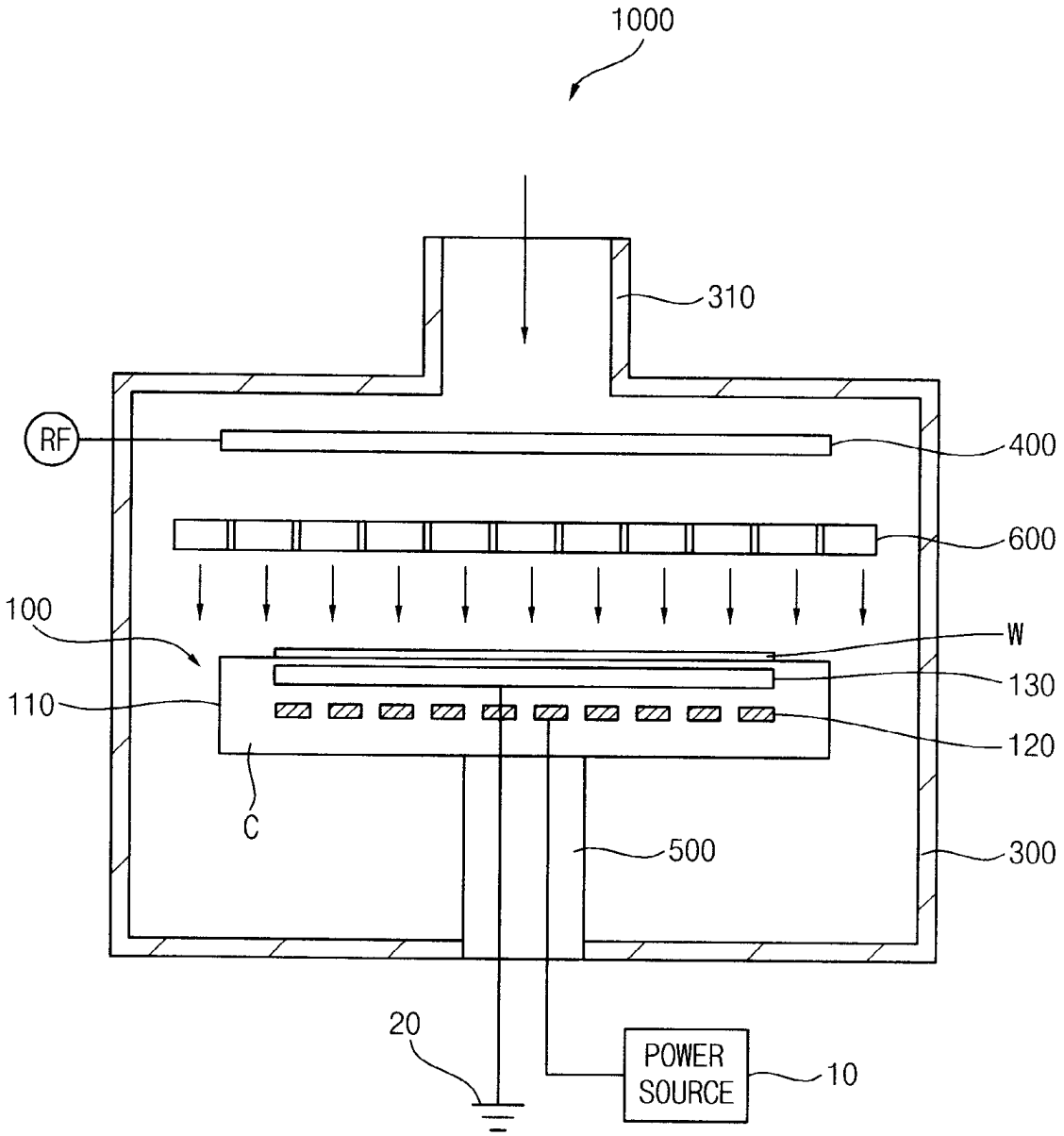
1000
310
RF
400
600
100
W
130
110
120
C
500
300
20
POWER SOURCE
10