BANK NOTE VALIDATOR

Description

Background of the Invention

The present invention relates generally to a bank note validator and more specifically to a bank note validator designed to distinguish between authentic documents and counterfeit documents.

Currency validation is most popularly used in connection with a product or service. With the ever increasing demand on entrepreneurs for increased sales and for increased financial transactions, innovative methods are required to maintain growth. Bank note acceptors have answered the call of the marketers, by providing the ability to facilitate high cost transactions mechanically. Bank note validators are most popular in the beverage vending food vending, product vending, gaming and wagering businesses. Change machines, i.e., currency to coin facilitating beverage, phone, and many other transactions are popular. In addition, bank note or currency validators are also used to authenticate such other financial instruments as stocks, bonds, and security documents. Therefore, as used herein, the term "bank notes" or "notes" will encompass all such applications.

Most bank notes, or notes, are quite mutilated and defaced prior to being removed from service. Prior to the removal from service the notes are legal tender and are expected to be used in transactions. The known bank note validators have a difficult time of validating mutilated and worn notes. The acceptance of such legitimate notes is always less than one hundred percent in a currency validator. Counterfeit elimination is a very demanding requirement. Simply stated, all nongenuine notes presented to the bank note validator must be automatically rejected, regardless of the origin. Even counterfeit documents which have not yet been developed are expected to be detected and rejected when they appear.

Most bank note validators have been designed targeting generalized markets, and the industry has permitted reduced performance in one or more sensing areas, in favor of the more economical approach of one size fits all. Unfortunately, most end user applications are very different, and one size does not fit all. In fact, beverage vending or music machine product losses are not even comparable with those of change machines,

postal systems, or ATM applications. Yet often the criteria for usage is the cost of the system. Bank note validator manufacturers compete in applications where their machines perform with the best fit for the customer. Often nonperforming machines are permitted to enter the marketplace where there is no bonafide means of performance quality testing, and the quality performing machine manufacturers are usually forced to provide extra service or price cuts to maintain sales.

By far, bank note validation has been most popular in the United States, with the introduction of the beverage vending validator. These validator systems were simple, yet efficient. The major fault was with the technology implemented in the validation process. Each and every manufacturer fell prey to the casual counterfeiter. As the bank note validator proliferated throughout many types of applications, the demands for better systems became even greater. Original systems relied on the magnetic information inherent in genuine U.S. currency and a few foreign countries. But this technique is highly susceptible to the modern copy machine. Most offices, and libraries in the United States have black and white copy machines, and most everyone has access to one. Optical systems began to be employed with the intent of improving security. These systems generally work on some type of image analysis technique. They are susceptible to having poor performance with worn and mutilated notes as well as extremely new notes. Most bank note validators employ both optical and magnetic systems in an effort to gain maximum validation performance and security.

In systems where magnetics are used, it is not uncommon to have a note designed with the narrowest stripe possible which will defeat the system. In optical systems, the image of a note is easily reproduced with modern photocopying techniques. Often the image is enhanced in specific areas to specifically fool the bank note validator.

Bank notes worldwide share at least one thing in common: none are immune from counterfeiting. Casual counterfeiting with facsimiles is on the rise with increased accessibility to technology. Also on the rise is the demand for currency systems.

By far the greatest advancement in the bank note validator has been with the implementation of optical systems. The optical devices have been used transmissively and reflectively. Optical systems are very good at analyzing currency, since all bills are designed to be recognized on sight by humans. Many features such as watermarks,

security threads, and colored threads inserted as counterfeit deterrents are detectable primarily by sight. Therefore it is reasonable to understand why people have high expectations towards electronic vision systems. Unfortunately the human model for counterfeit detection cannot be built electronically into bank note validation systems because the cost would be prohibitive. A common method employed is to measure the signal responses reflected, or transmitted through the printed and non-printed areas on the surface of a bank note, utilizing common light sources and comparing the result with an image stored in the currency validator memory. Major difficulties are encountered with detecting properly the very new bank note, and the degraded image resulting from the worn bank note, compounded by printing misregistrations, while rejecting the acceptance of counterfeits.

In the performance of spectral analysis it is possible to characterize the reflective, transmissive and absorptive properties inherent in genuine bank notes. With light of wavelengths narrowly focused between ultraviolet and infra red. It is possible to determine the chemical composition of bank notes, as is employed in scientific analysis of other chemical studies, and store the results in a database for comparison later. In fact, utilizing the strictly controlled "chemical signature" of bank notes would be just the thing to detecting frauds and counterfeits. However, to implement a spectrum analyzer in the bank note validation system would be prohibitive in both terms of expense and time required to perform a scan of the full light spectrum for each point along the length of a bank note.

The spectral analysis approach is not necessarily a fine resolution type system relying on the printed image of the bank note. It is a system which relies on the "signature bands" of genuine bank notes as they are generated by the absorbance, reflectance and transmission of specific wavelengths of light. A single detector is employed with several Light Emitting Diodes (LED's) modified (filtered) in such a way that only a specific wavelength of light (±) a tolerance (say 5 manometers), is emitted by each LED. The common detector measures the effect of reflectance or absorbance, transmittance of the bank note to each LED individually and combined. Thus creating a signature of the bank note as it responds to various narrow wavelengths of light reacting on a single area of the note as measured by a single detector, the system as described

would provide the most benefit if employed as an array of such subsystems, facilitating maximum security and resistance to the striping of authentic bank notes.

Validation techniques have been consistently foiled by the ability of individuals to replicate the features inherent to bank notes, with engineered facsimiles. The casual counterfeiter has at their disposal a variety of tools which are sufficient in generating reasonable facsimiles to foil even the best Currency Validator. Copy Machines, black and white, color copiers, fax machines, ink jet copiers, computers and scanners are all tools which may be used to foil the common bank note validator. Some of these methods are very detailed and complex, yet, none utilize the exact chemistry found in engraving dyes and inks used in bank note printing.

Current bank note validator technology typically uses one or more optical sensors to detect the optical reflection and or absorption characteristics of bank notes. Many systems incorporate emitters and detectors operating in 2 or more wavelengths. These units usually take several points in discrete paths or channels along the long axis of a bank note. By comparing the sampled results with pre-stored results from real bank notes, a determination can be made as to the type and genuineness of the bank note.

Typically the emitter/detector pairs comprise at least one set of infrared sensitive units. This allows data to be taken for almost all currencies, regardless of the visible color of the bank note. However a drawback to this method is that a two tone copy (black & white) or a copy made on colored paper can be devised that will produce data that mimics a real bank note, causing a counterfeit bank note to be accepted as genuine. As color copy technology has improved, it has also become possible to produce color copies almost identical in the visual spectrum with real bank notes.

Many countries constantly change their currency to limit counterfeit bank notes, cut production costs, improve longevity, etc. Several countries use different width bank notes as well. These different widths are difficult to accommodate in a single validation unit since the data channel for the narrower bank notes will vary depending on the insertion location in the unit. This usually requires several databases to be developed for one denomination. During the validation process it is necessary to scan each of these databases in succession, and then decide if a match is possible. This can result in a process that takes several seconds, annoying or worrying the user.

Since most currencies in the world use different color combinations on different denominations, a validator that can detect these colors would be able to select which database to use to compare with the bank note. This would reduce the processing time significantly since only one set of databases needs searching. Two tone copies might be eliminated since there would be no color in the data collected. Copies printed on color paper could also be eliminated, since the subtle color variations on real currency would be missing. By comparing the color data with infrared data, acceptance of color copies may be greatly reduced.

Typical systems to detect color utilize three sensors for the Red, Green and Blue portions of the visible spectrum, and a white light to illuminate the object. White light sources that produce an even spectrum of light are usually expensive, bulky or require an exotic power supply. Each sensor has a filter to allow only a specific portion of the spectrum to pass. By combining the information from the three sensors, and applying mathematical equations to the data, the color of an object can be determined.

What all of the present bank note validators lack, and what is desirable to have, is the ability to quickly and accurately determine the authenticity of bank note while keeping the cost and size of the validator to a minimum. This longstanding but heretofore unfulfilled need for a compact and relatively inexpensive bank note validator that can quickly and accurately distinguish among authentic and counterfeit bank notes is now fulfilled by the invention disclosed hereinafter.

Summary of the Invention

According to the present invention a bank note validator is comprised of a detector to detect the light from LEDs reflected off of the surface and transmitted through a selected bank note to determine the authenticity thereof. The system comprises four emitters, a detector, and a programmable gain amplifier.

Full details of the present invention are set forth in the following description and in the accompanying drawings.

Brief Description of the Drawings

For a more complete understanding of the nature and objects of the invention, reference should be made to the following detailed description, taken in connection with the accompanying drawings, in which:

Fig. 1 shows schematically the current invention;

Fig. 2 shows schematically the function of the sensing units;

Similar reference numerals refer to similar parts throughout the several views of the drawings.

Description of Preferred Embodiments

The object of this invention is a method to determine the color of a bank note, simply, accurately, and inexpensively. This method utilizes a PIN diode detector whose spectral characteristics resemble the human eye.

Since the typical bill validator needs to be small and inexpensive, multiple sensors and white light sources are not the preferred method of construction. The current embodiment of the invention utilizes different visible colored LED's to illuminate the bill and an IR detector with sensitivity in the visible spectrum. Four LED's--namely, red, green, blue and infrared, are arranged in such a manner as to shine on the same fixed point, are contained in the system. The detector is mounted to collect the reflected or transmitted light from the LED's.

In the present invention, photodiode 10 consisting of multiple LED's is arranged to selectively sense the light emission from the bank note being tested, as it passes through the validating section, of the bank note validator. The signal, i.e., the current produced by the photodiode 10 from a selected LED is fed to a amplifier section generally depicted by the numeral 12, the operation of which, including the sequencing of the output from this section 12 is controlled by a computer control (CPU) stage 14 for analysis, display and determination of the validity of the bank note. Dependant on the results obtained, the bank note is either accepted or rejected.

Specifically, as seen in Fig. 2, the current from the photodiode, obtained through LED 18 is fed to a first step amplifier 20 where it is converted into a voltage. The input signal current is filtered by a capacitor 22 in the first stage to reduce noise from external sources. The amplifier 20 is a low offset voltage type to reduce any error due to the high gain of the circuit. Output from the first stage is input to the feedback pin of a multiplying D/A converter 24. The D/A in conjunction with a second amplifier 26 comprises a programmable gain stage, i.e., an amplifier whose gain can be modified by a microprocessor 28. The output at terminal 30 of the second amplifier 26, may thus be

balanced to the light or wavelength of a selected color, since each wavelength of light may be defined by a different gain setting, to balance the final output. A final amplifier stage 32 acts as an inverter and low pass filter (cutoff between 1Khz and above) to reduce noise from external sources and prevent antialiasing of the signal at the A/D converter. The output from the final or third amplifier 32 is passed via terminal 34 to the control CPU 16.

To take a sample, LED 18 is illuminated, the gain of the amplifier 20 is set, and a sample is taken at the output of the filter stage by an A/D converter 24. The output from the A/D converter if fed to the programmable gain control re: amplifier 26 and processor 28, which is then sequenced through Red, Green, Blue and IR. The output being then stored in memory of the CPU for processing, display and control of the validator apparatus.

The arrangement shown in Fig. 1 utilizes four separate amplifier channels R, G, B for each LED color red, green and blue respectively and IR for the infra red light. These are pre-set non-programmable frequency amplifiers for each color respectively. It also requires associated gain and filter circuits, although, their operation is essentially as described with respect to Fig. 2 provides separate amplifier channels for each LED color. While comprising more parts, the gain of each stage could be set individually in the factory. This precludes the need for adjustment in the field by a highly skilled technician. From time to time the unit might require servicing as parts age, although, this is not a significant problem.

Therefore, the arrangement shown in Fig. 2, where the color output is controlled and balanced by the microprocessor 28 through a single amplifier/gain circuit is preferred. This arrangement eliminates separate amplifier for each color reducing the number of parts required and improves linearity of the system.

As mentioned previously, the present invention allows the use of either reflective or transmitted light to be detected. One reason for using transmitted light is to assist in compensating for the change in brightness of LED's due to temperature changes. Validators are used in various environments from the Sahara Desert to Greenland for vending application. Temperature extremes of -25°C to +50°C are not unknown. Each LED's light output for a given current is proportional to temperature so that as the

temperature increases, light output decreases and vice-versa. In addition, LED's made from different processes respond differently to temperature in varying degrees. Suffice it to say the Red, Green and Blue devices behave very different from each other with temperature variation. Since the present invention requires that the response to white light remain fairly constant, a machine adjusted to work in New York in September, will not function in the Sahara or Greenland.

To compensate for temperature variation, the programmable gain stage is provided with a video adjustment sensor to monitor the LED brightness constantly and adjust the gain for each light color channel. When a video adjustment is made, the relative readings for the transmitted light is made for each such channel, with no paper or bank note between the LED's and the detector. These readings are stored in memory. As the validator waits for a bill to be inserted, the microprocessor monitors the LED's and modifies the gains to maintain them identical with the stored readings. This maintains the balance over the expected temperature variations. To adjust the unit a special card is inserted. This card has white, black, red, green and blue regions on it. As each different area passes under the sensor, the relative strengths of the responses are measured. An algorithm in the microprocessor then adjusts the D/A settings for each LED to achieve the proper balance.

It shall be noted that all of the above description and accompanying drawings of the invention are to be considered illustrative and are not to be considered in the limiting sense.

It is also understood that the following claims are intended to cover all of the generic and specific embodiments and features of the invention herein described.

What Is Claimed Is:

1. In a bank note validator having means for determining the validity of the bank note and for accepting and rejecting the bank note, a system for determining the color correctness of said bank note comprising, a light detector for sensing the admission of red, green, blue, and infrared light respectively from said bank note, A/D means for converting the output of said light detector into a digital signal, means for selectively limiting the output gain of said A/D means to obtain an output signal indicative of selected one of said color, and means for providing said output signal to the means for determining validity of the bank note.

2. The system according to Claim 1 including means interposed between said light detector and said A/D convertor means for amplifying and filtering analog signal.

3. The system according to Claim 1 wherein said limiting means comprises an amplifier and a microprocessing unit for programmably controlling the gain of the amplifier to provide selected frequency levels of output.

4. The system according to Claim 1 wherein said light detection means comprises an array of light detection photodiodes each being preset for respective one of said colors.

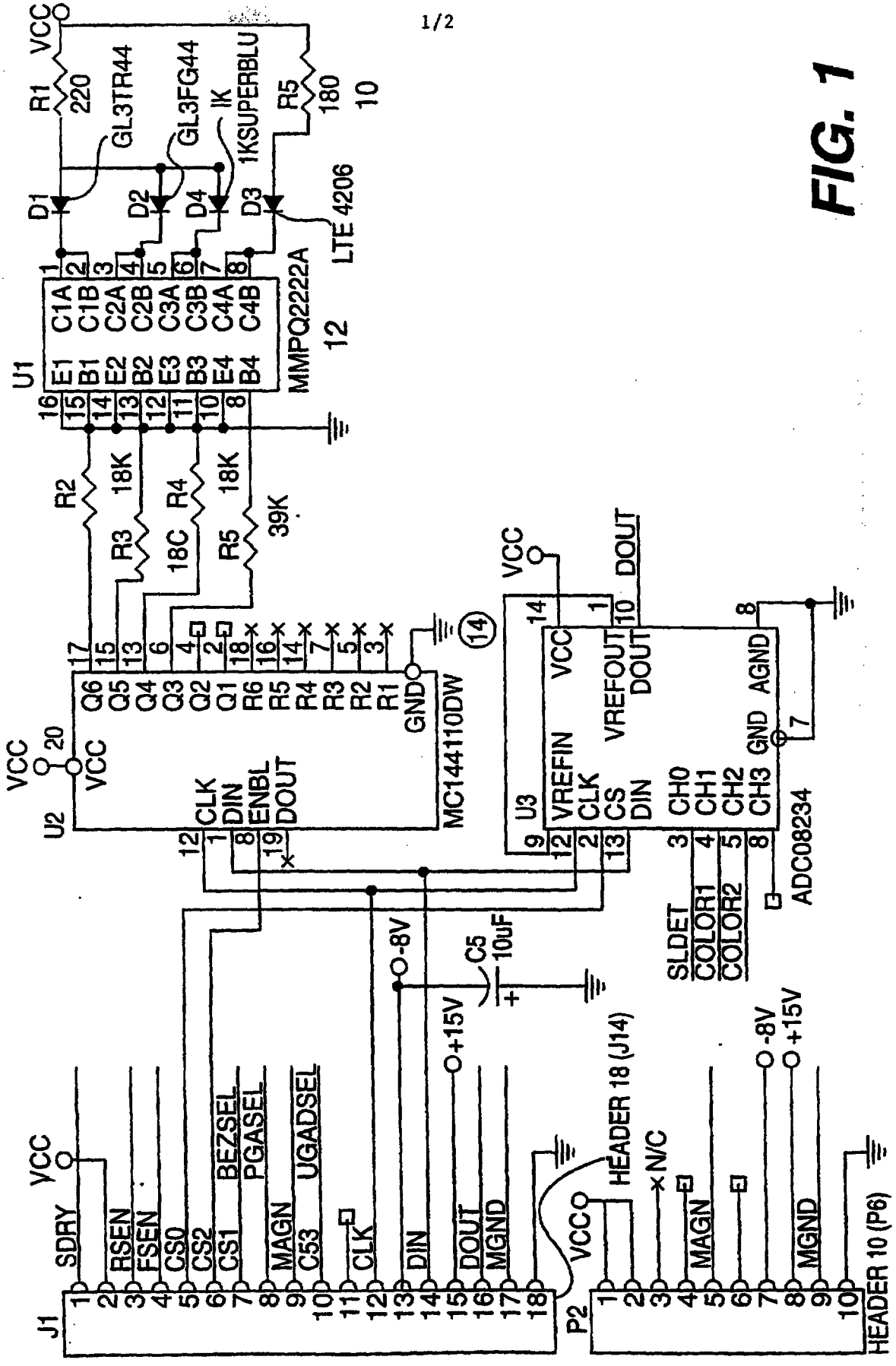
VCC
R1
220
GL3TR44
GL3FG44
IK
1KSUPERBLU
R5
180
10
D1
D2
D4
D3
LTE 4206
U1
MMPQ2222A
12
C1A C1B C2A C2B C3A C3B C4A C4B
E1 B1 E2 B2 E3 B3 E4 B4
R2 18K
R3 18K
R4 18C
R5 39K
Q6 Q5 Q4 Q3 Q2 Q1 R6 R5 R4 R3 R2 R1 GND
MC144110DW
U2
VCC
CLK DIN ENBL DOUT
U3
VREFIN CLK CS DIN
VREFOUT DOUT
CH0 CH1 CH2 CH3 GND AGND
ADC08234
SLDET
COLOR1
COLOR2
-8V
C5 10uF
+15V
J1
SDRY RSEN FSEN CS0 CS2 CS1 BEZSEL PGASEL MAGN C53 UGADSEL CLK DIN DOUT MGND
P2
HEADER 18 (J14)
N/C
MAGN
MGND
HEADER 10 (P6)

FIG. 1

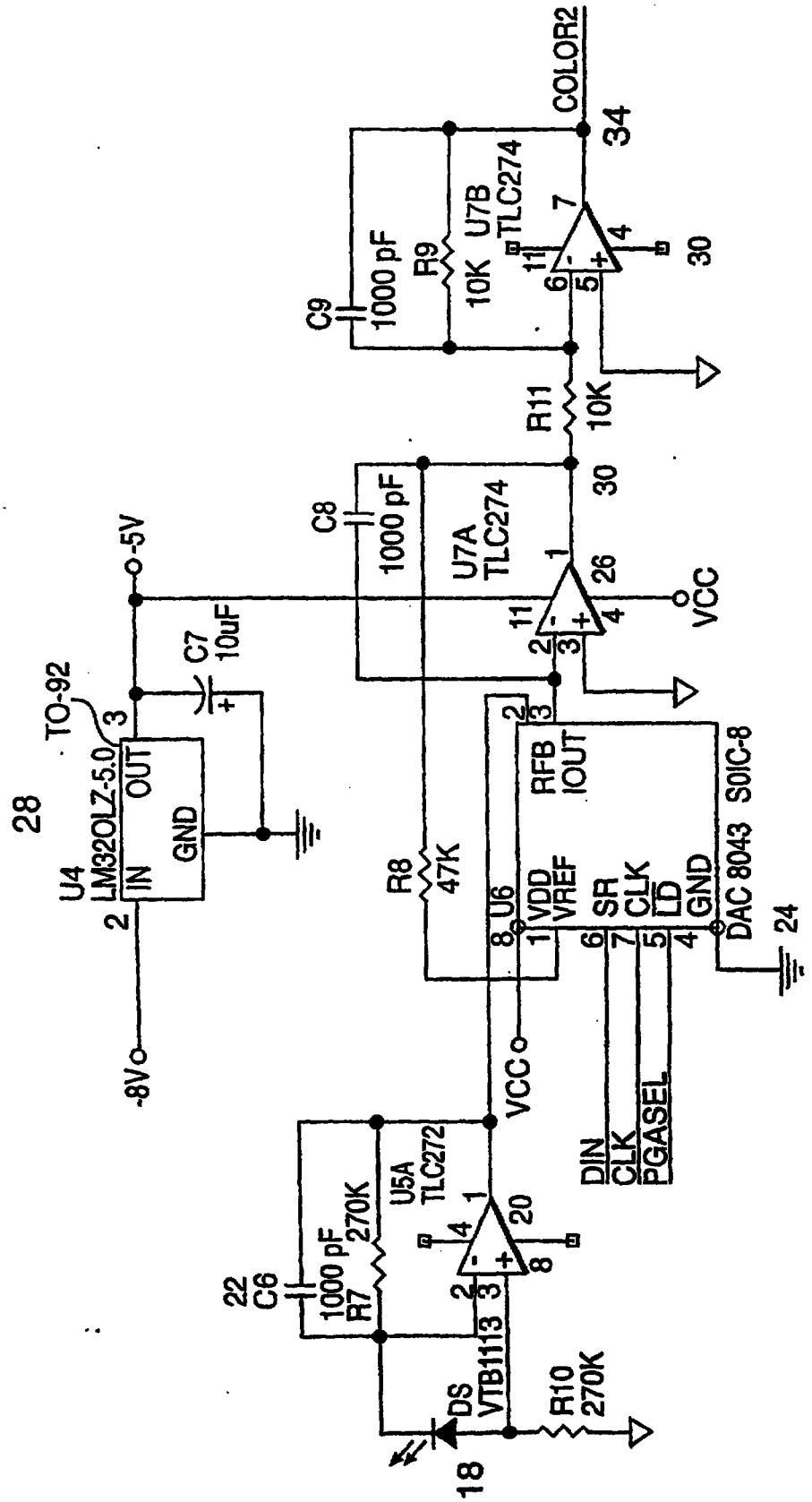
COLOR2
34
C9
1000 pF
R9
10K
U7B
TLC274
30
R11
10K
C8
1000 pF
U7A
TLC274
26
VCC
-5V
C7
10uF
TO-92
28
U4
LM320LZ-5.0
IN
OUT
GND
-8V
R8
47K
U6
DAC 8043
SOIC-8
RFB
IOUT
VDD
VREF
SR
CLK
LD
GND
24
DIN
CLK
PGASEL
VCC
22
C6
1000 pF
R7
270K
U5A
TLC272
20
DS
VTB1113
18
R10
270K

FIG. 2

9806098-1
IPOS

PCT WORLD INTELLECTUAL PROPERTY ORGANIZATION
International Bureau

INTERNATIONAL APPLICATION PUBLISHED UNDER THE PATENT COOPERATION TREATY (PCT)

(51) International Patent Classification 6 : G07D 7/00 — A1

(11) International Publication Number: WO 97/46982

(43) International Publication Date: 11 December 1997 (11.12.97)

(21) International Application Number: PCT/US97/08906

(22) International Filing Date: 27 May 1997 (27.05.97)

(30) Priority Data:
(1) 08/659,139 — 4 June 1996 (04.06.96) — US

(71) Applicant: COIN BILL VALIDATOR INC. [US/US]; Suite 200, 20 East Sunrise Highway, Valley Stream, NY 11581-1260 (US).

(72) Inventors: (1) WALSH, Michael; 22 Travis Road, East Patchoque, NY 11772 (US). (2) BLASZCZEC, Miroslaw; 225 S. First Street, Lindenhurst, NY 11757 (US). (3) MAZOWIESKY, Thomas, W.; 2809 Sandra Court, Medford, NY 11763 (US).

(74) Agents: GARRETT, Arthur, S. et al.; Finnegan, Henderson, Farabow, Garrett & Dunner, L.L.P., 1300 I Street, N.W., Washington, DC 20005-3315 (US).

(81) Designated States: AL, AM, AT, AU, AZ, BA, BB, BG, BR, BY, CA, CH, CN, CU, CZ, DE, DK, EE, ES, FI, GB, GE, GH, HU, IL, IS, JP, KE, KG, KP, KR, KZ, LC, LK, LR, LS, LT, LU, LV, MD, MG, MK, MN, MW, MX, NO, NZ, PL, PT, RO, RU, SD, SE, SG, SI, SK, TJ, TM, TR, TT, UA, UG, UZ, VN, YU, ARIPO patent (GH, KE, LS, MW, SD, SZ, UG), Eurasian patent (AM, AZ, BY, KG, KZ, MD, RU, TJ, TM), European patent (AT, BE, CH, DE, DK, ES, FI, FR, GB, GR, IE, IT, LU, MC, NL, PT, SE), OAPI patent (BF, BJ, CF, CG, CI, CM, GA, GN, ML, MR, NE, SN, TD, TG).

Published
With international search report.

(54) Title: BANK NOTE VALIDATOR

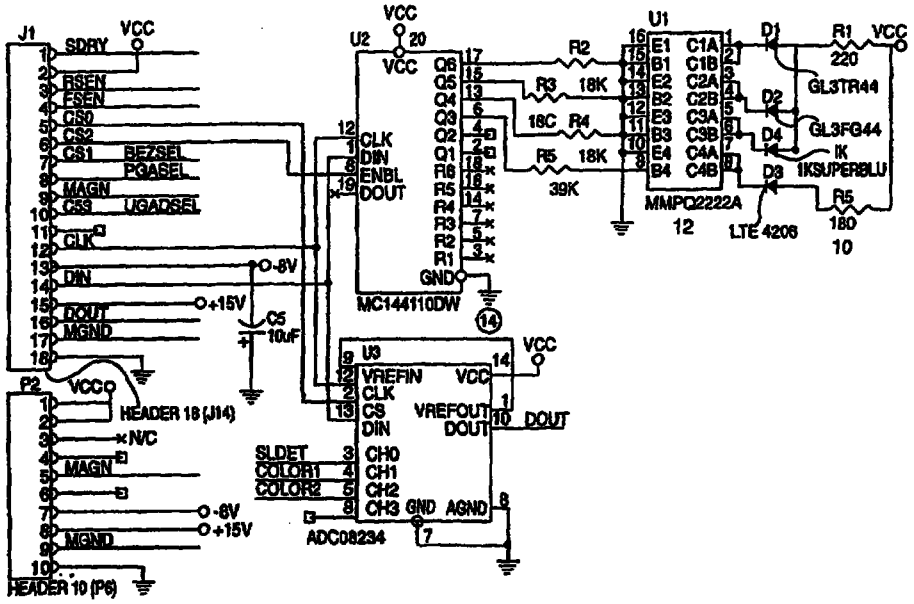

(57) Abstract

A bank note detector has four LED's sensing Red, Green, Blue, and infrared reflection and transmissivity of the bank note. The signals from the amplifiers are fed to a microcomputer and/or micro-processor for analysis.