FIG. 1

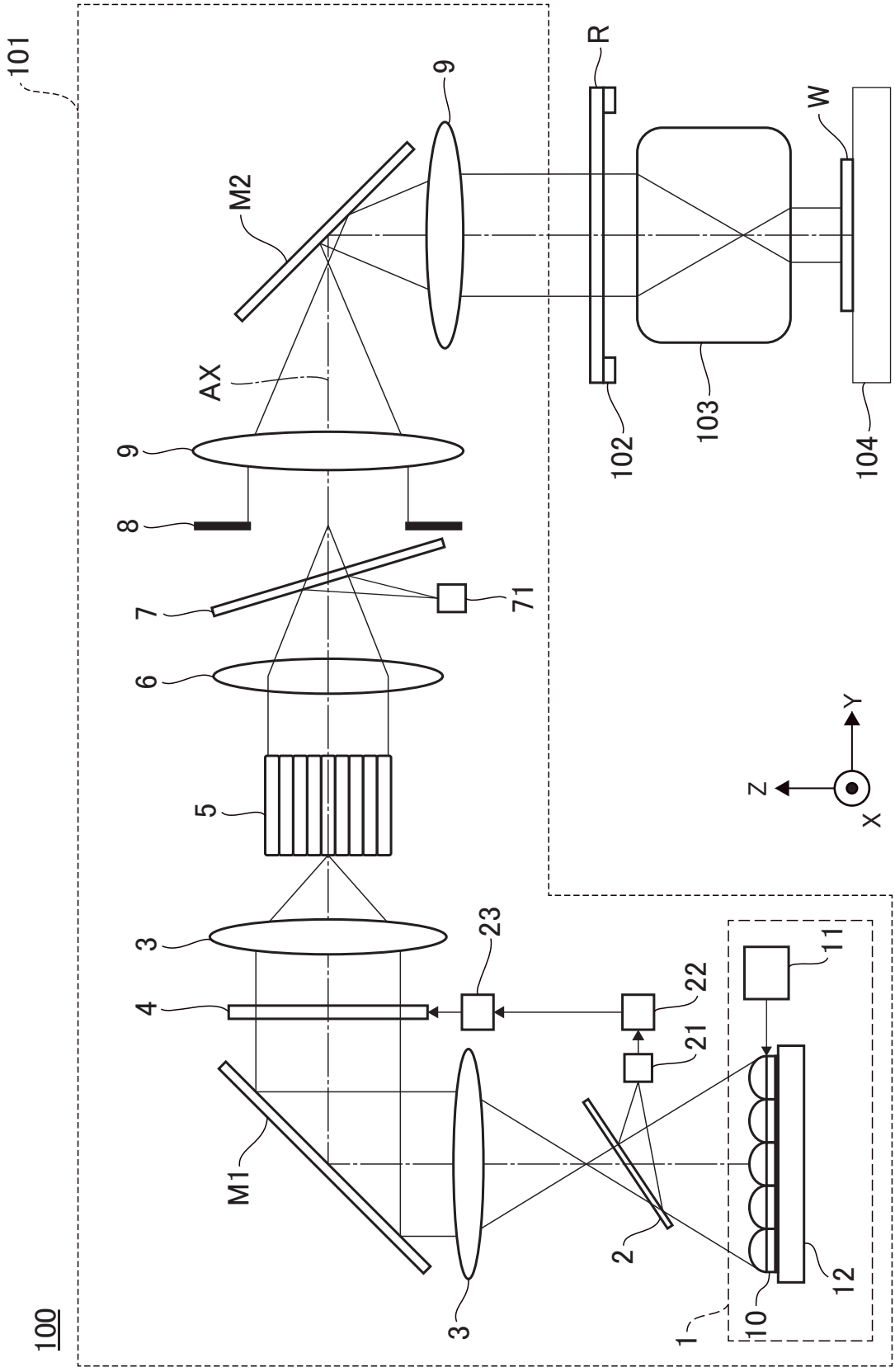

FIG. 2A

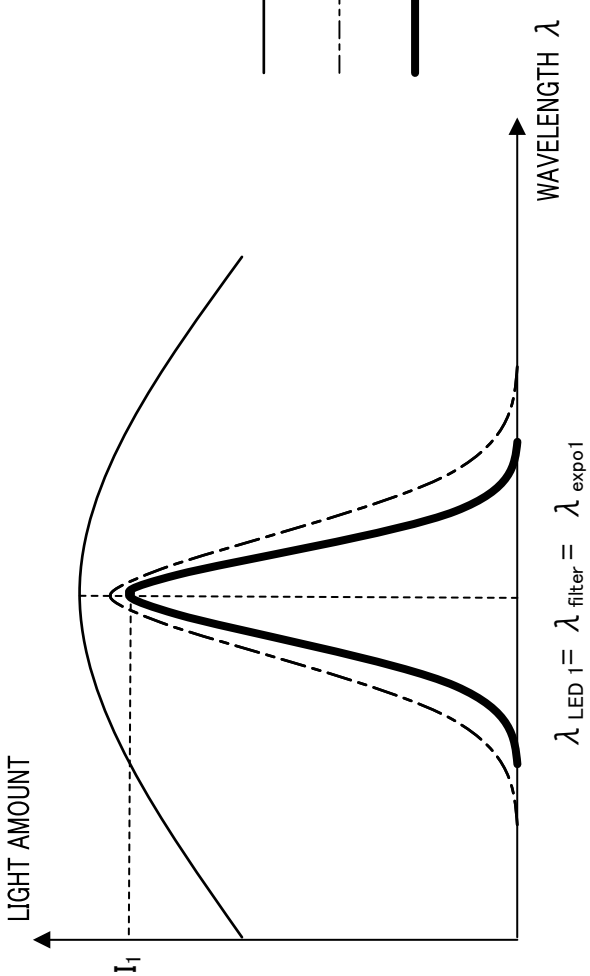
WAVELENGTH CHARACTERISTICS OF LED ELEMENT
(CENTER WAVELENGTH λ LED1)
TRANSMISSION CHARACTERISTICS OF WAVELENGTH
SELECTION ELEMENT (CENTER WAVELENGTH λ filter)
WAVELENGTH CHARACTERISTICS OF EXPOSURE LIGHT
(CENTER WAVELENGTH λ expo1)
LIGHT AMOUNT
I1
WAVELENGTH λ
λ LED 1= λ filter = λ expo1

FIG. 2B

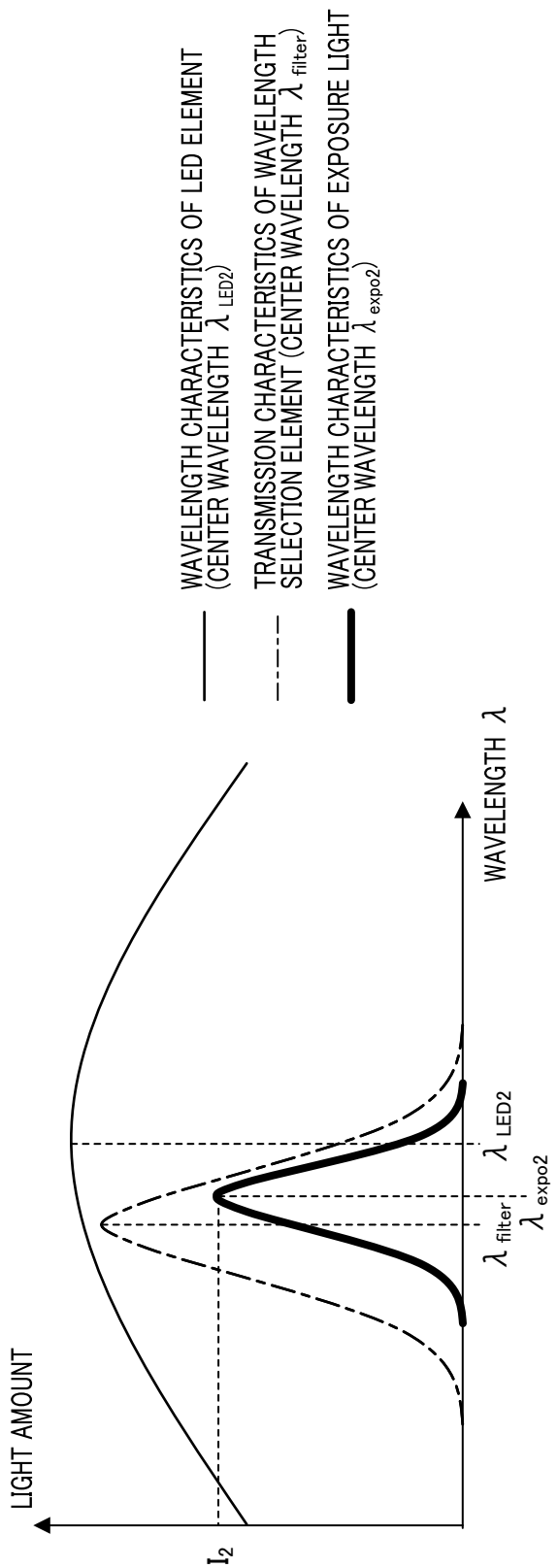
WAVELENGTH CHARACTERISTICS OF LED ELEMENT
(CENTER WAVELENGTH λ LED2)
TRANSMISSION CHARACTERISTICS OF WAVELENGTH
SELECTION ELEMENT (CENTER WAVELENGTH λ filter)
WAVELENGTH CHARACTERISTICS OF EXPOSURE LIGHT
(CENTER WAVELENGTH λ expo2)
LIGHT AMOUNT
I2
WAVELENGTH λ
λ LED2
λ filter
λ expo2

FIG. 3

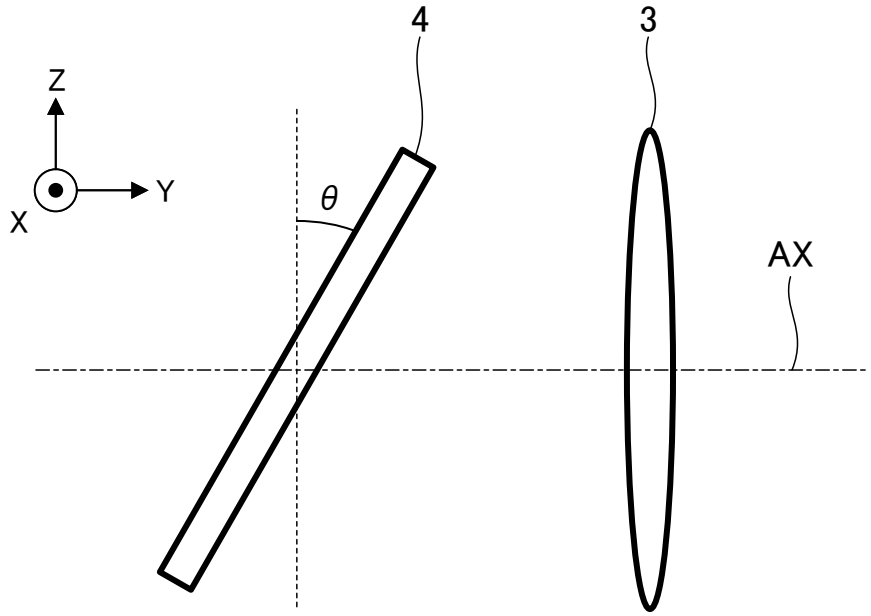

FIG. 4A

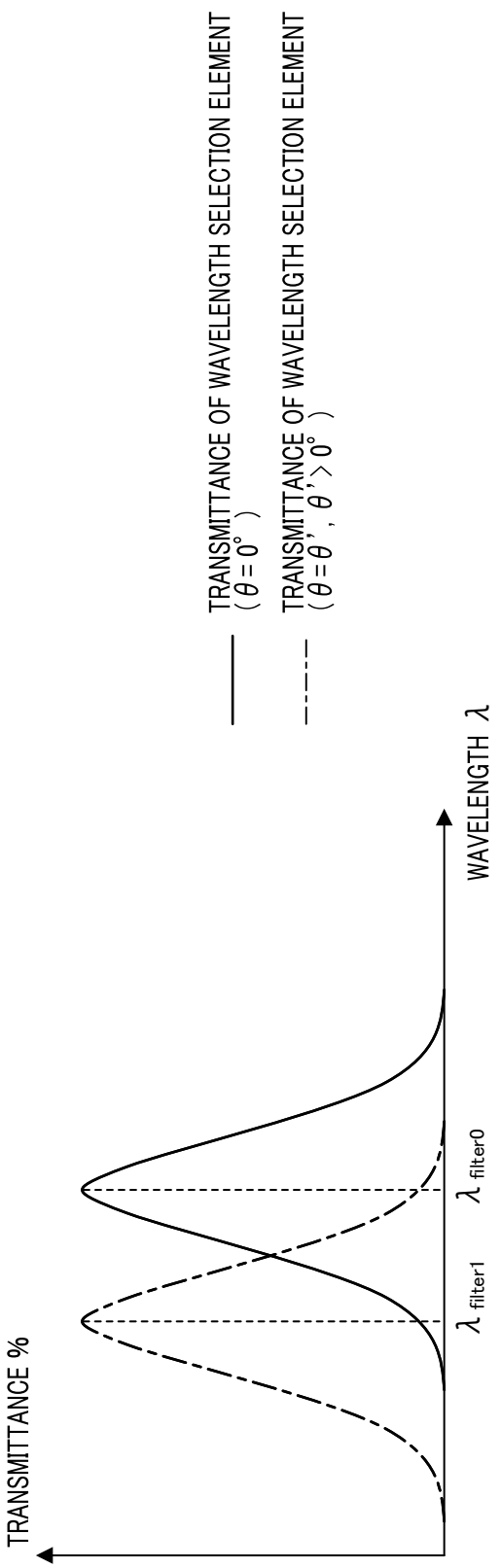
TRANSMITTANCE OF WAVELENGTH SELECTION ELEMENT
(θ = 0°)
TRANSMITTANCE OF WAVELENGTH SELECTION ELEMENT
(θ = θ', θ' > 0°)
TRANSMITTANCE %
WAVELENGTH λ
λ filter1
λ filter0

FIG. 4B

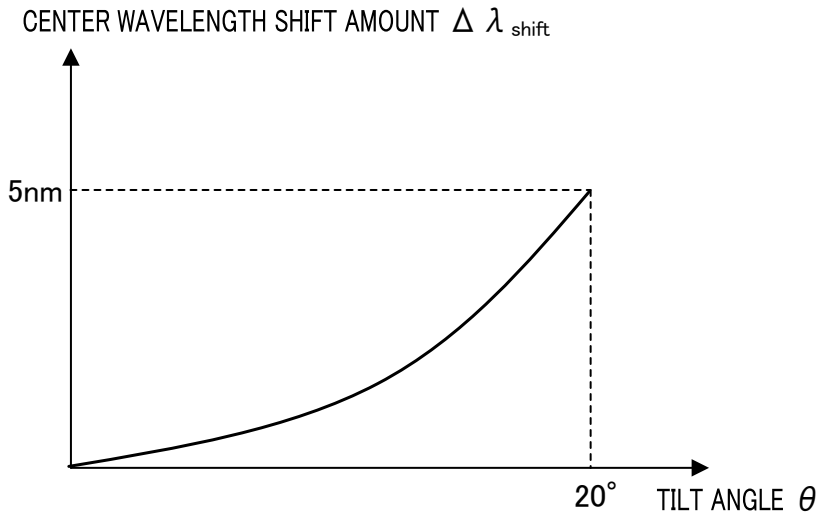

FIG. 5

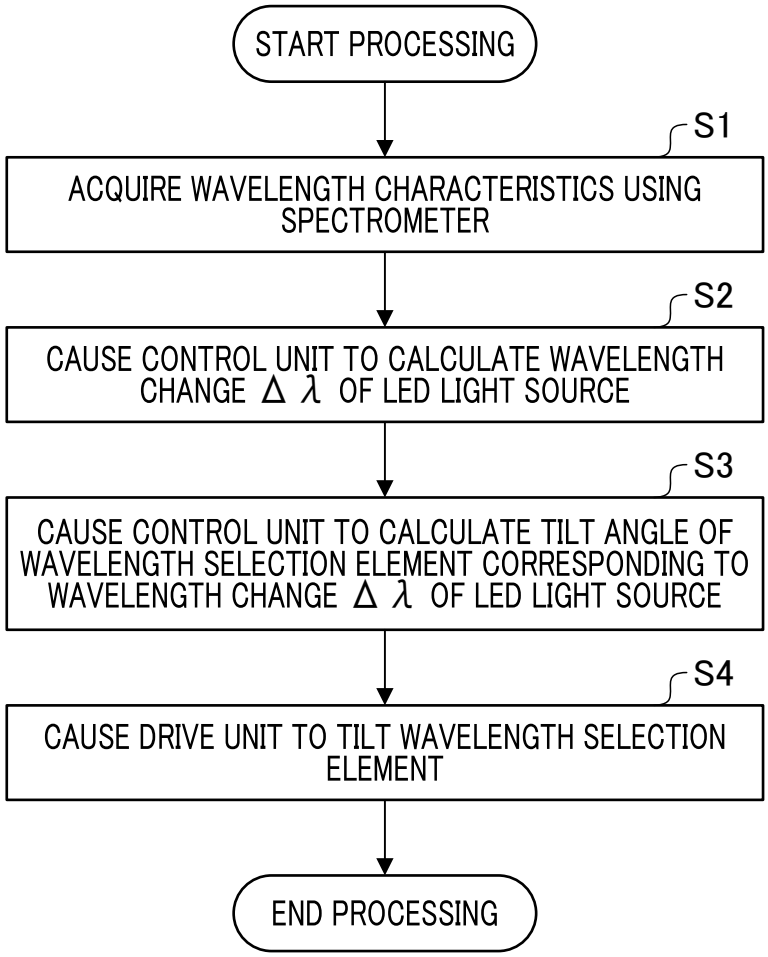
START PROCESSING
S1
ACQUIRE WAVELENGTH CHARACTERISTICS USING SPECTROMETER
S2
CAUSE CONTROL UNIT TO CALCULATE WAVELENGTH CHANGE Δλ OF LED LIGHT SOURCE
S3
CAUSE CONTROL UNIT TO CALCULATE TILT ANGLE OF WAVELENGTH SELECTION ELEMENT CORRESPONDING TO WAVELENGTH CHANGE Δλ OF LED LIGHT SOURCE
S4
CAUSE DRIVE UNIT TO TILT WAVELENGTH SELECTION ELEMENT
END PROCESSING

FIG. 6

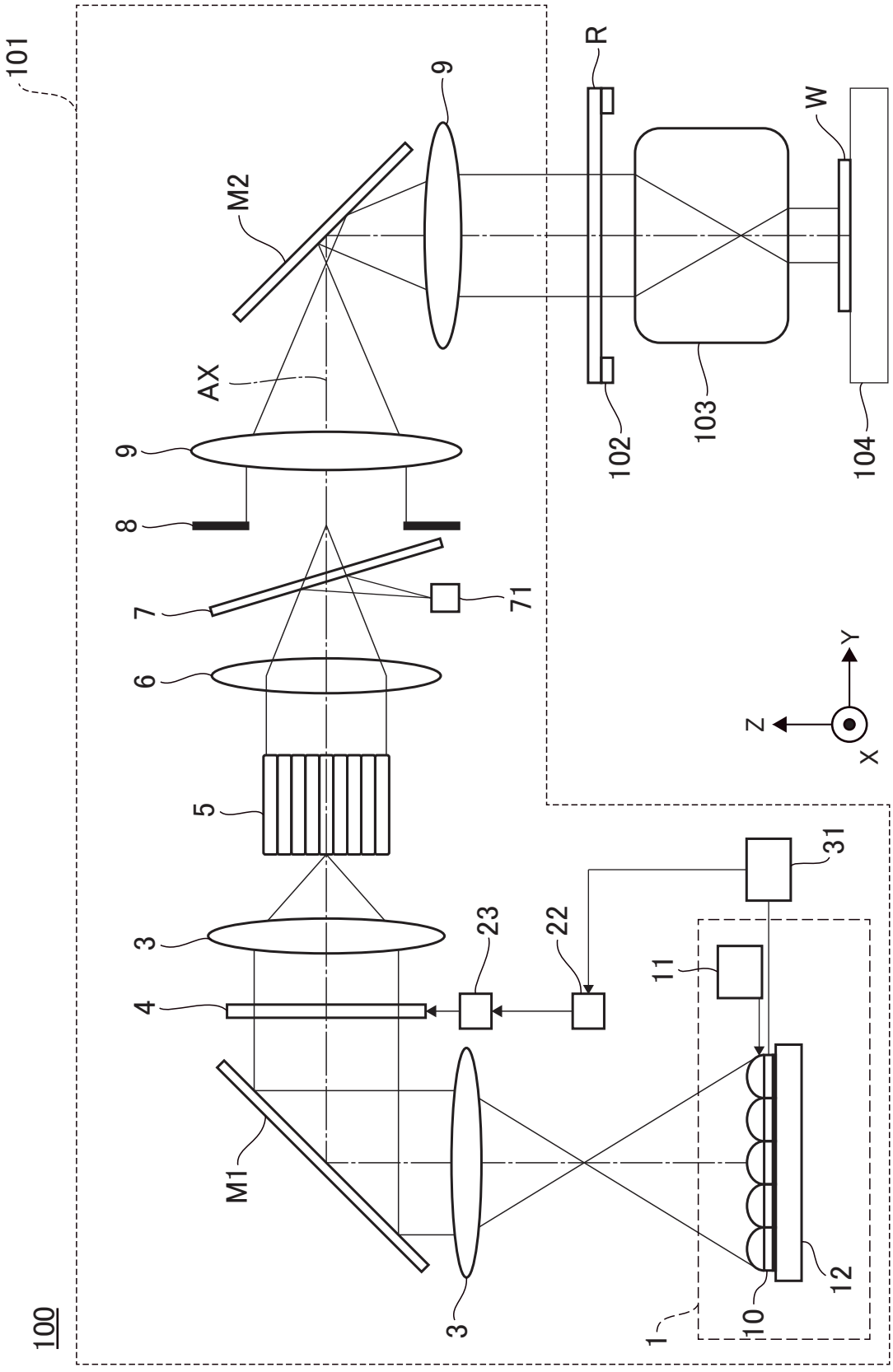

FIG. 7

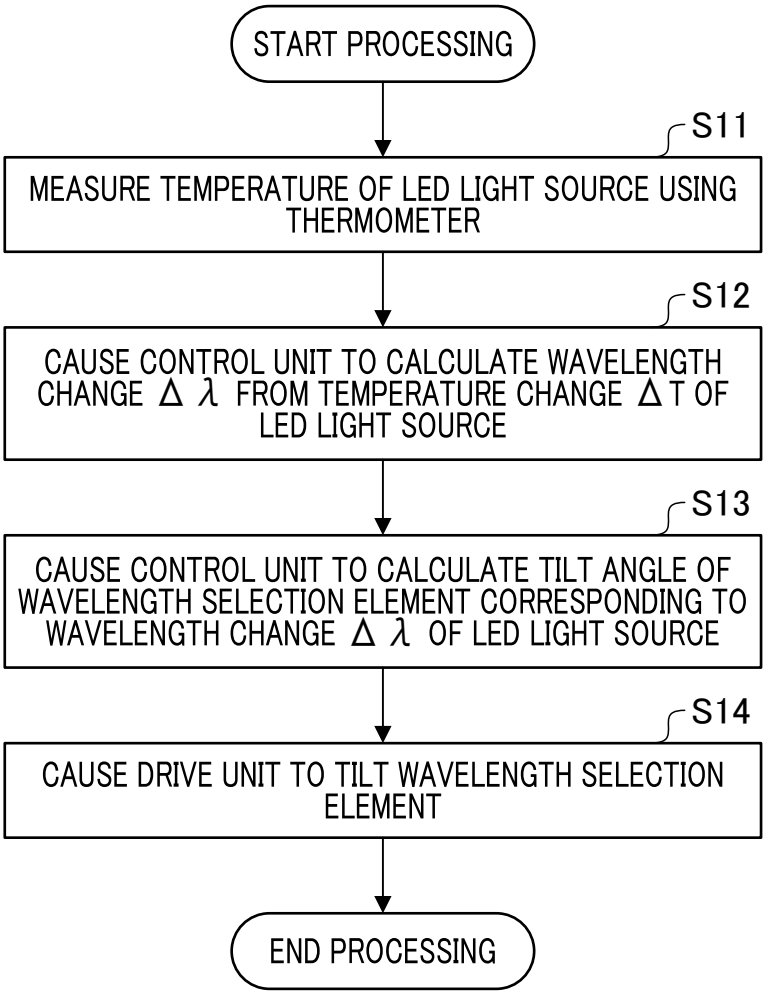
START PROCESSING
S11
MEASURE TEMPERATURE OF LED LIGHT SOURCE USING THERMOMETER
S12
CAUSE CONTROL UNIT TO CALCULATE WAVELENGTH CHANGE Δλ FROM TEMPERATURE CHANGE ΔT OF LED LIGHT SOURCE
S13
CAUSE CONTROL UNIT TO CALCULATE TILT ANGLE OF WAVELENGTH SELECTION ELEMENT CORRESPONDING TO WAVELENGTH CHANGE Δλ OF LED LIGHT SOURCE
S14
CAUSE DRIVE UNIT TO TILT WAVELENGTH SELECTION ELEMENT
END PROCESSING

FIG. 8

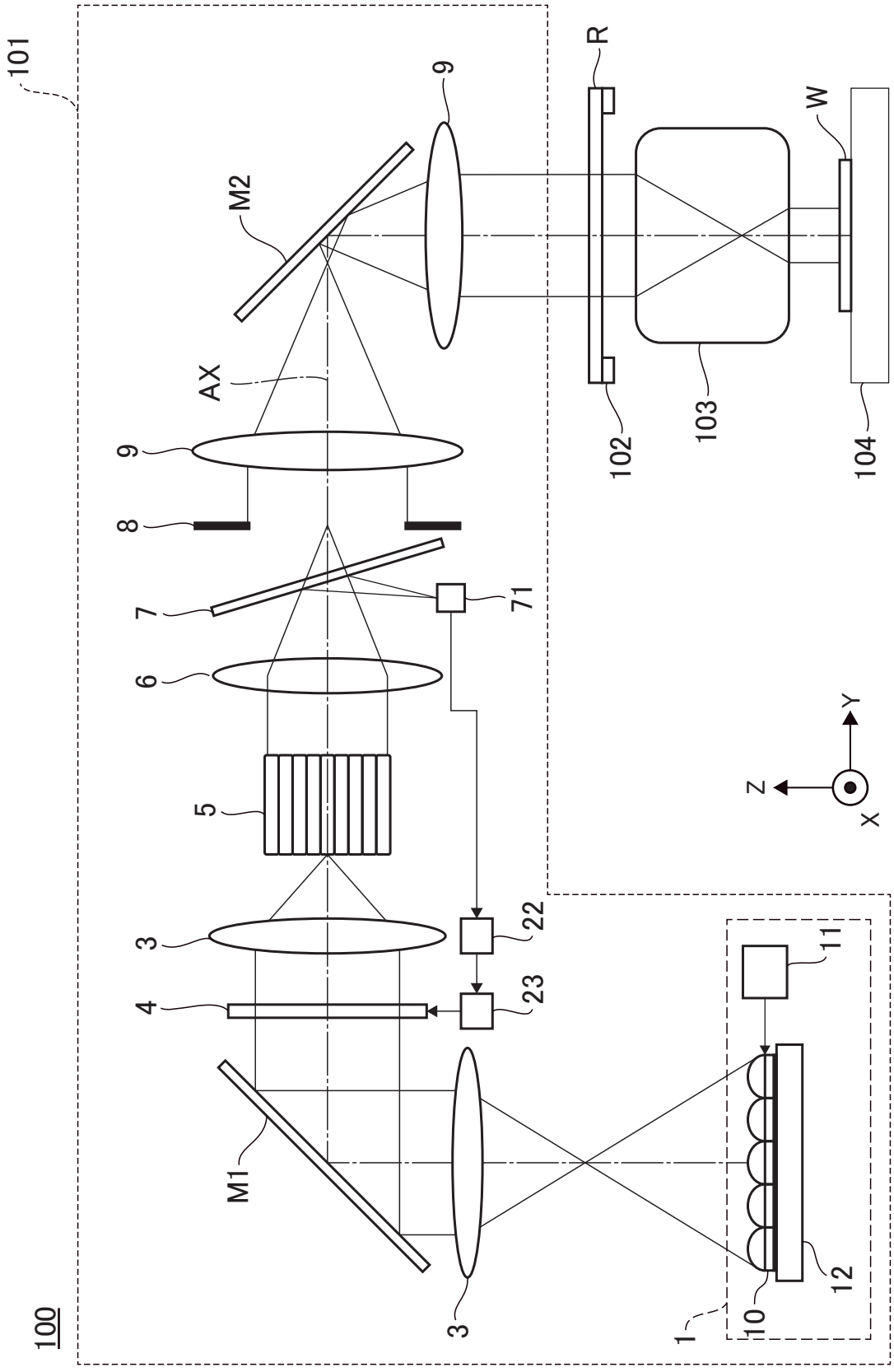

FIG. 9

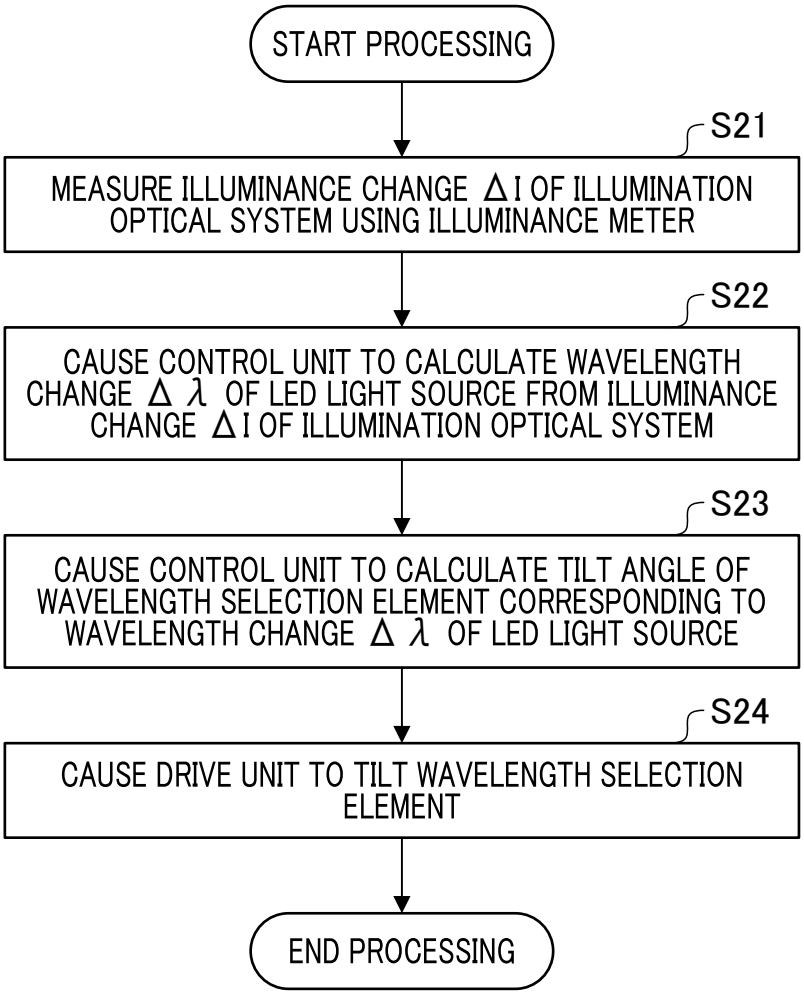
START PROCESSING
S21
MEASURE ILLUMINANCE CHANGE ΔI OF ILLUMINATION OPTICAL SYSTEM USING ILLUMINANCE METER
S22
CAUSE CONTROL UNIT TO CALCULATE WAVELENGTH CHANGE Δλ OF LED LIGHT SOURCE FROM ILLUMINANCE CHANGE ΔI OF ILLUMINATION OPTICAL SYSTEM
S23
CAUSE CONTROL UNIT TO CALCULATE TILT ANGLE OF WAVELENGTH SELECTION ELEMENT CORRESPONDING TO WAVELENGTH CHANGE Δλ OF LED LIGHT SOURCE
S24
CAUSE DRIVE UNIT TO TILT WAVELENGTH SELECTION ELEMENT
END PROCESSING