[図1]

FIG.1

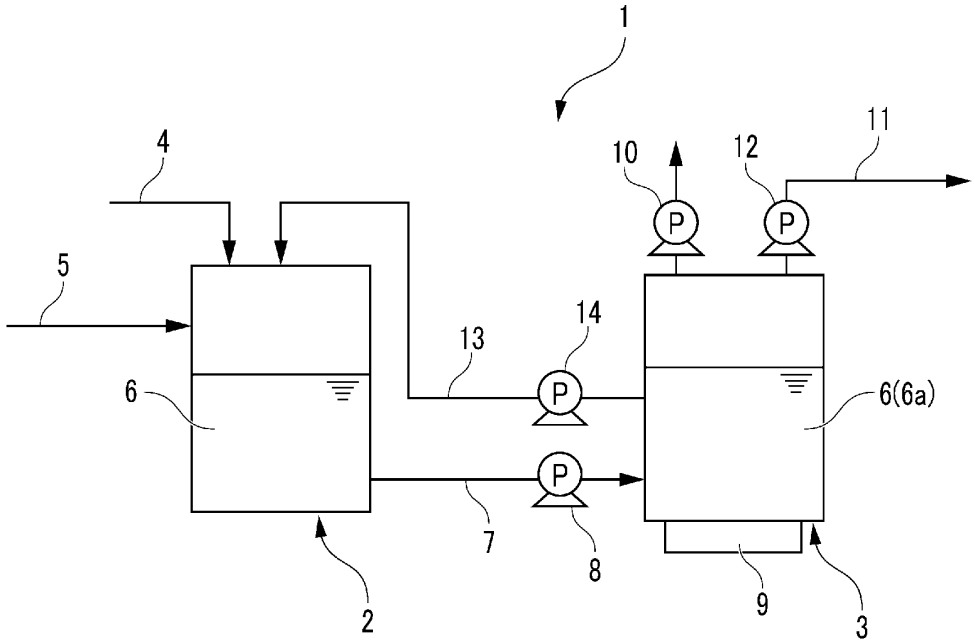

[図2]

FIG.2

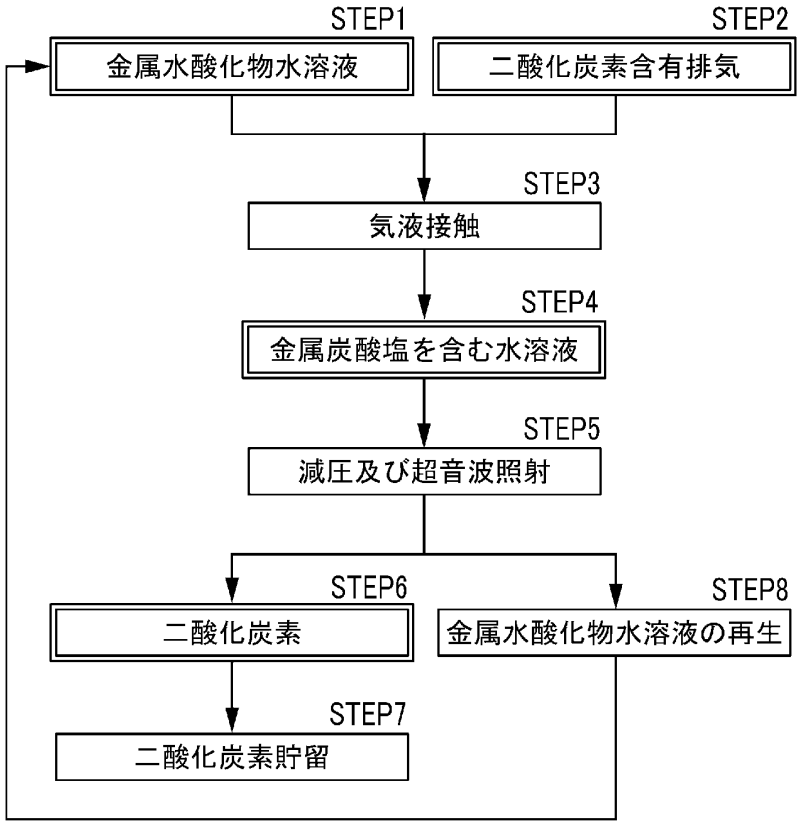

[図3]

FIG.3

