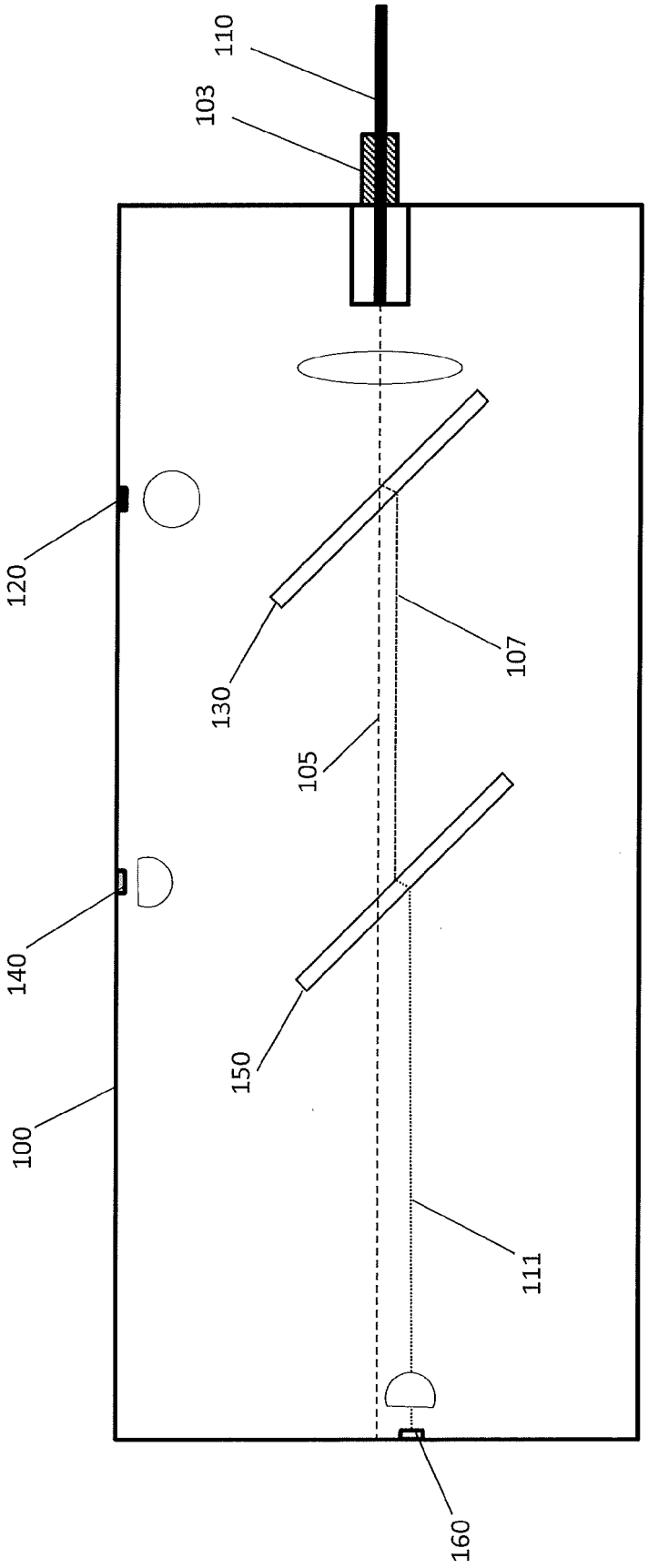

FIG. 1A

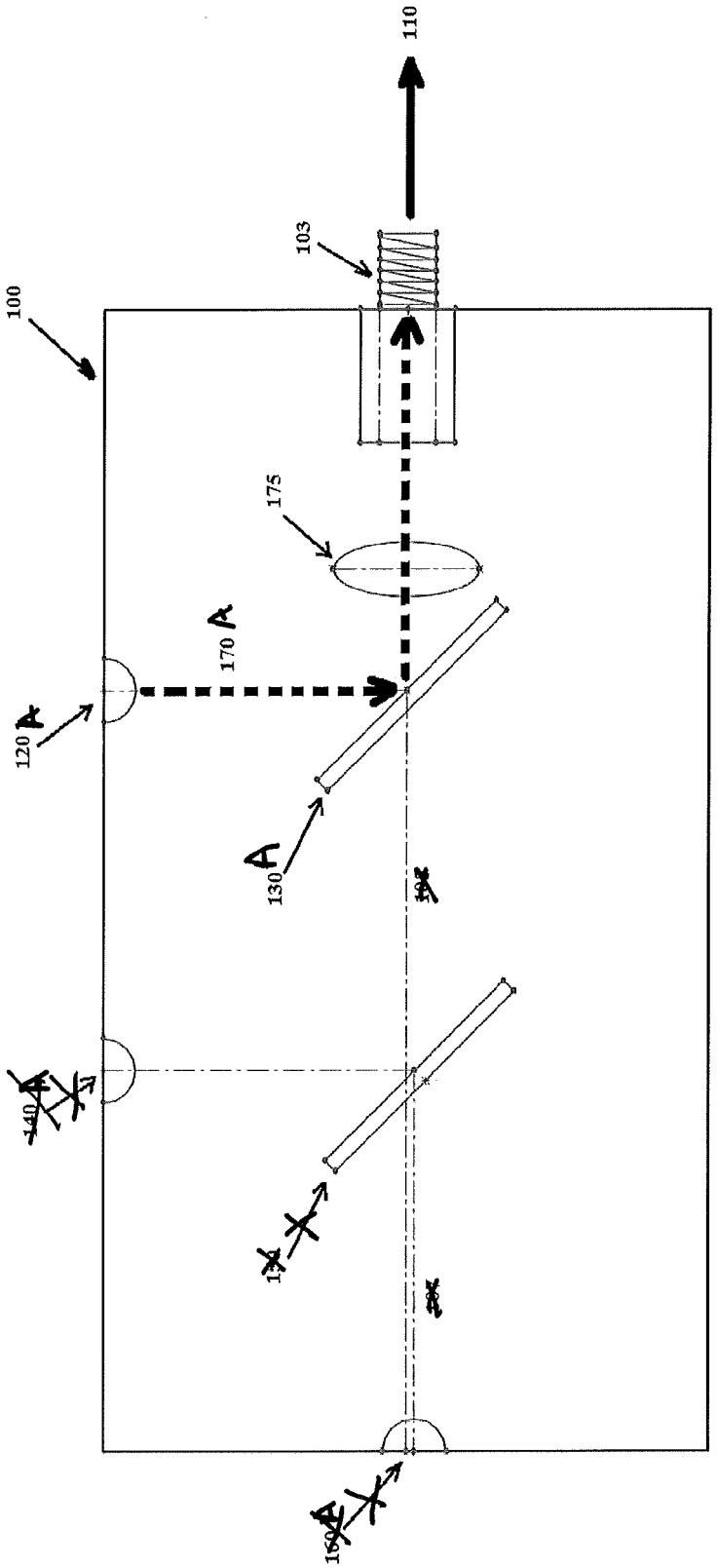

Figure 1b

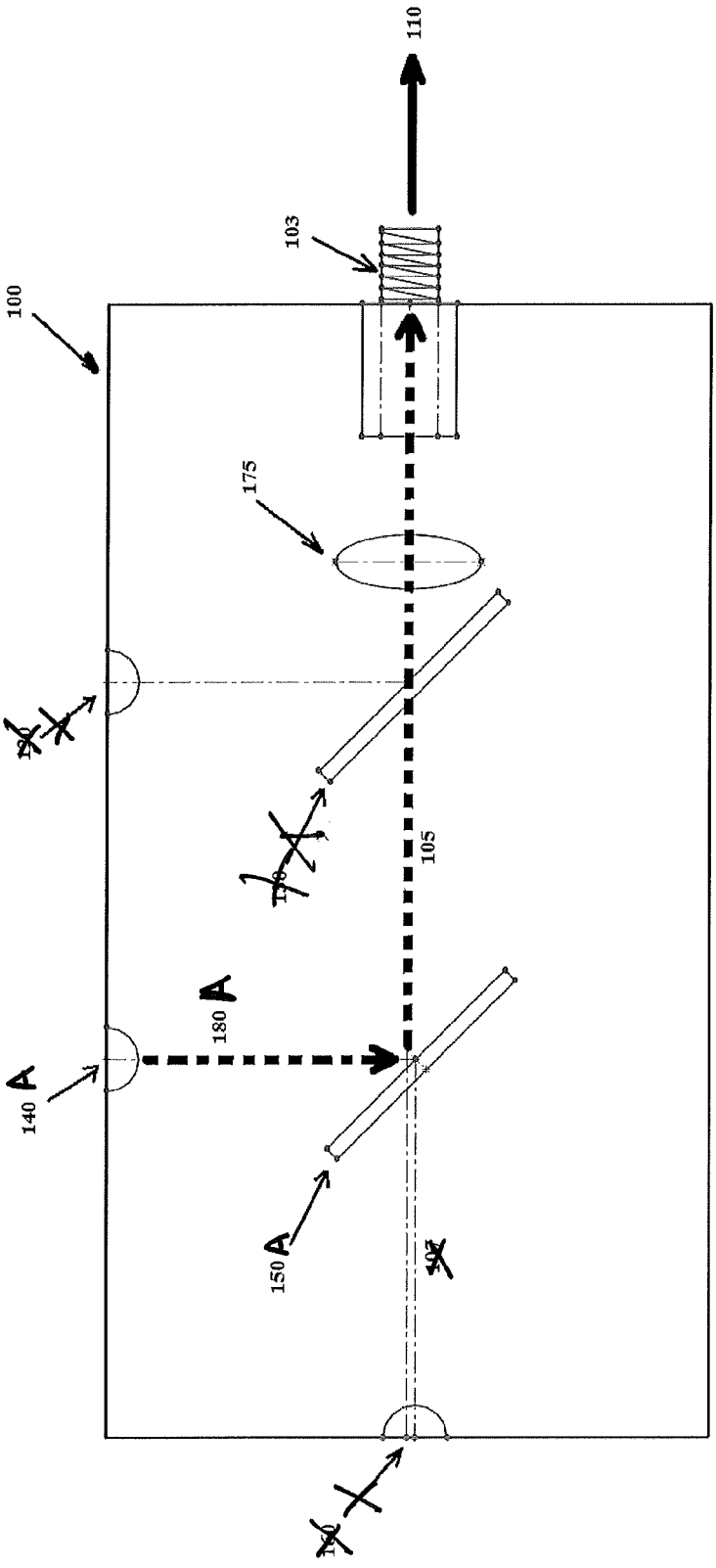

Figure 1c

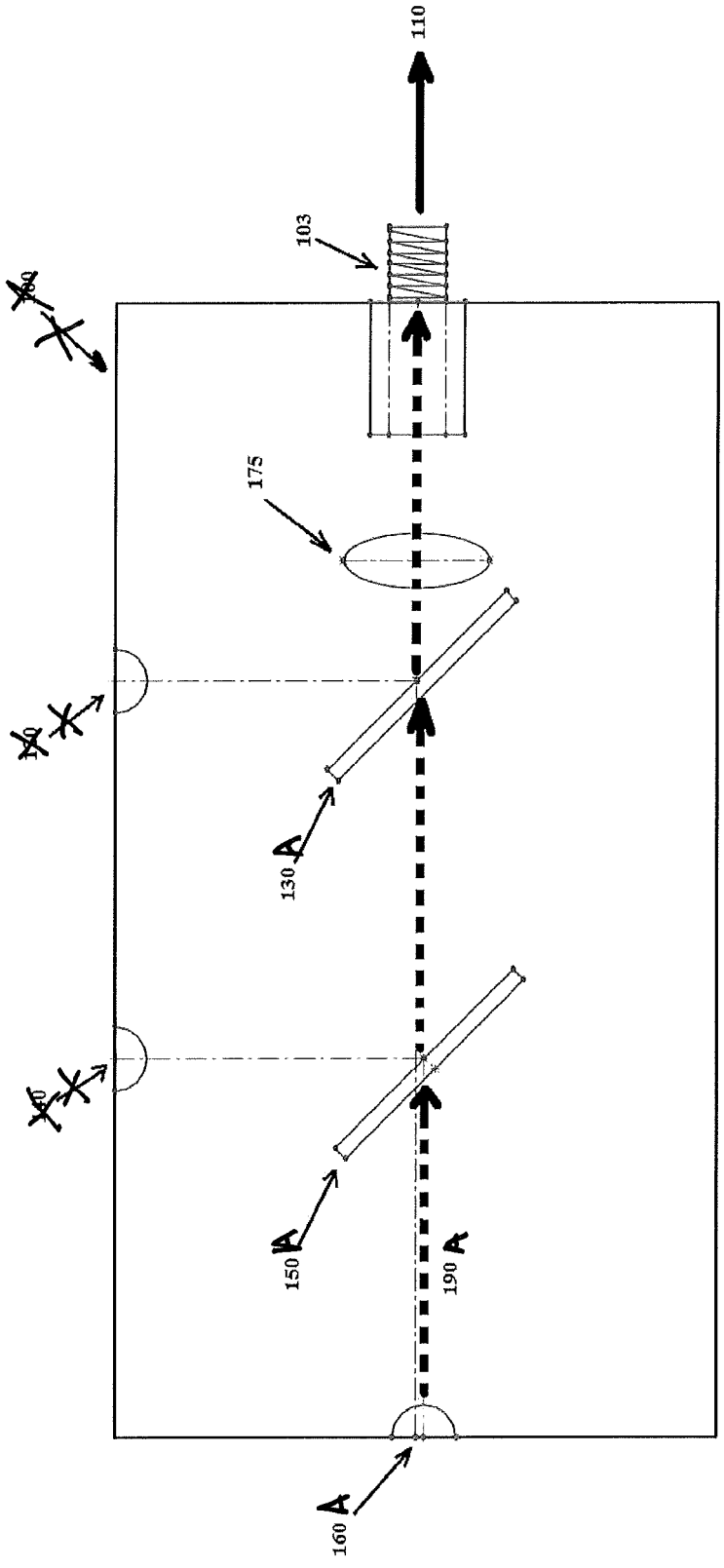

Figure 1d

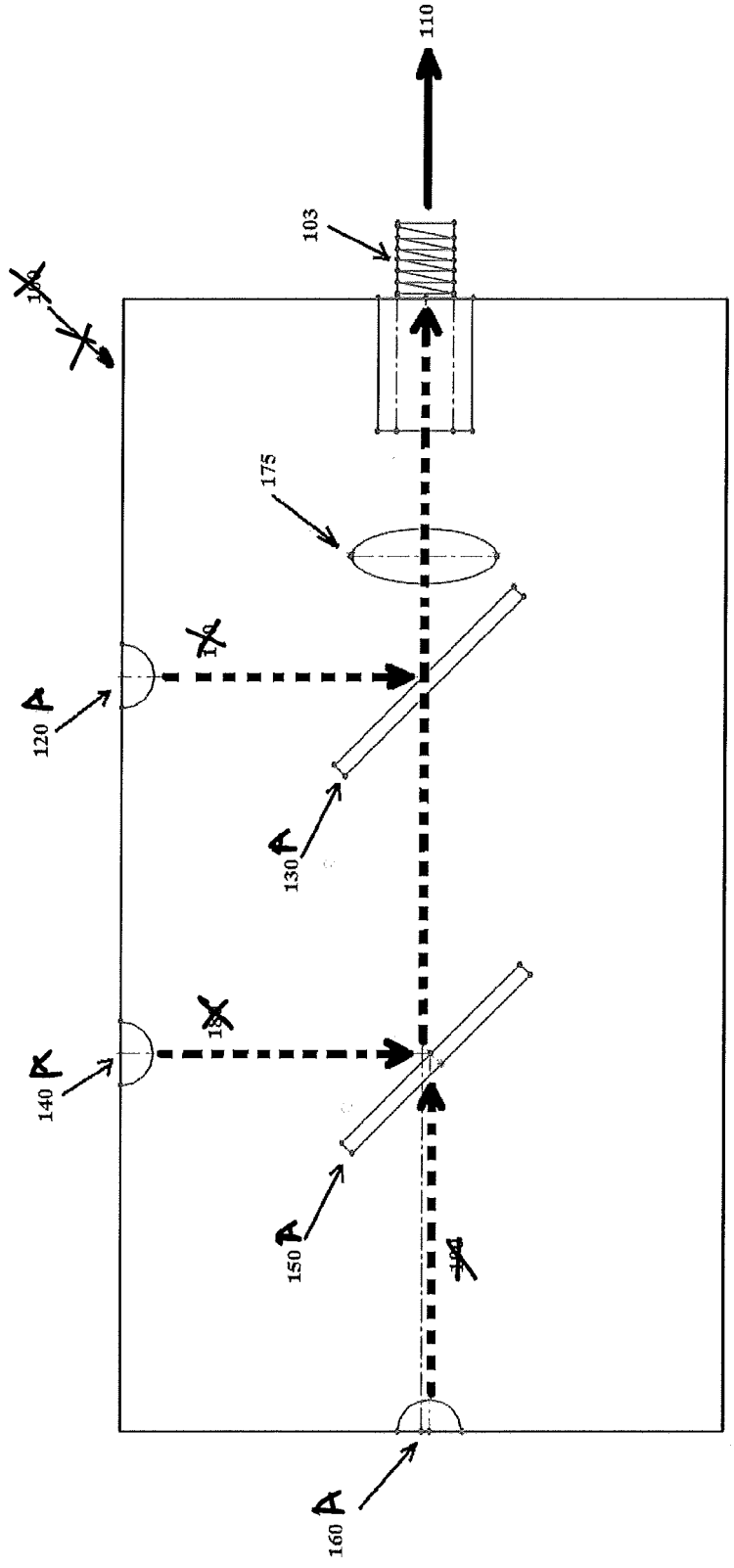

Figure 1e

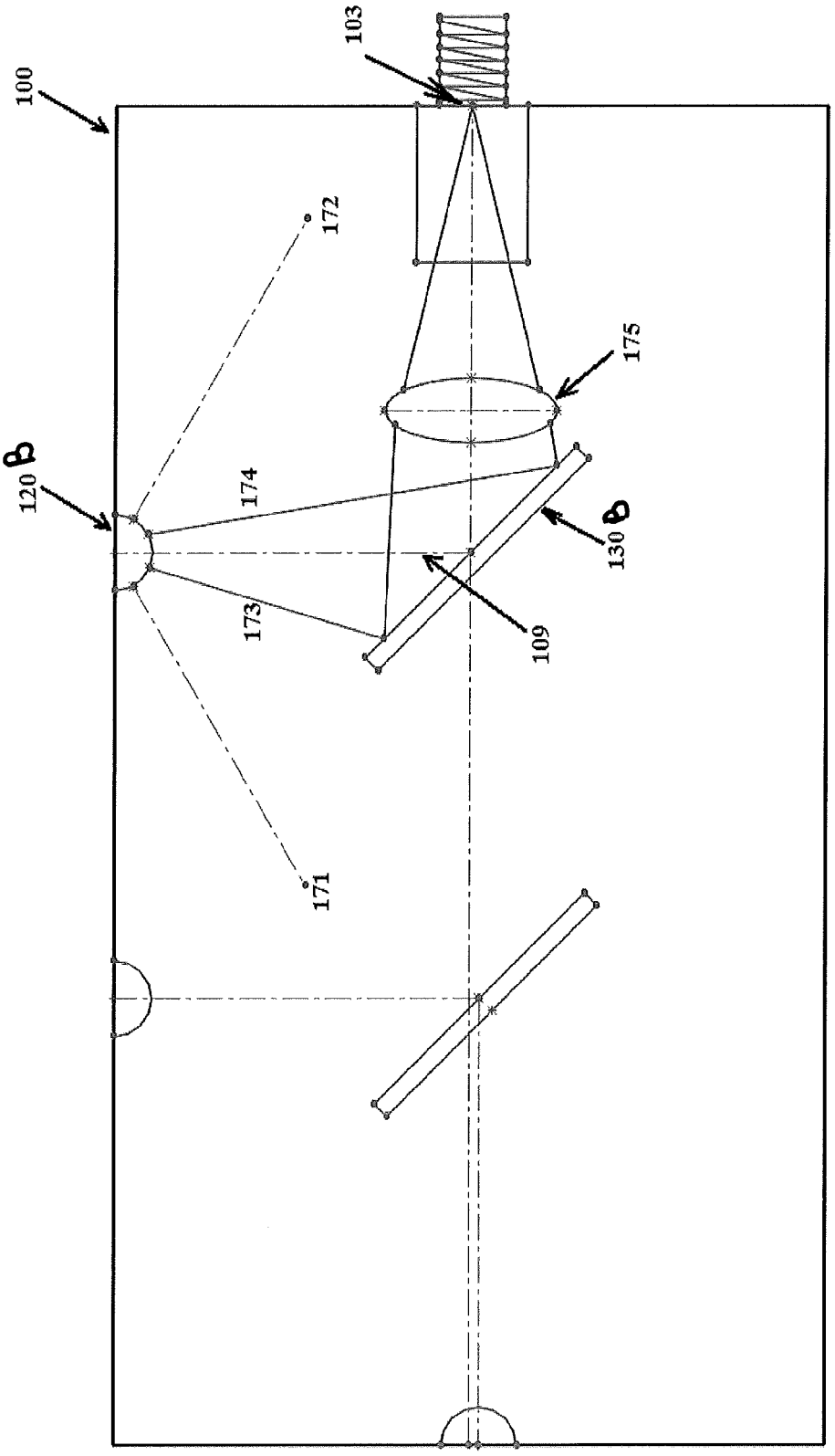

Figure 1f

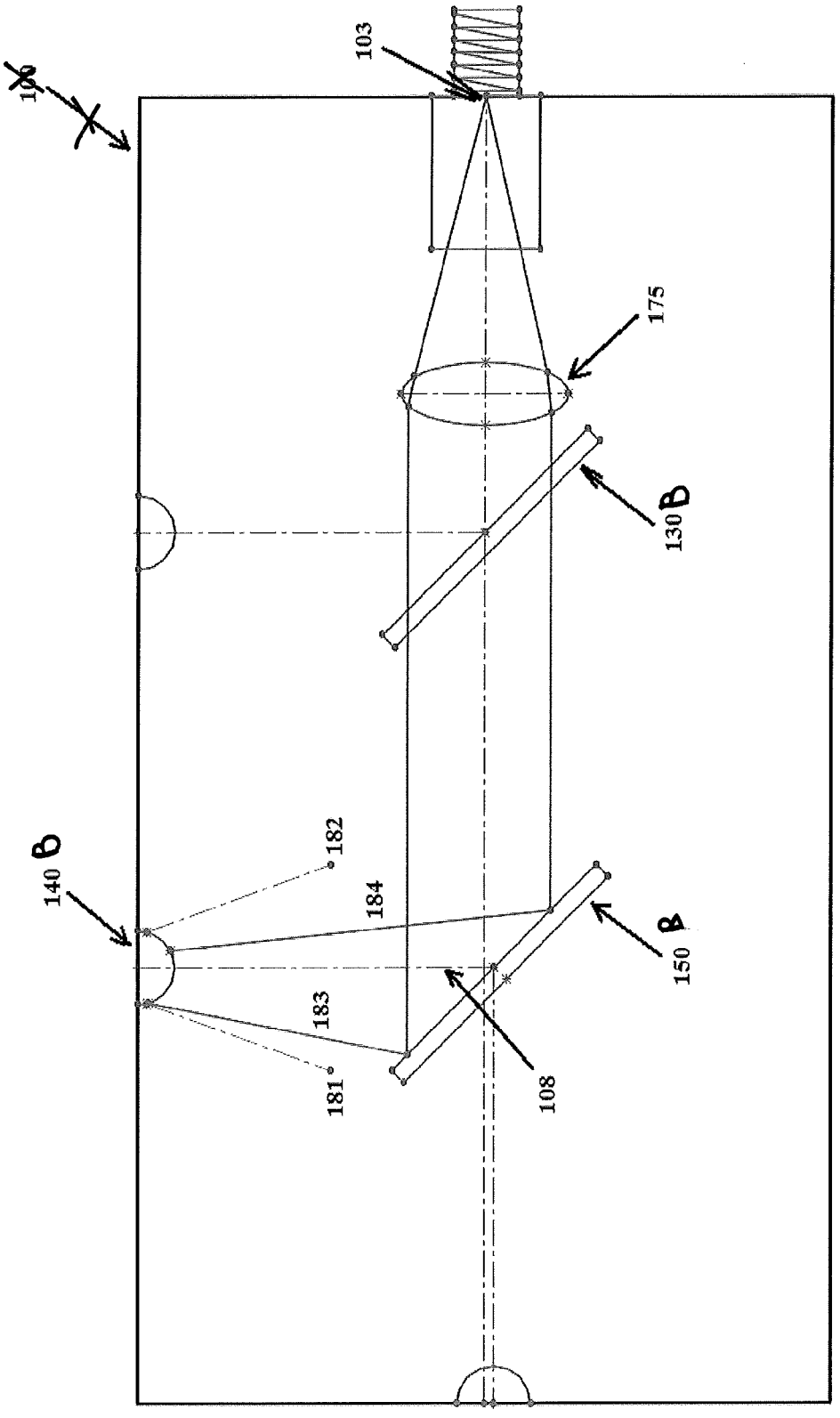

Figure 1g

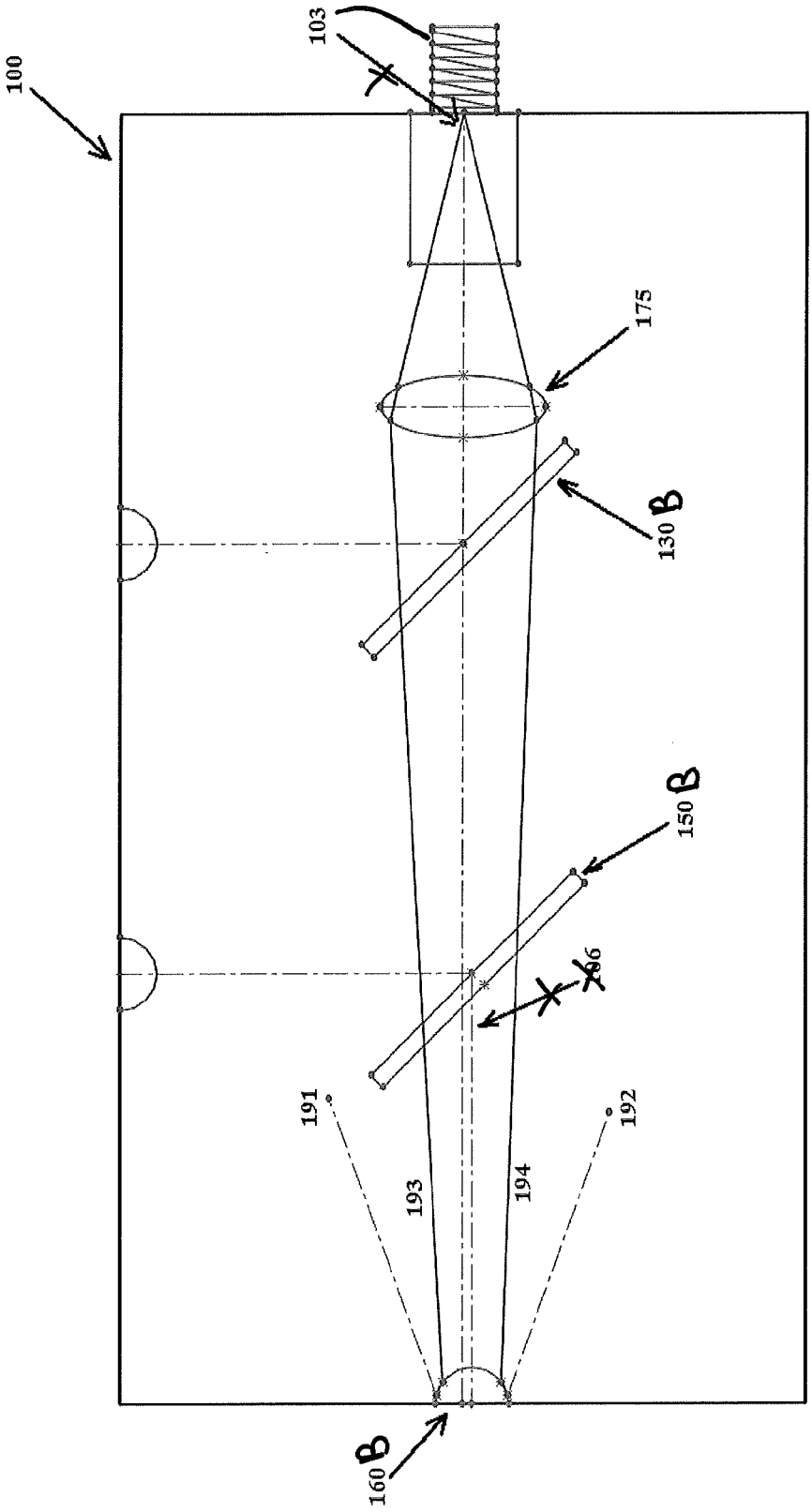

Figure 1h

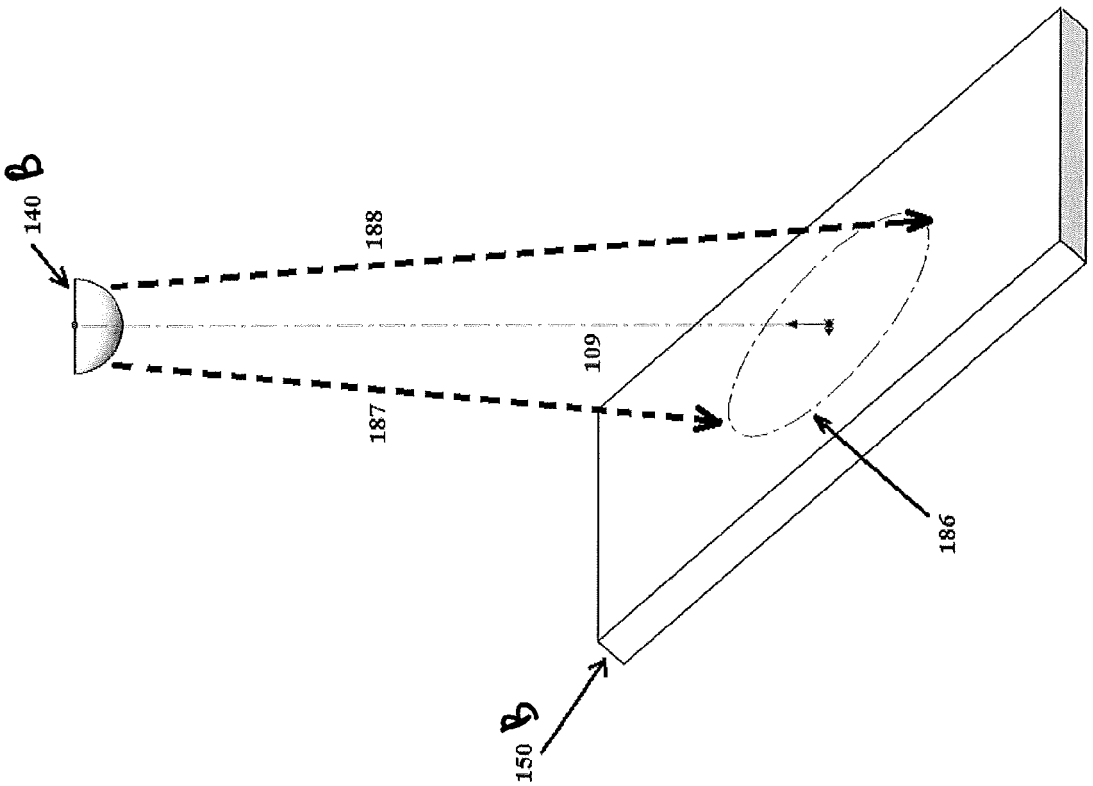

Figure 1i

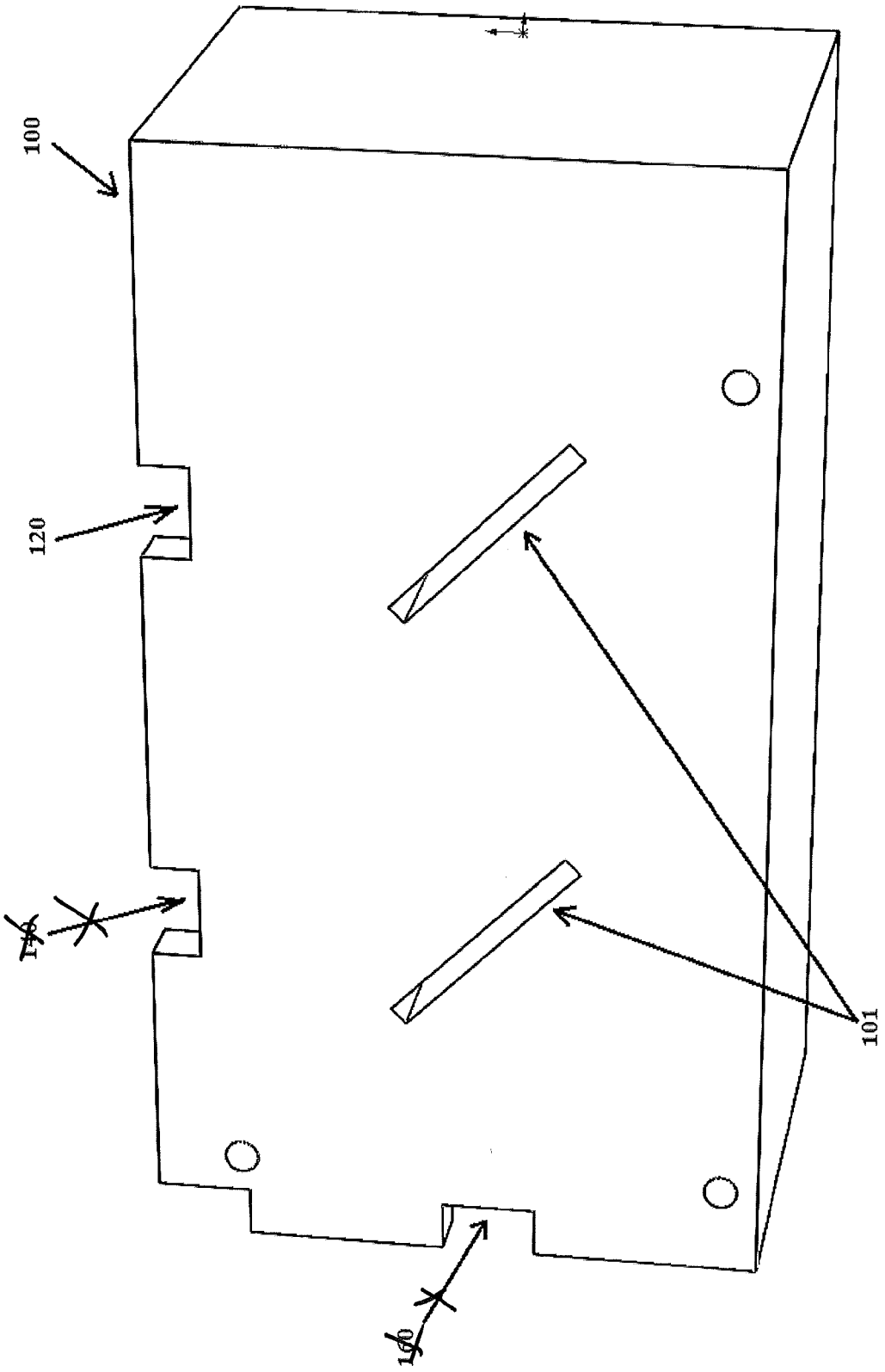

Figure 1j

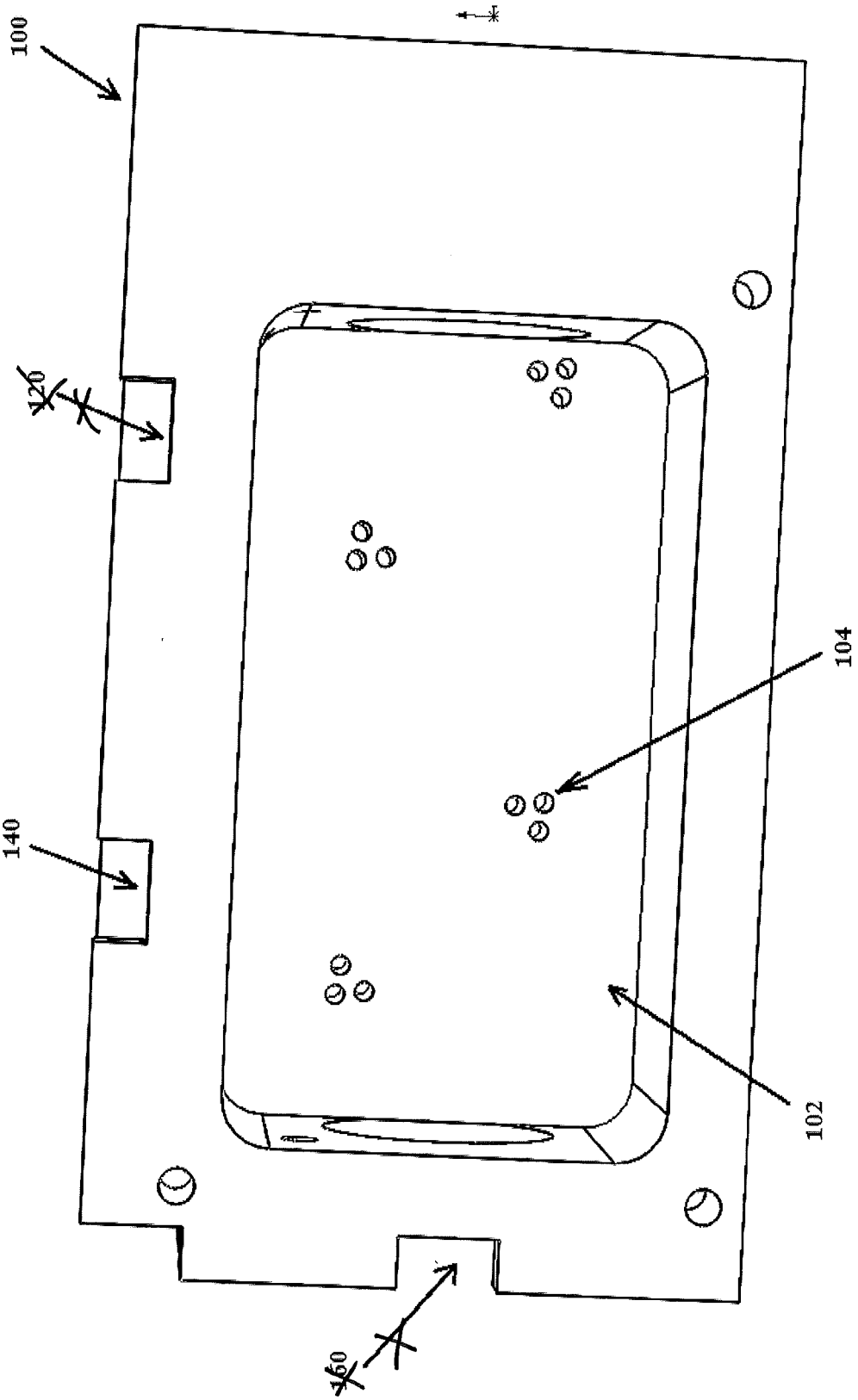

Figure 1k

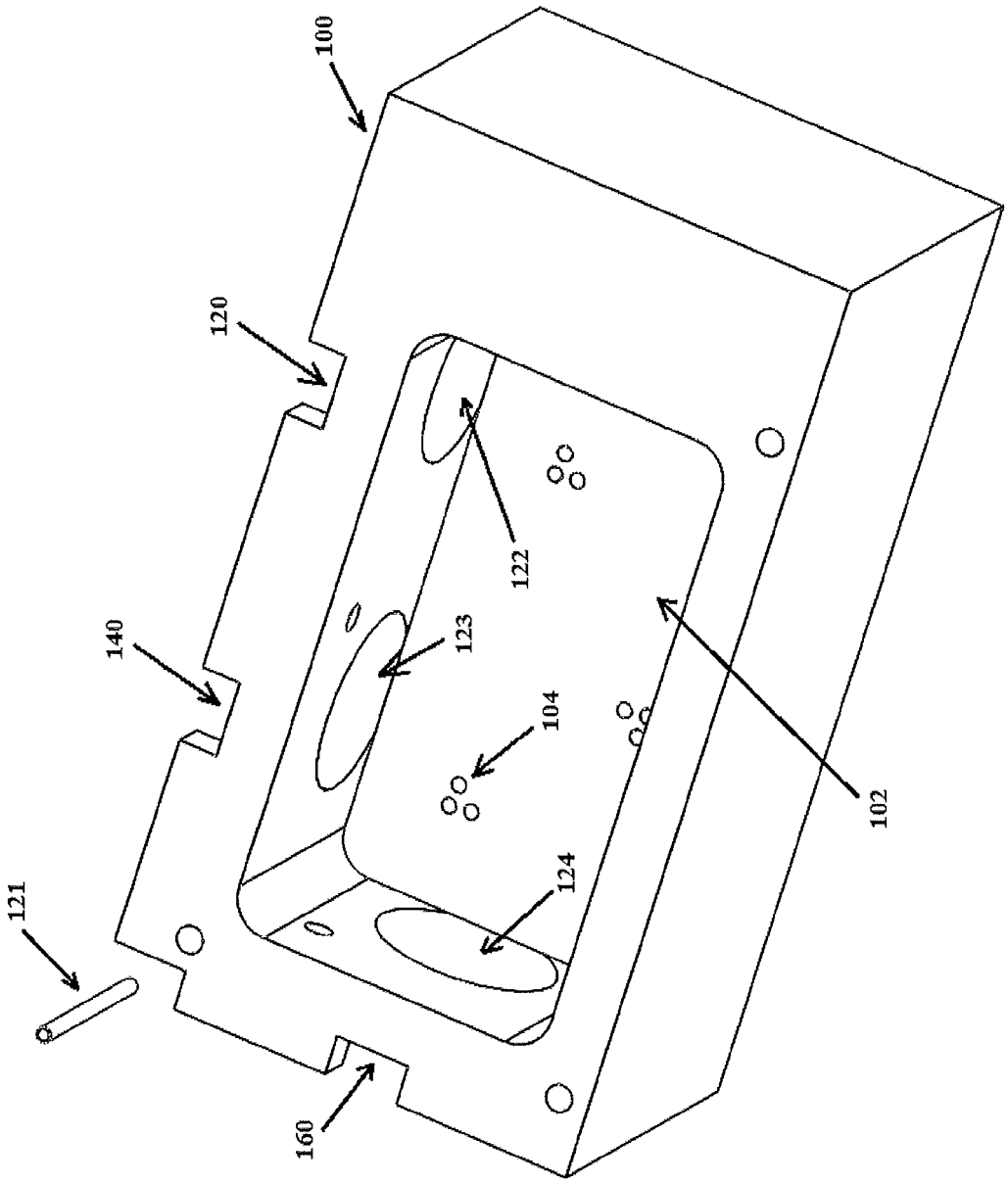

Figure 1L

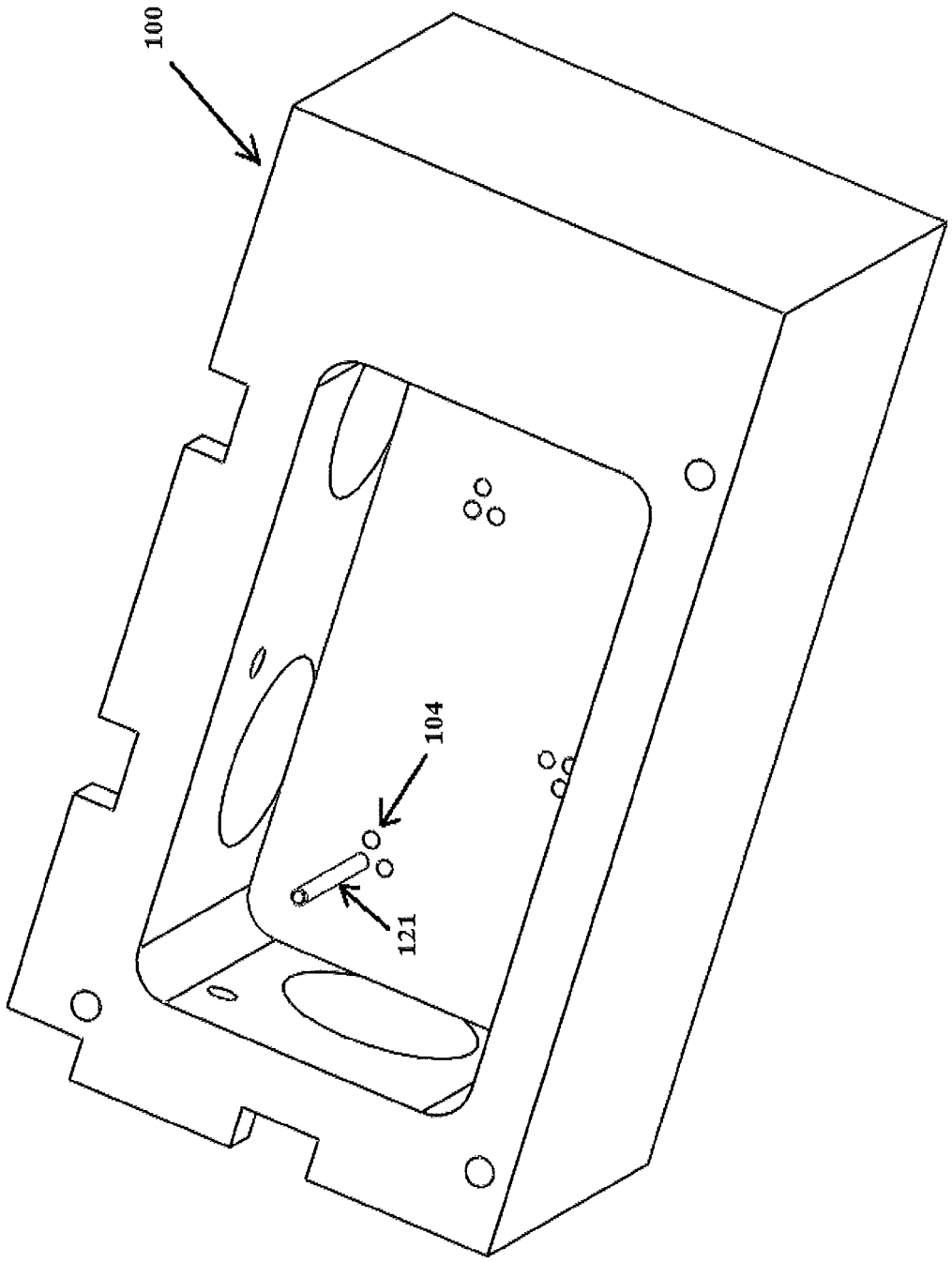

Figure 1m

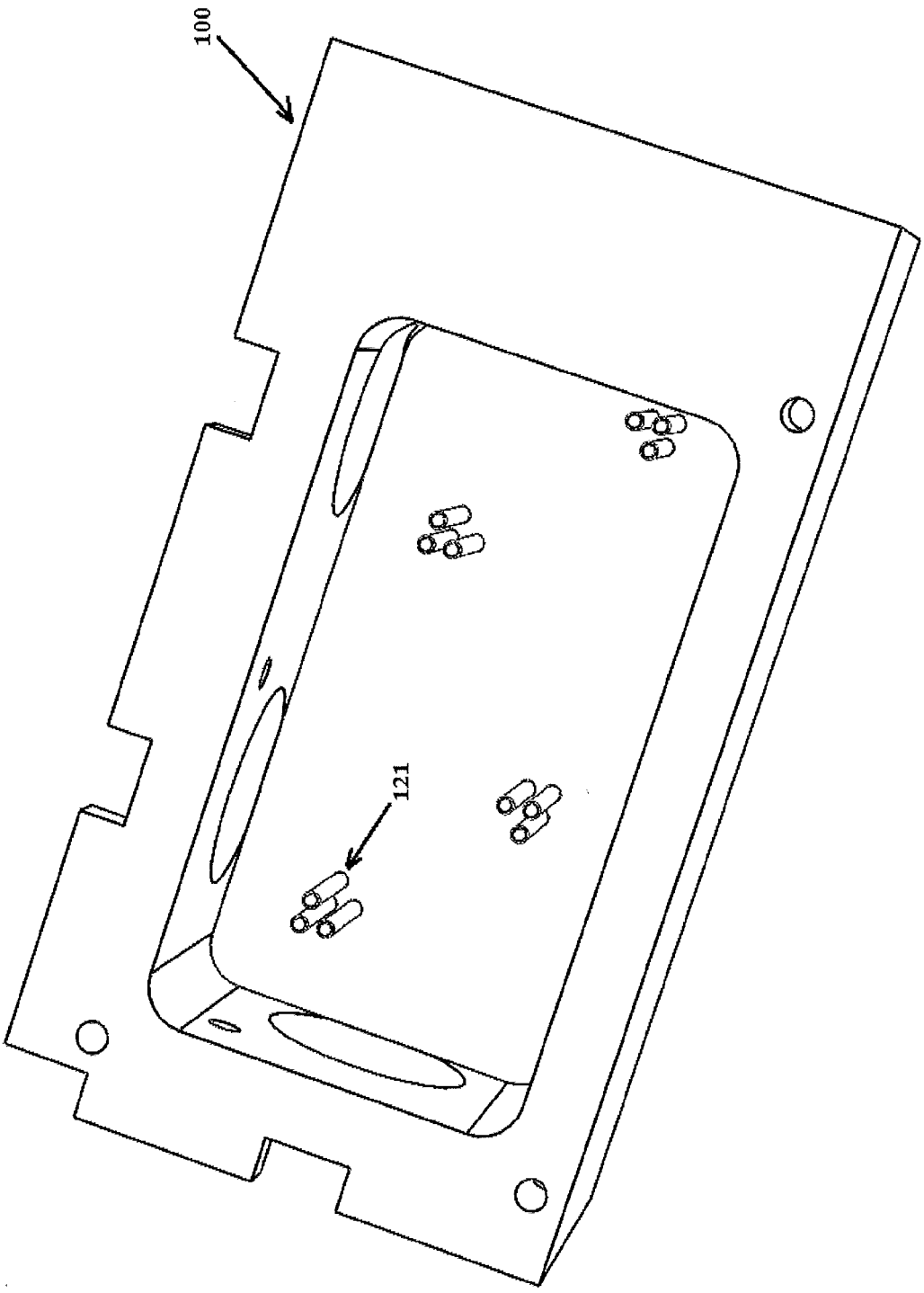

Figure 1n

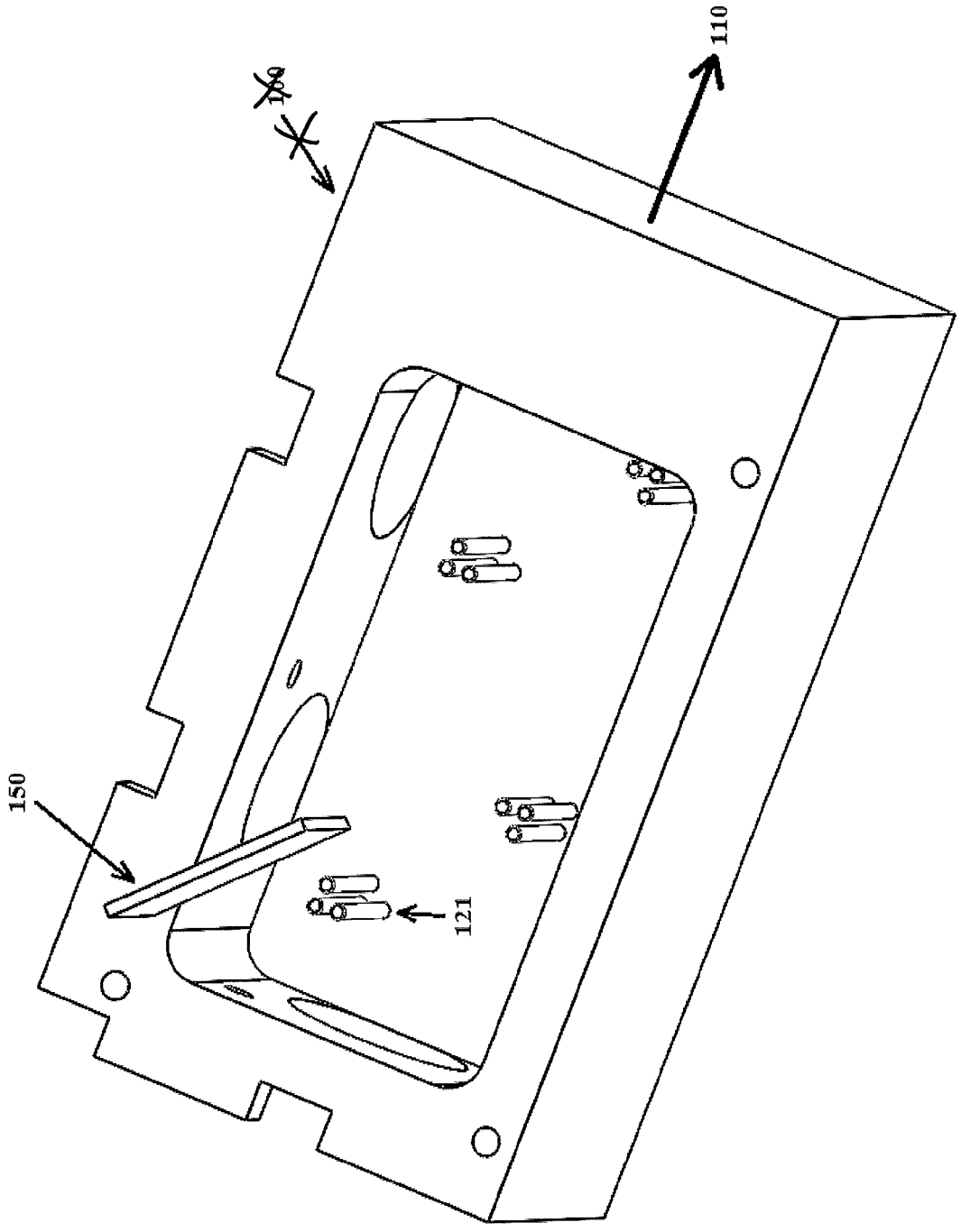

Figure 1o

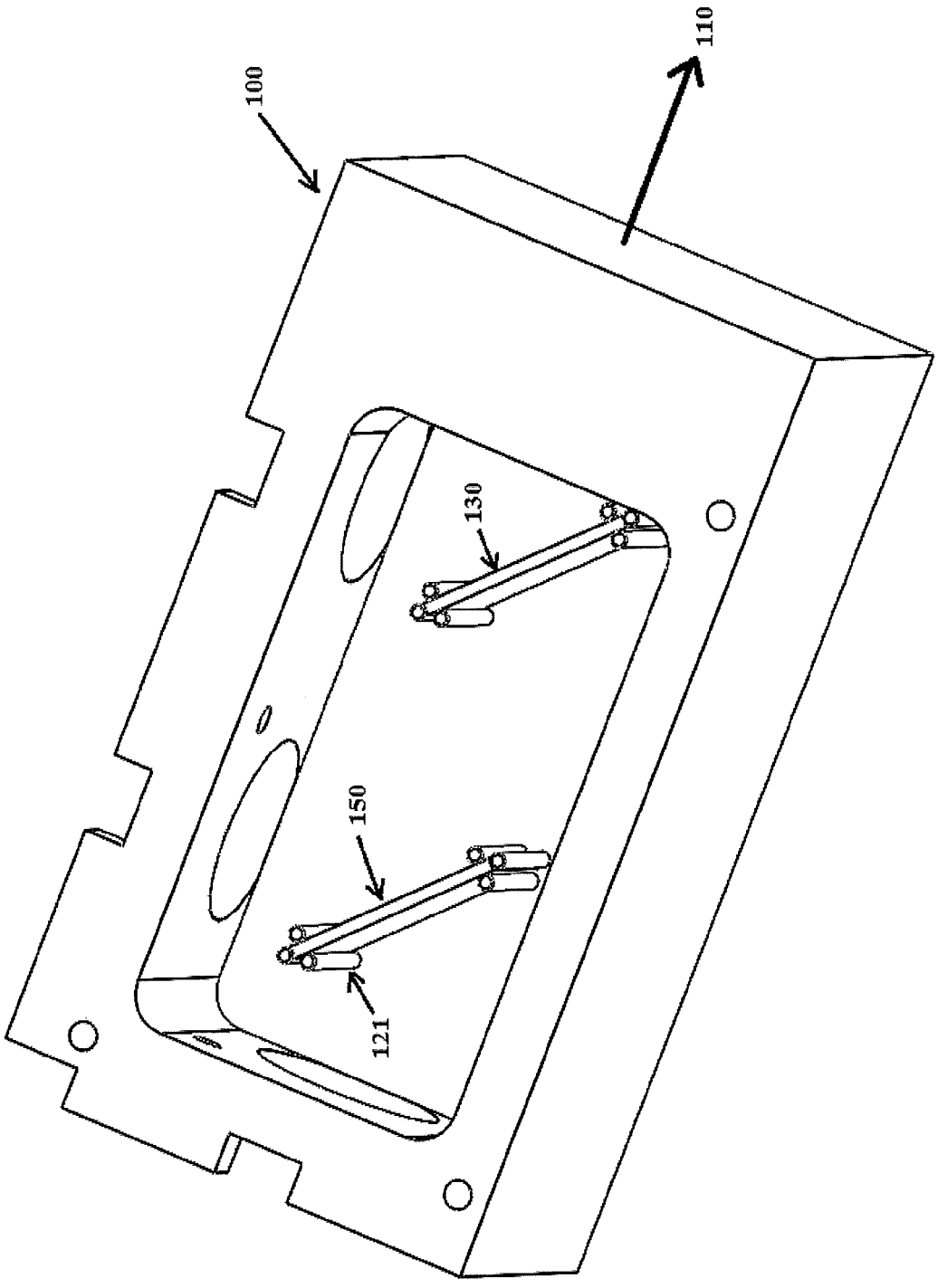

Figure 1p

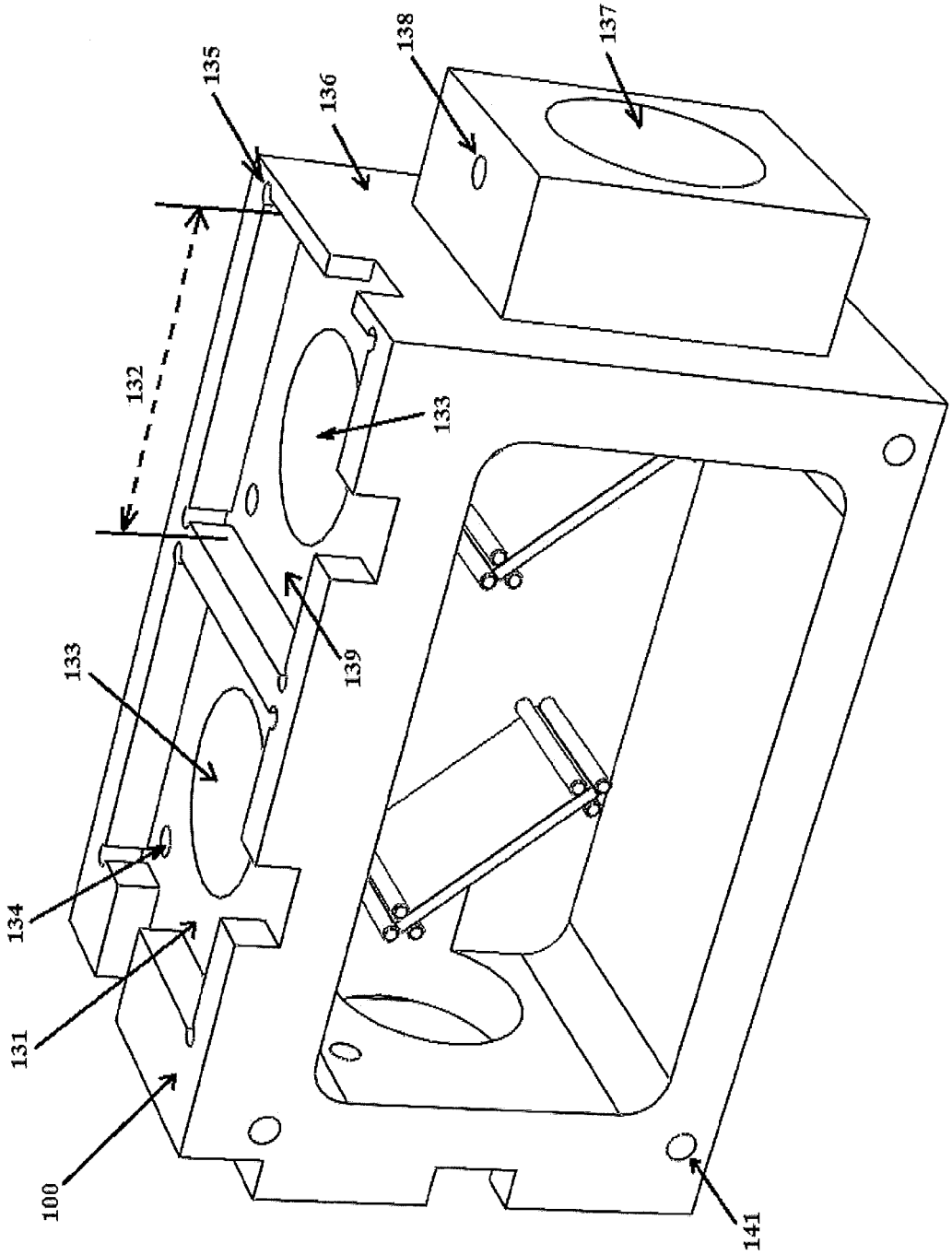

Figure 1g

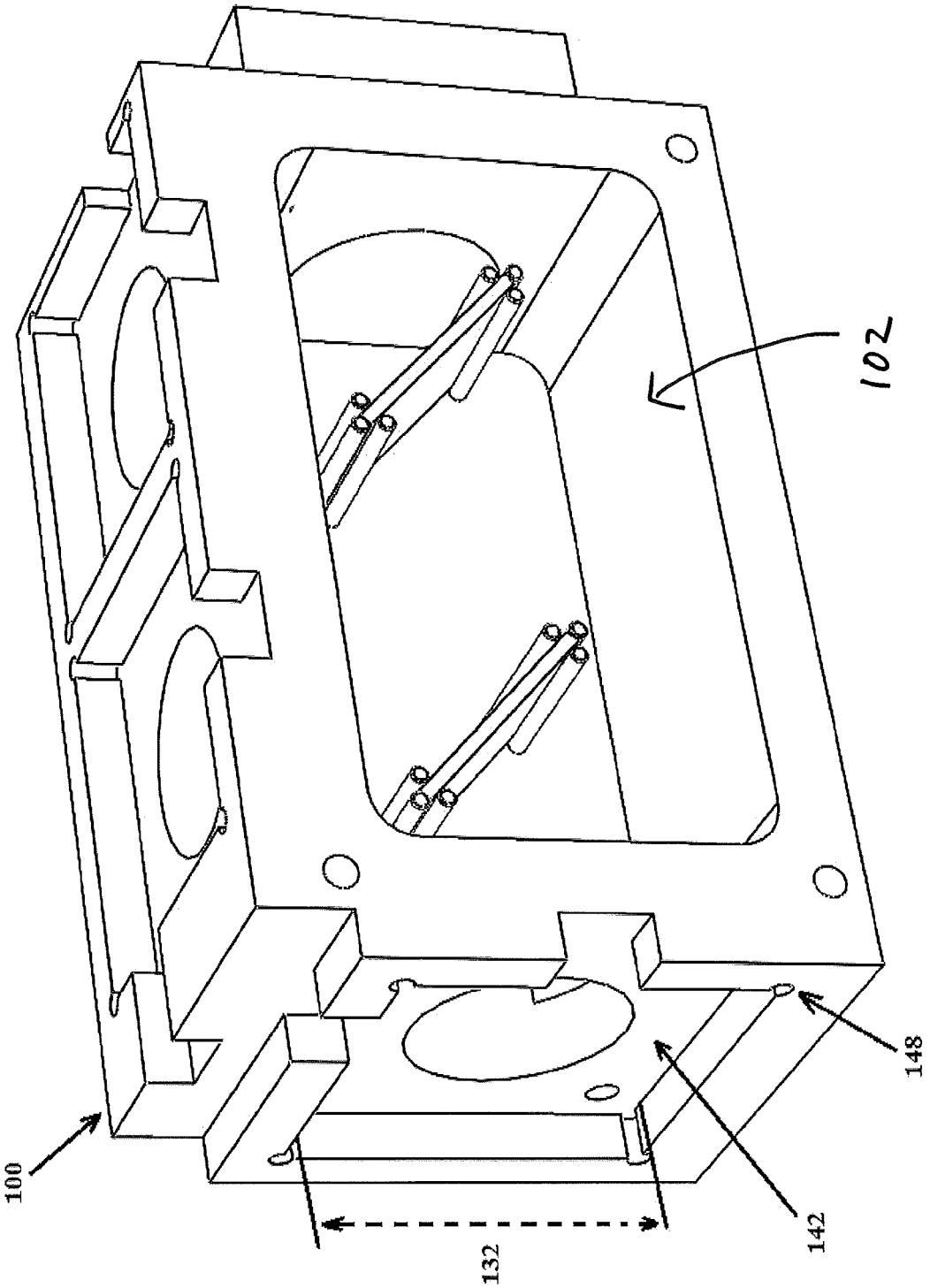

Figure 1r

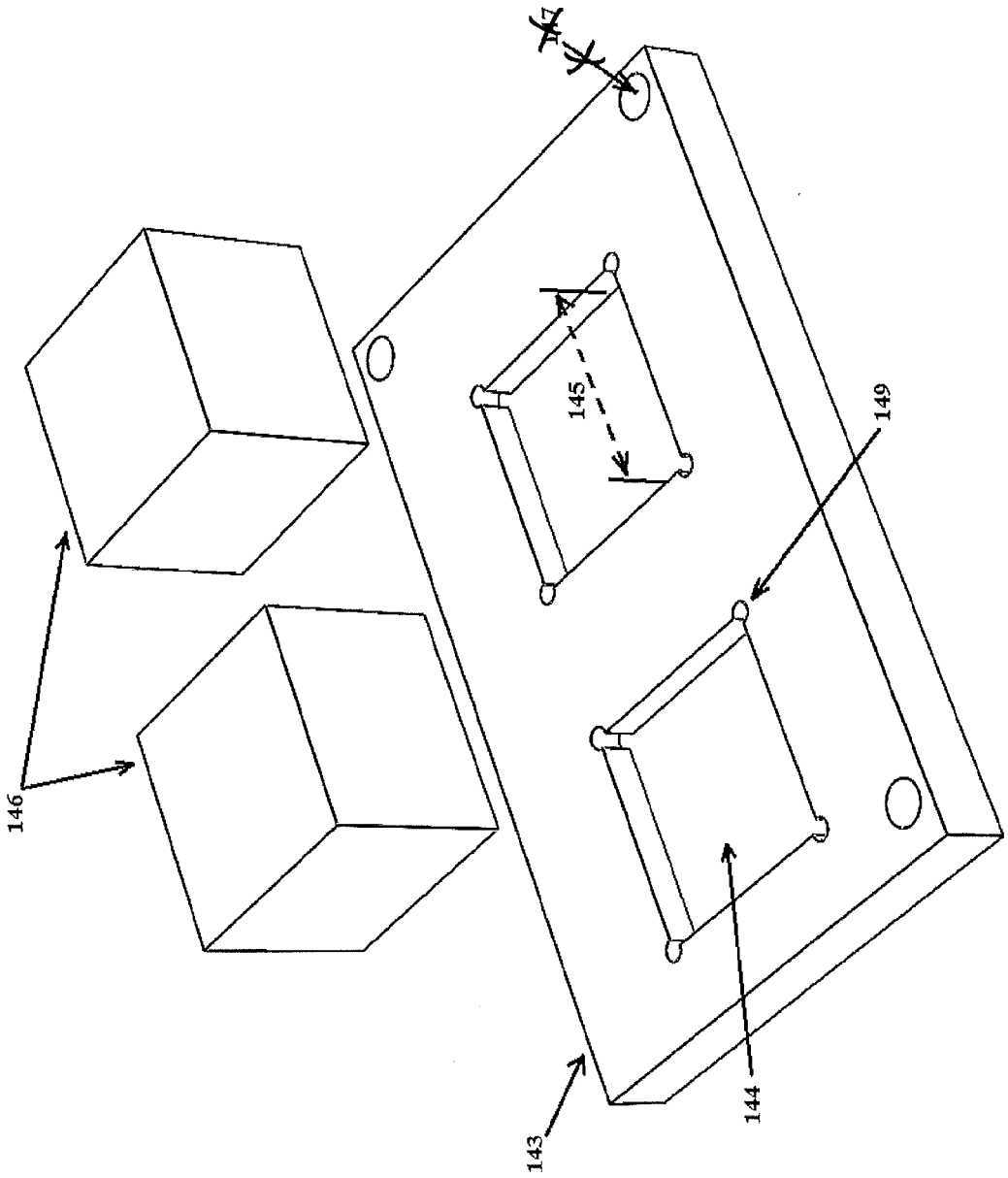

Figure 1s

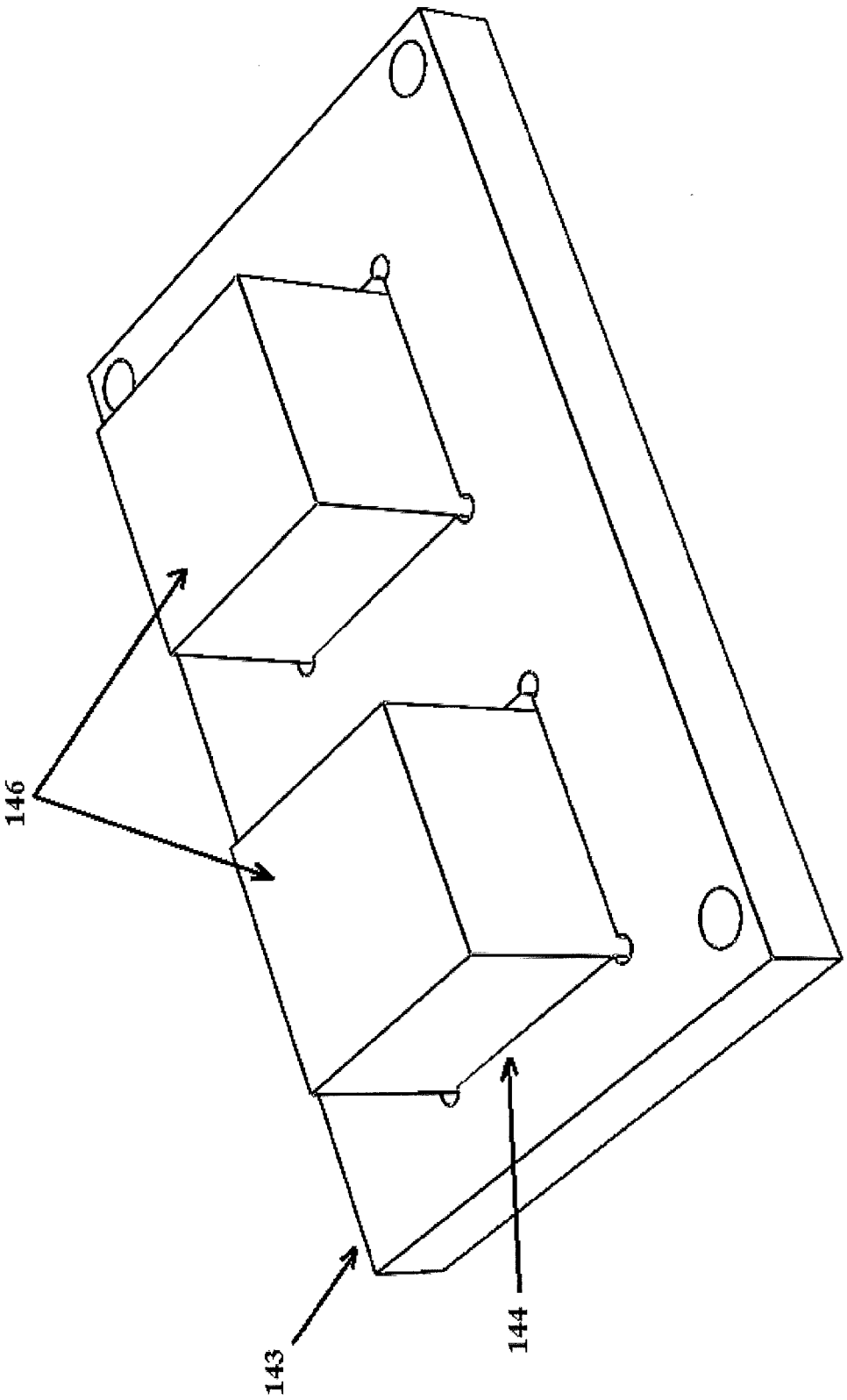

Figure 1t

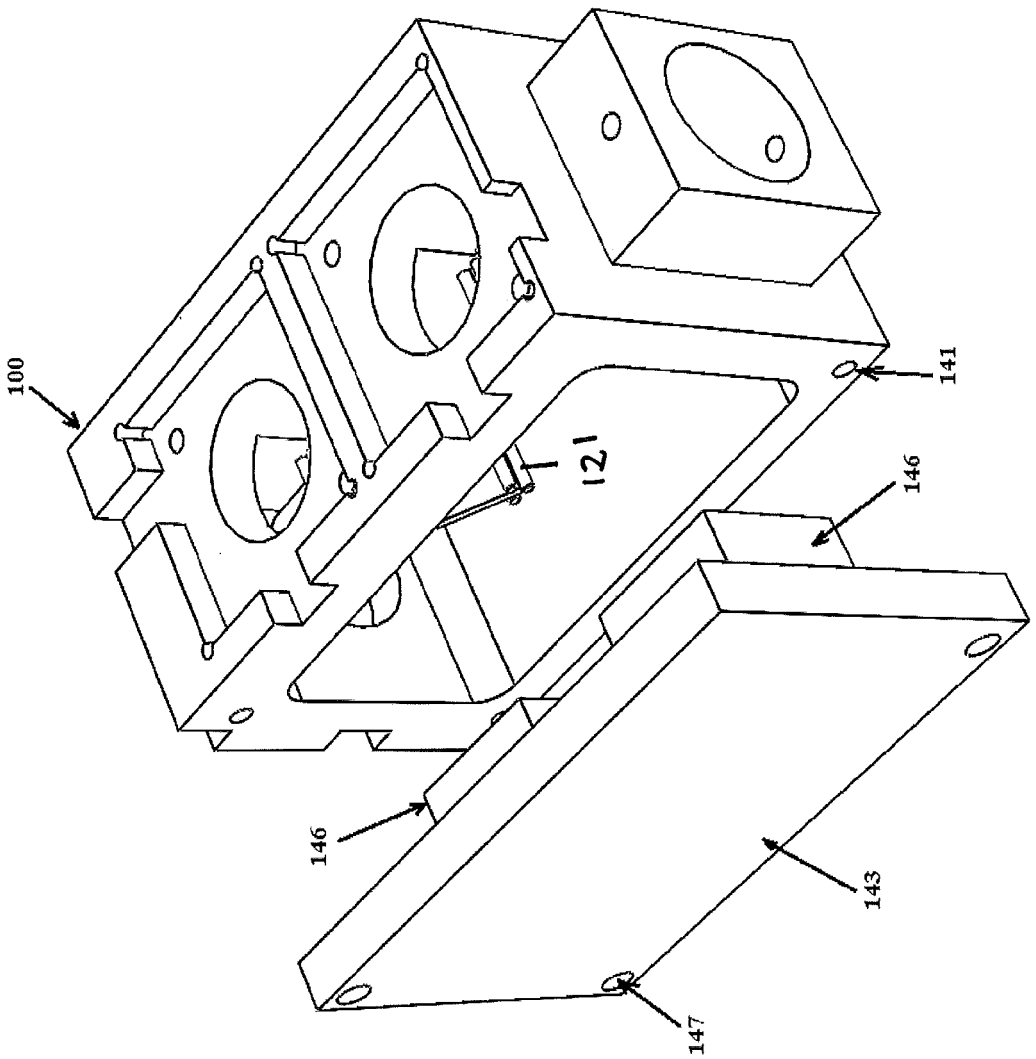

Figure 1u

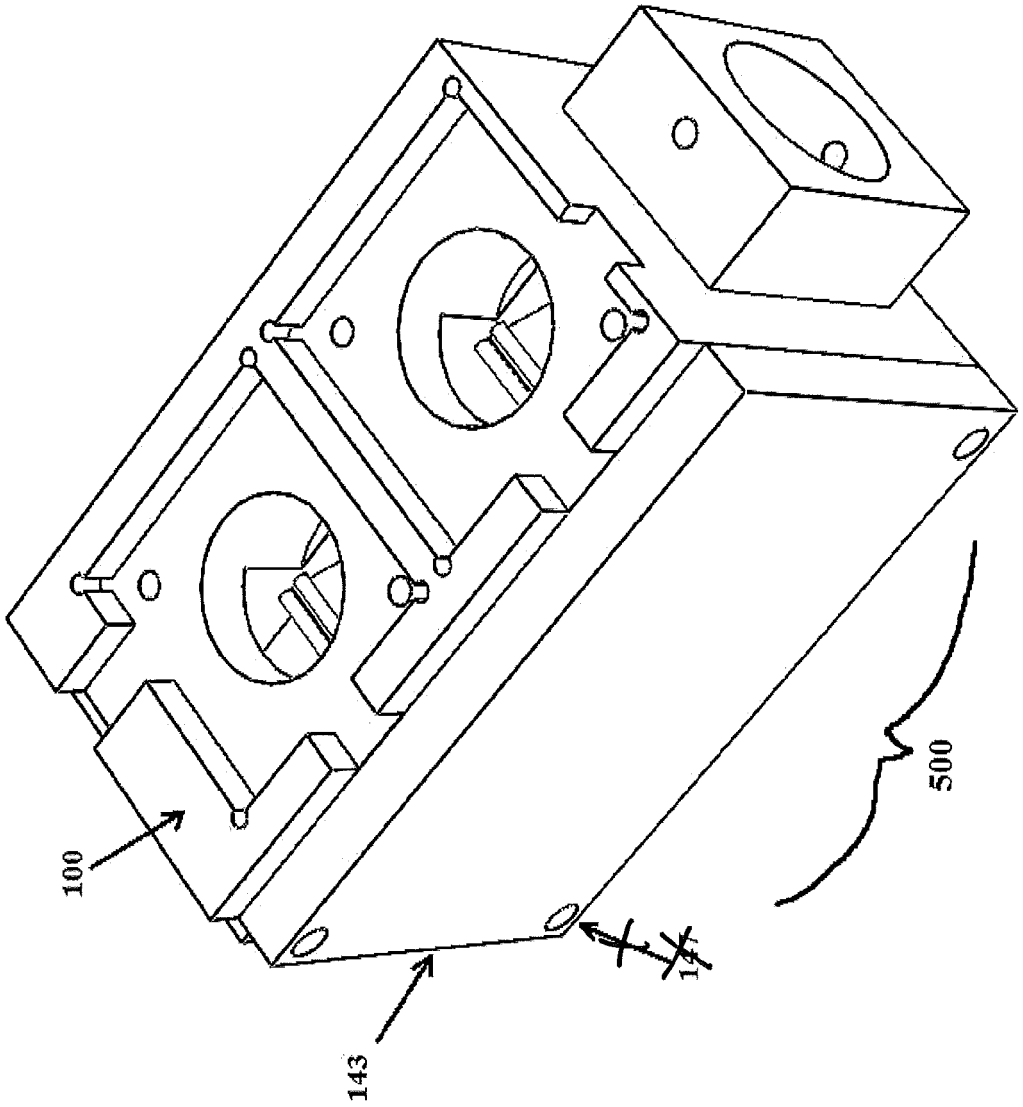

Figure 1v

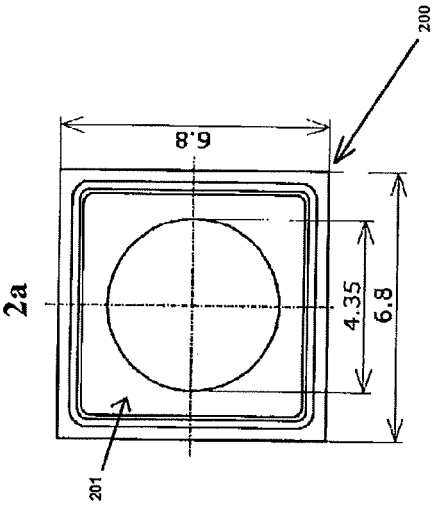

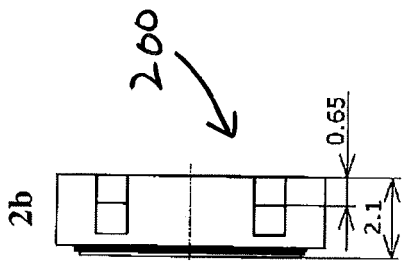

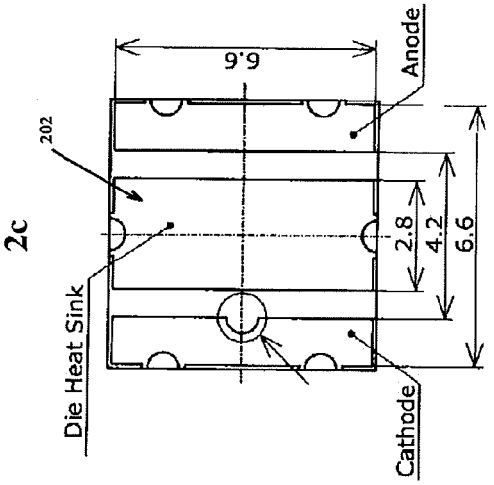

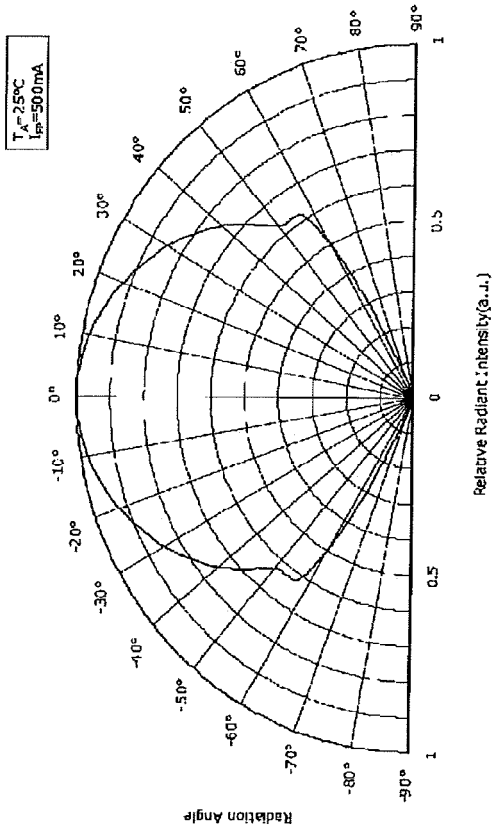

Figure 2a through 2d

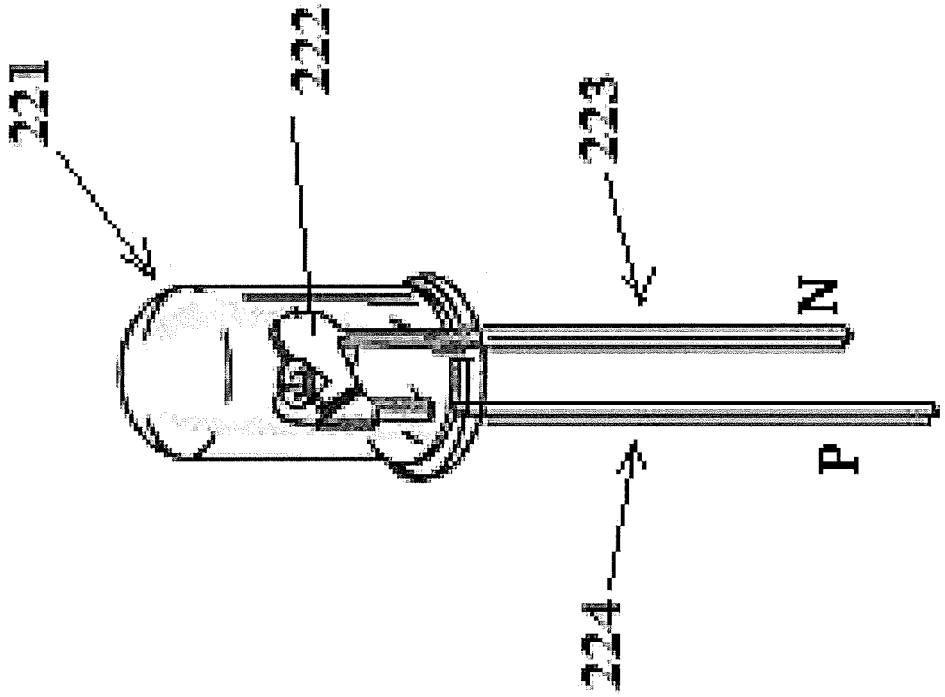

Figure 2e

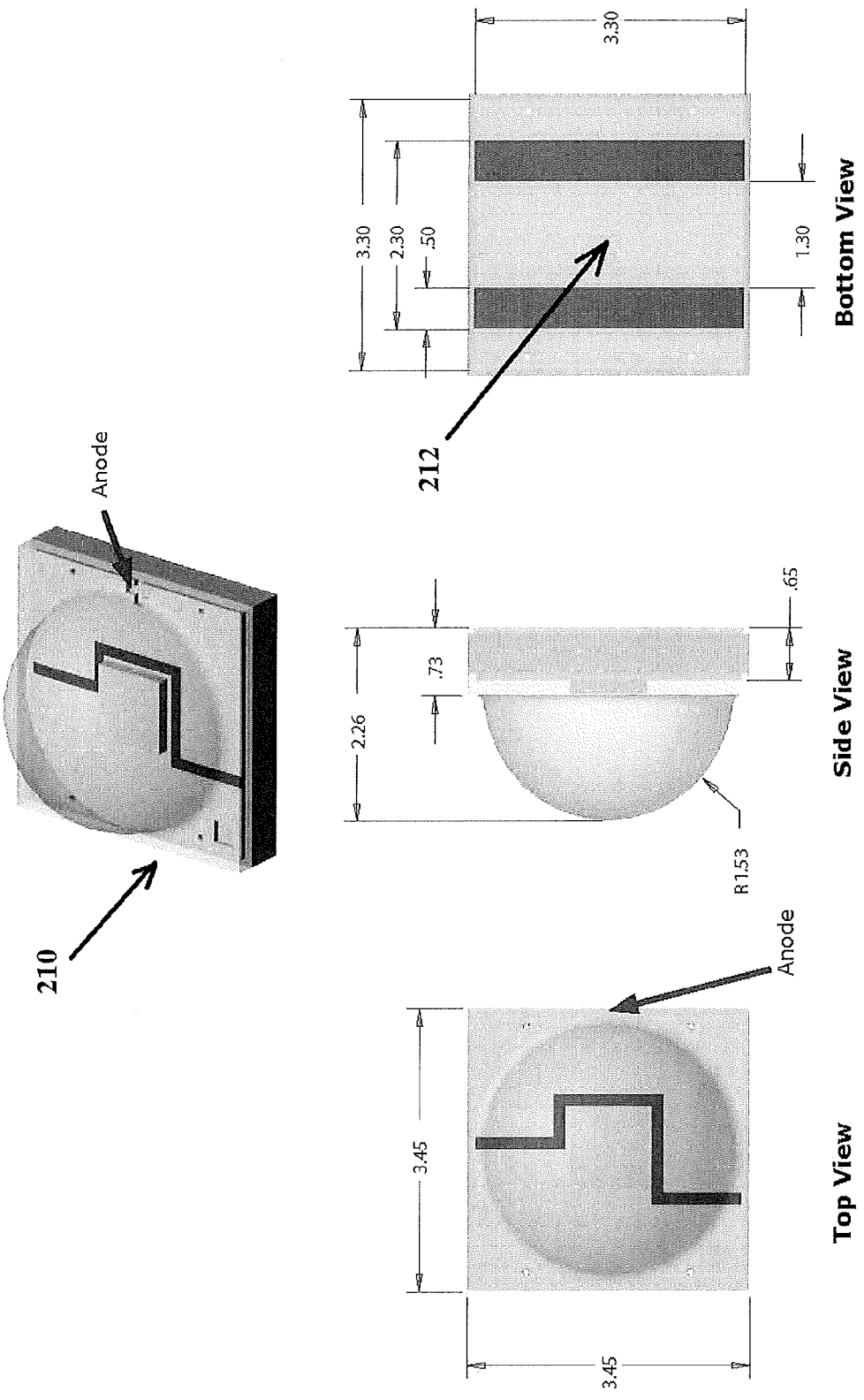
Anode
210
212
3.30
3.30
2.30
.50
1.30
Bottom View
.65
.73
2.26
R1.53
Side View
Anode
3.45
3.45
Top View

Figure 2f

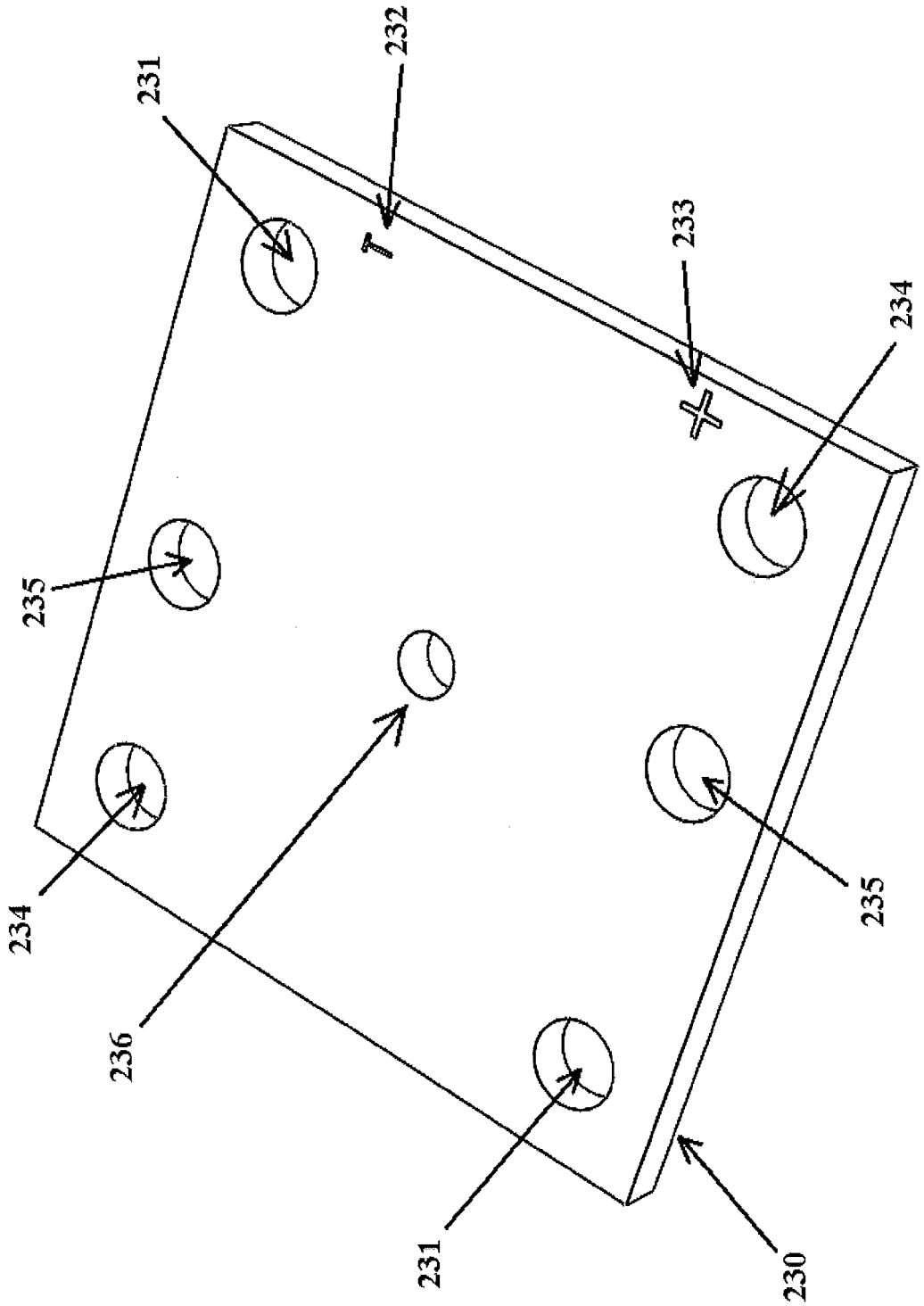

Figure 2g

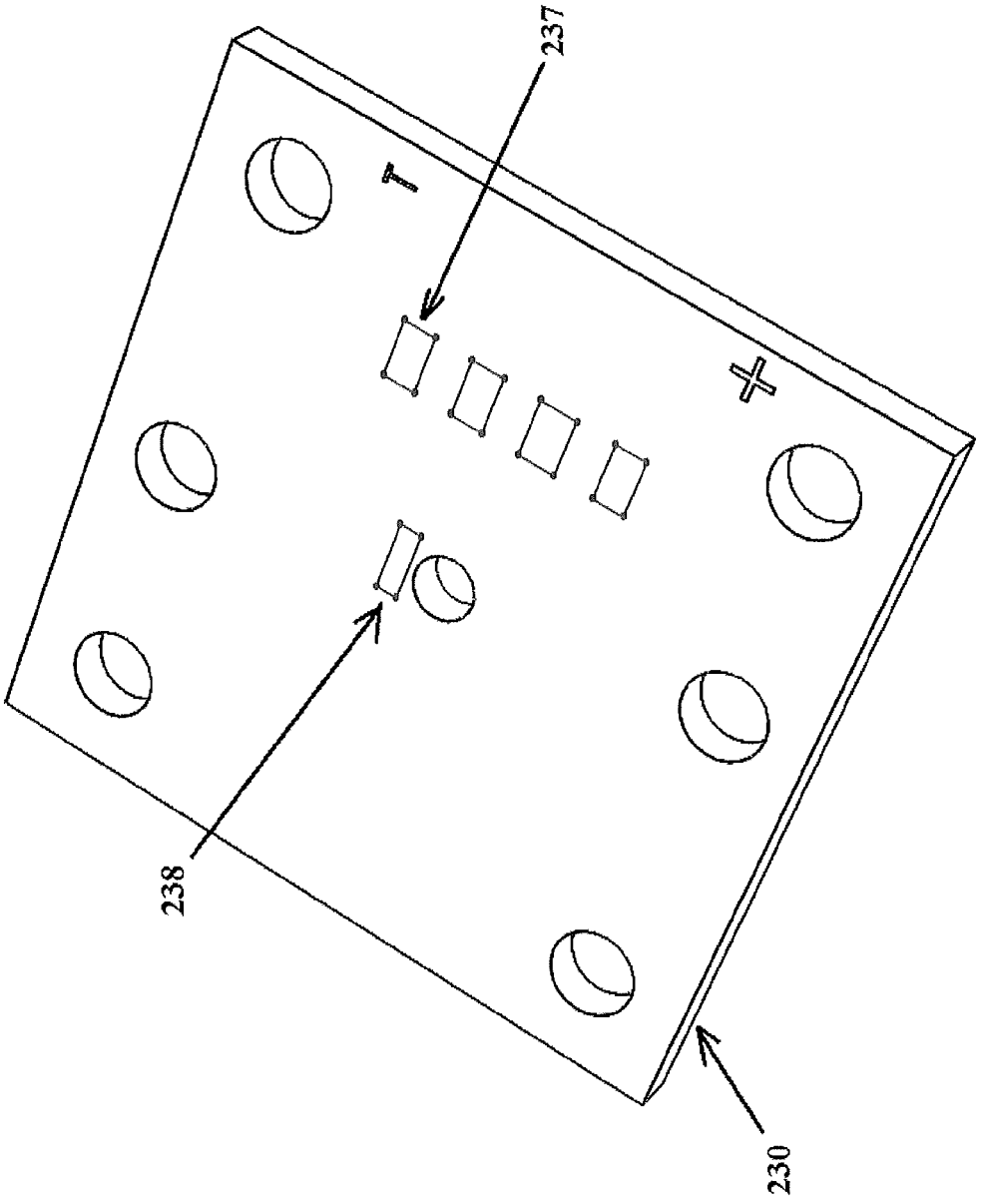

Figure 2h

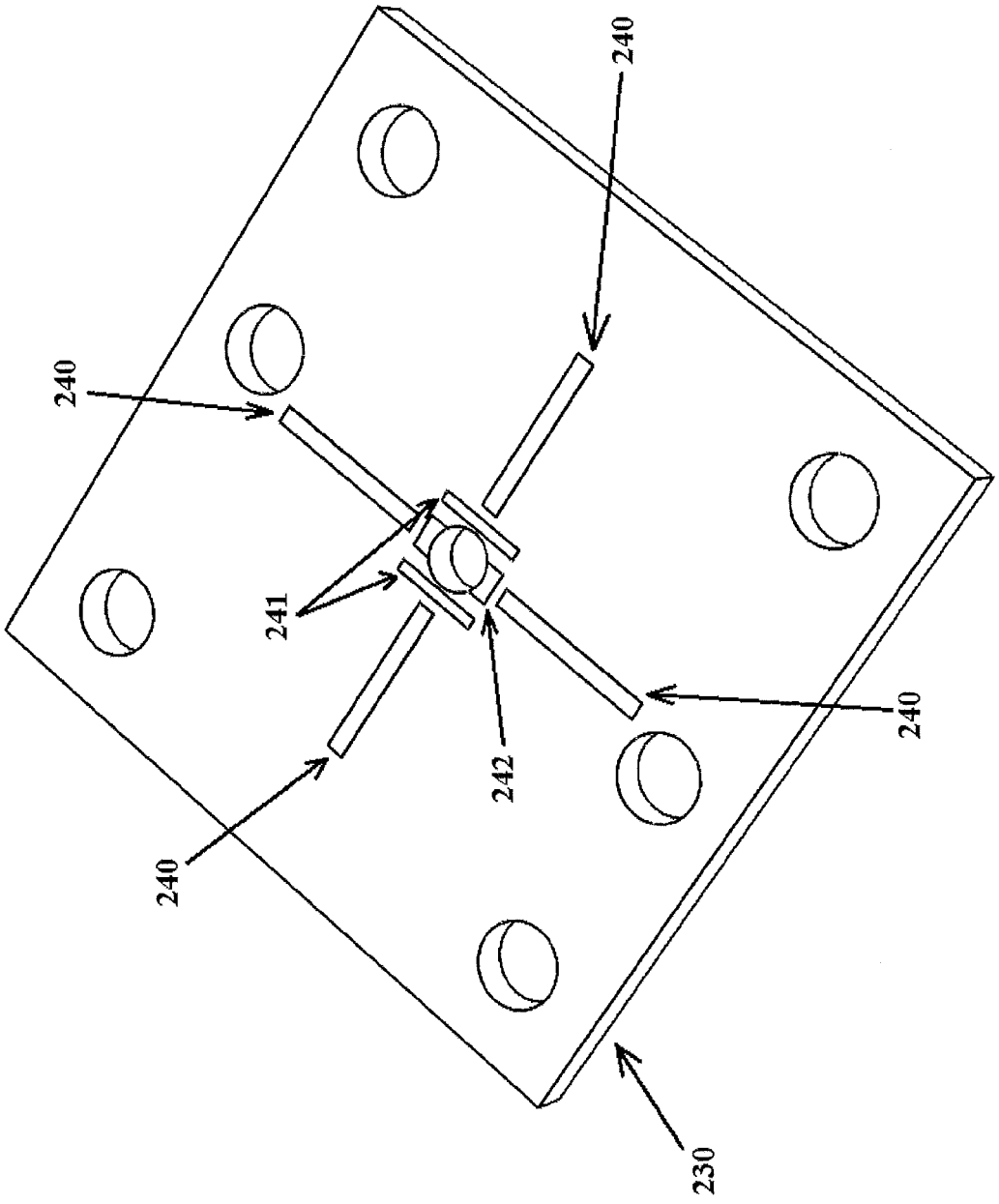

Figure 2i

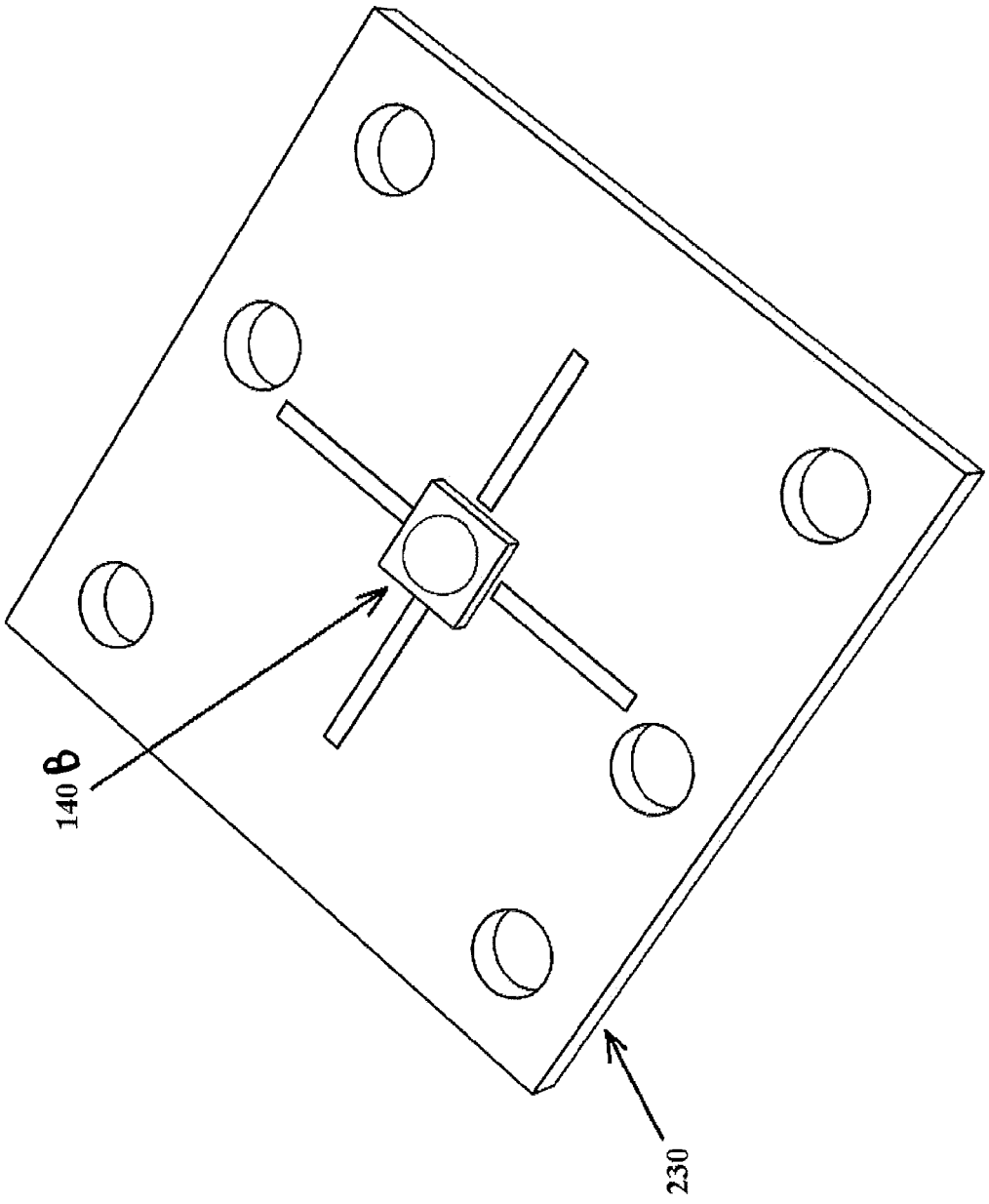

Figure 2j

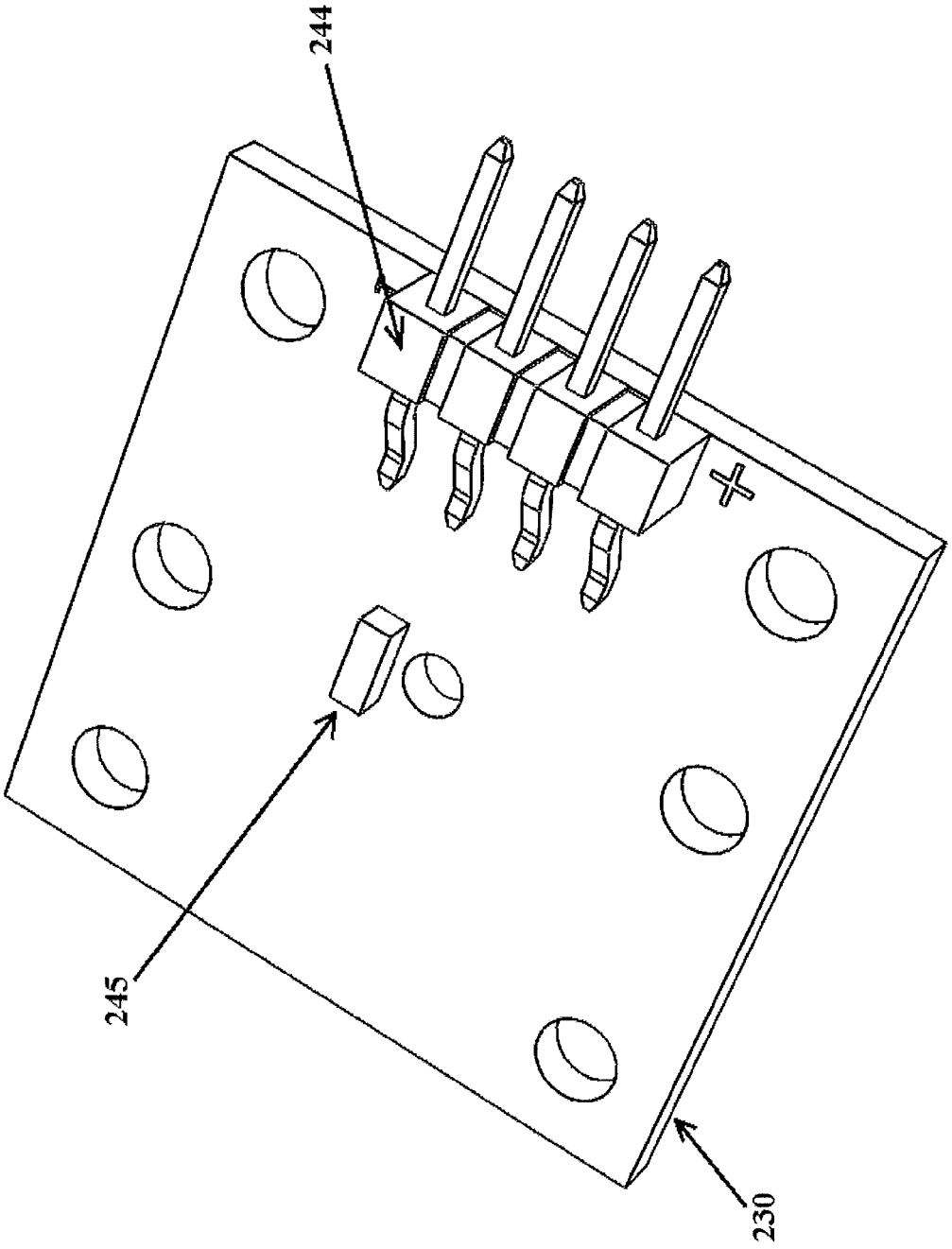

Figure 2k

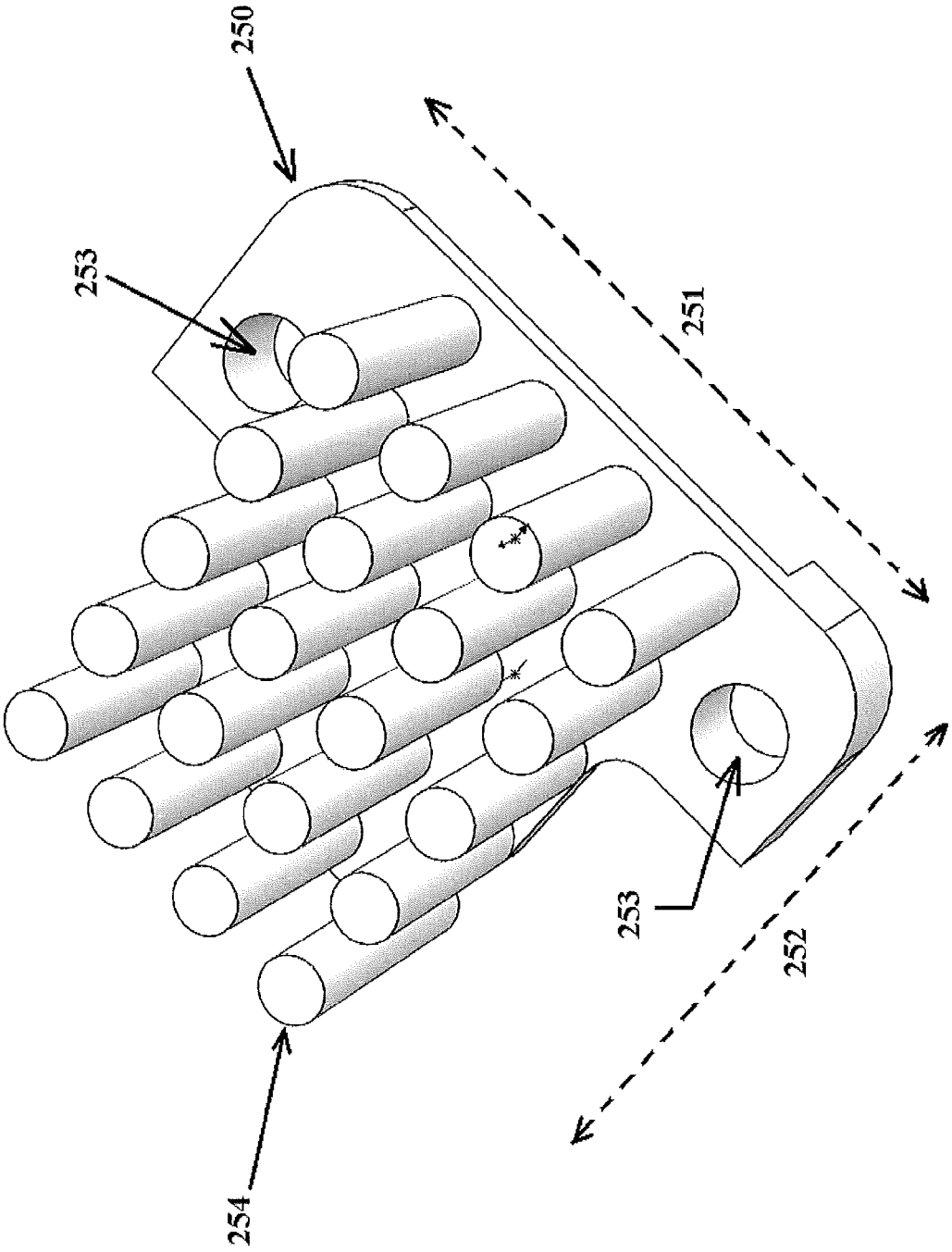

Figure 2L

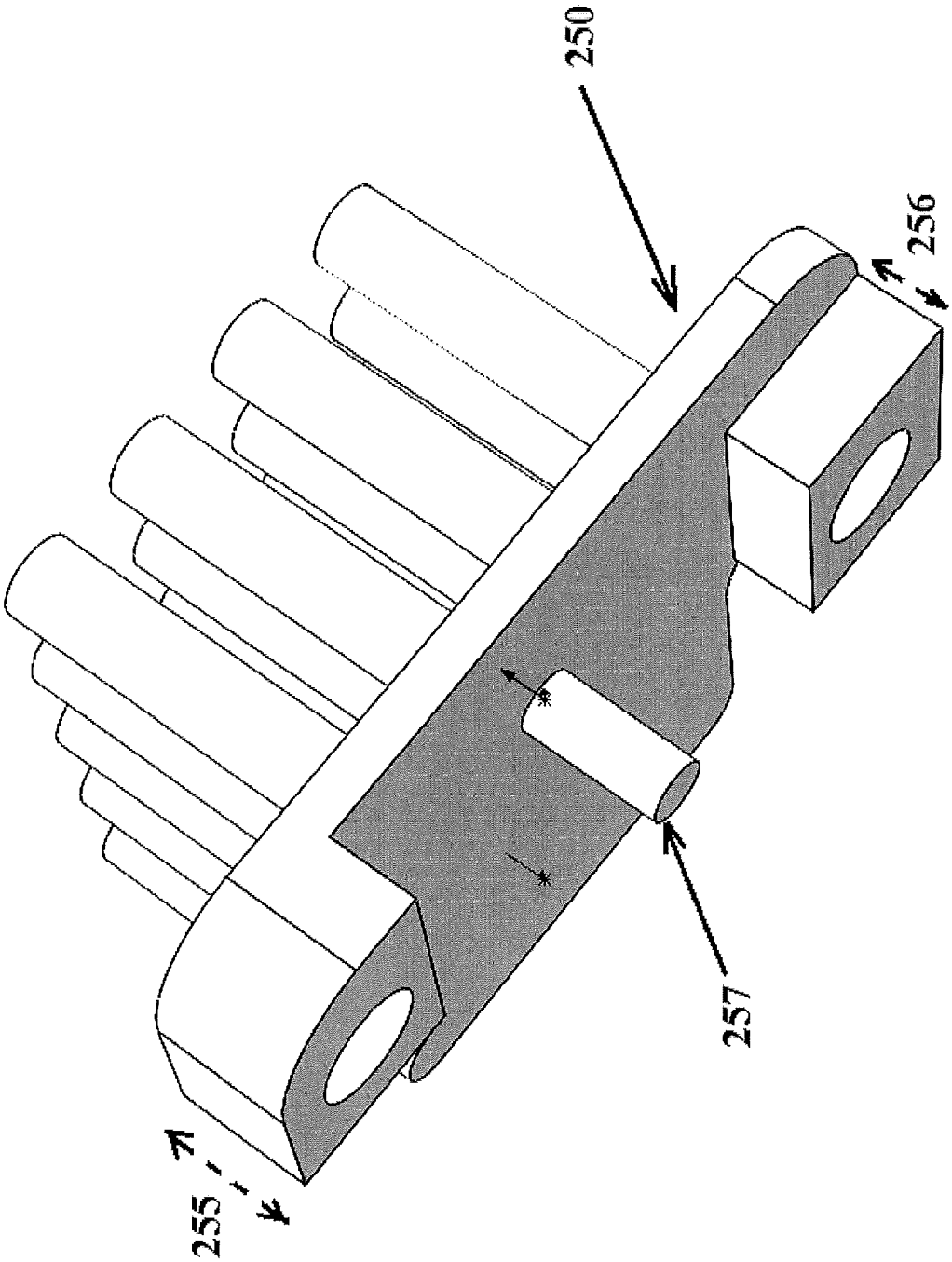

Figure 2m

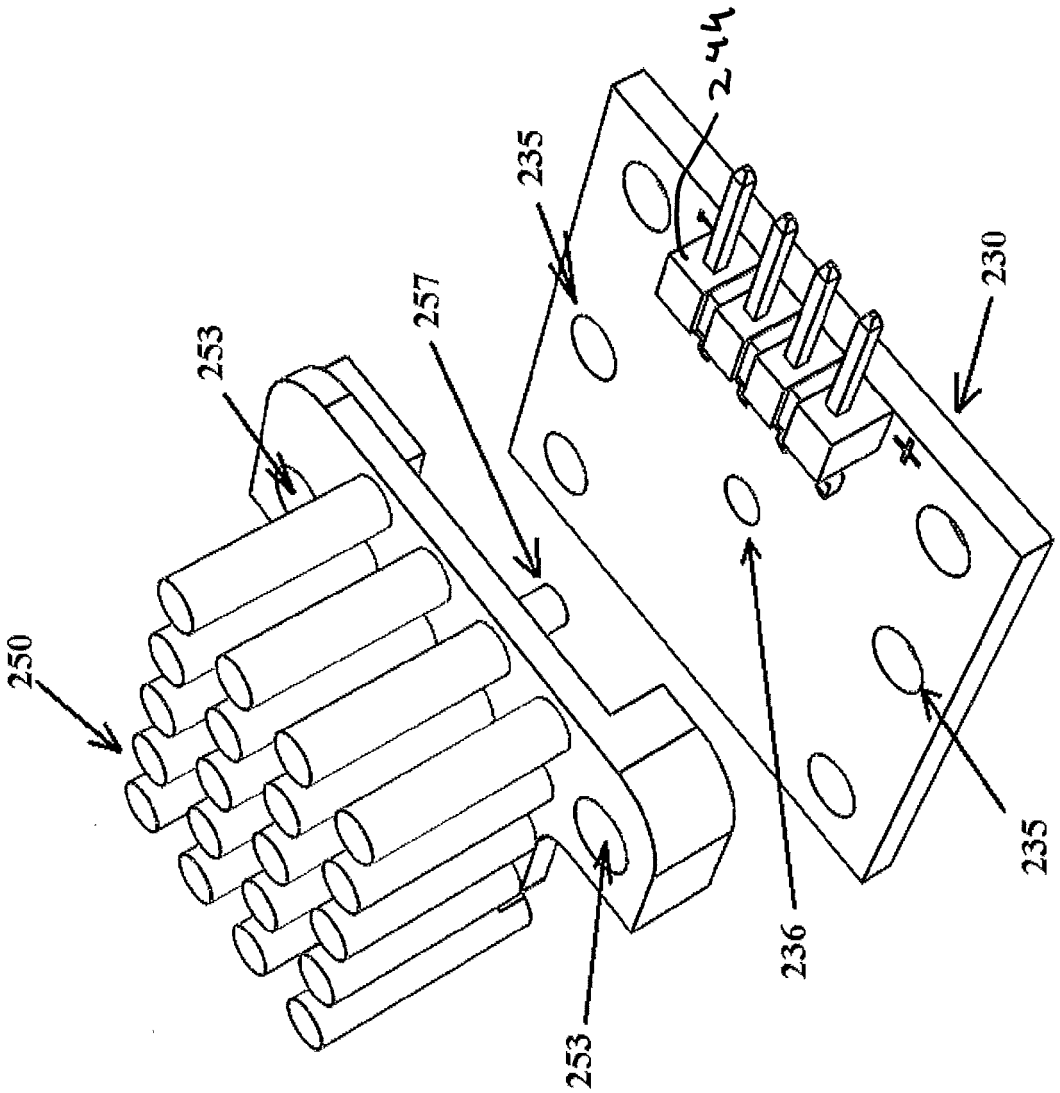

Figure 2n

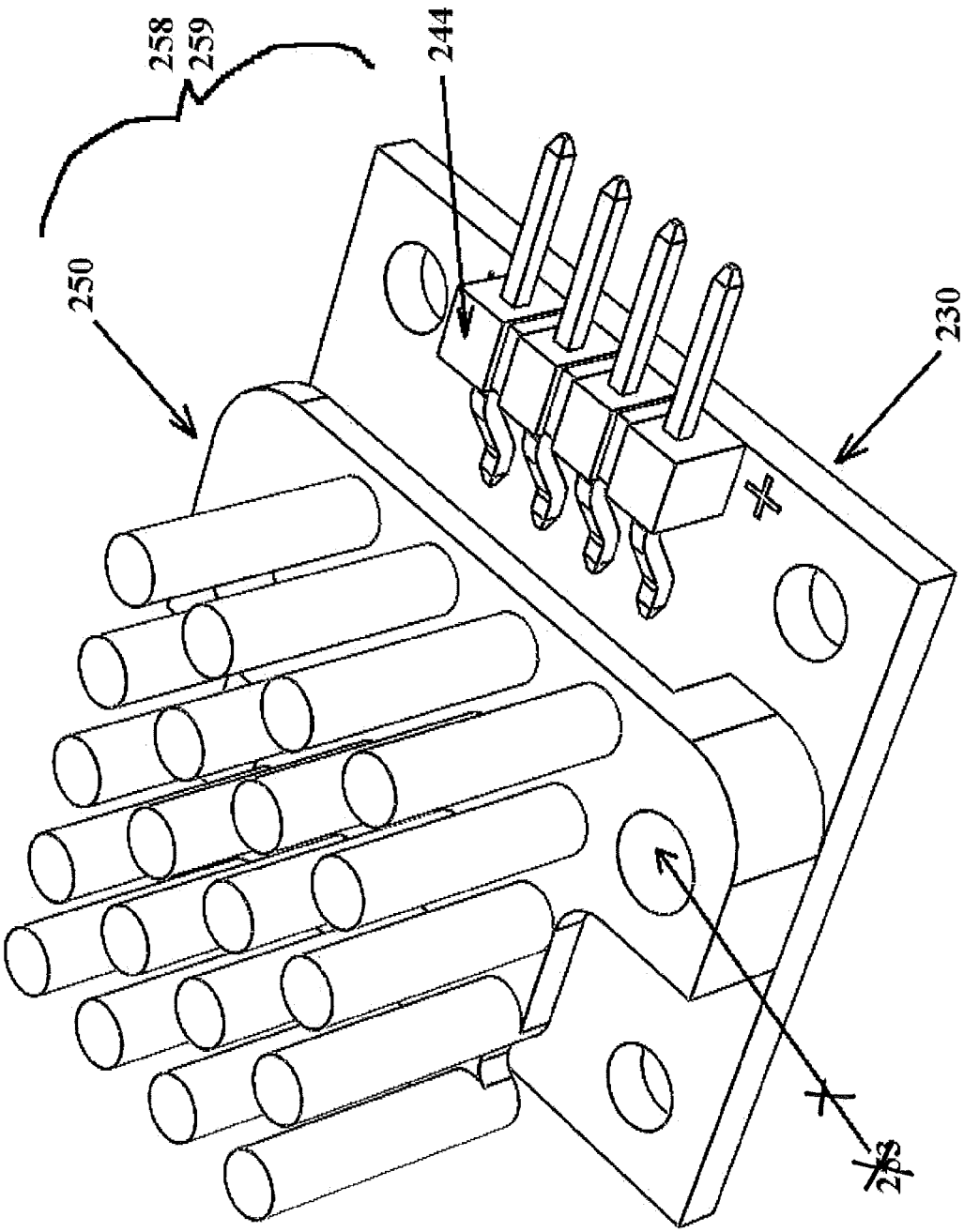

Figure 2o

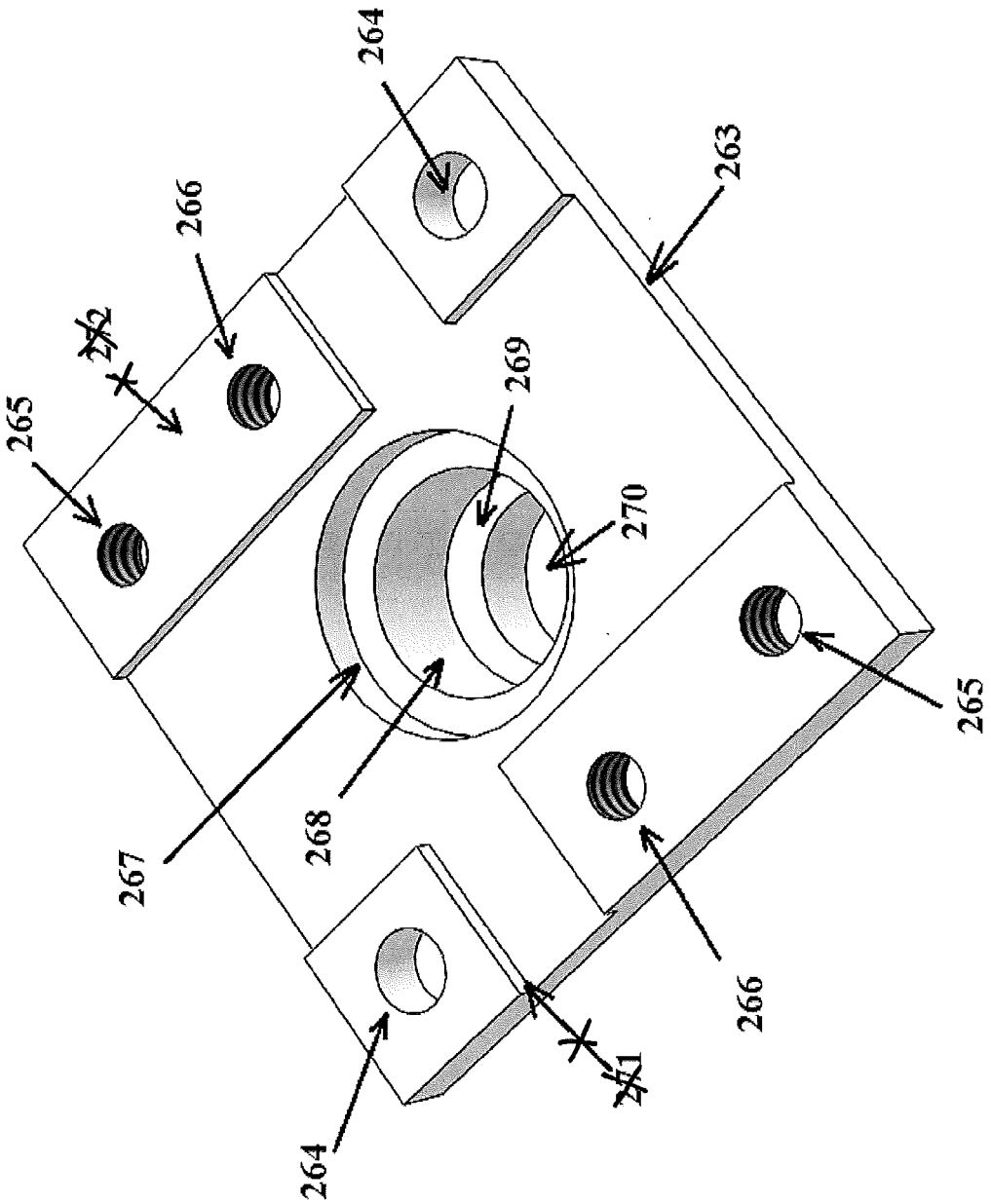

Figure 2P

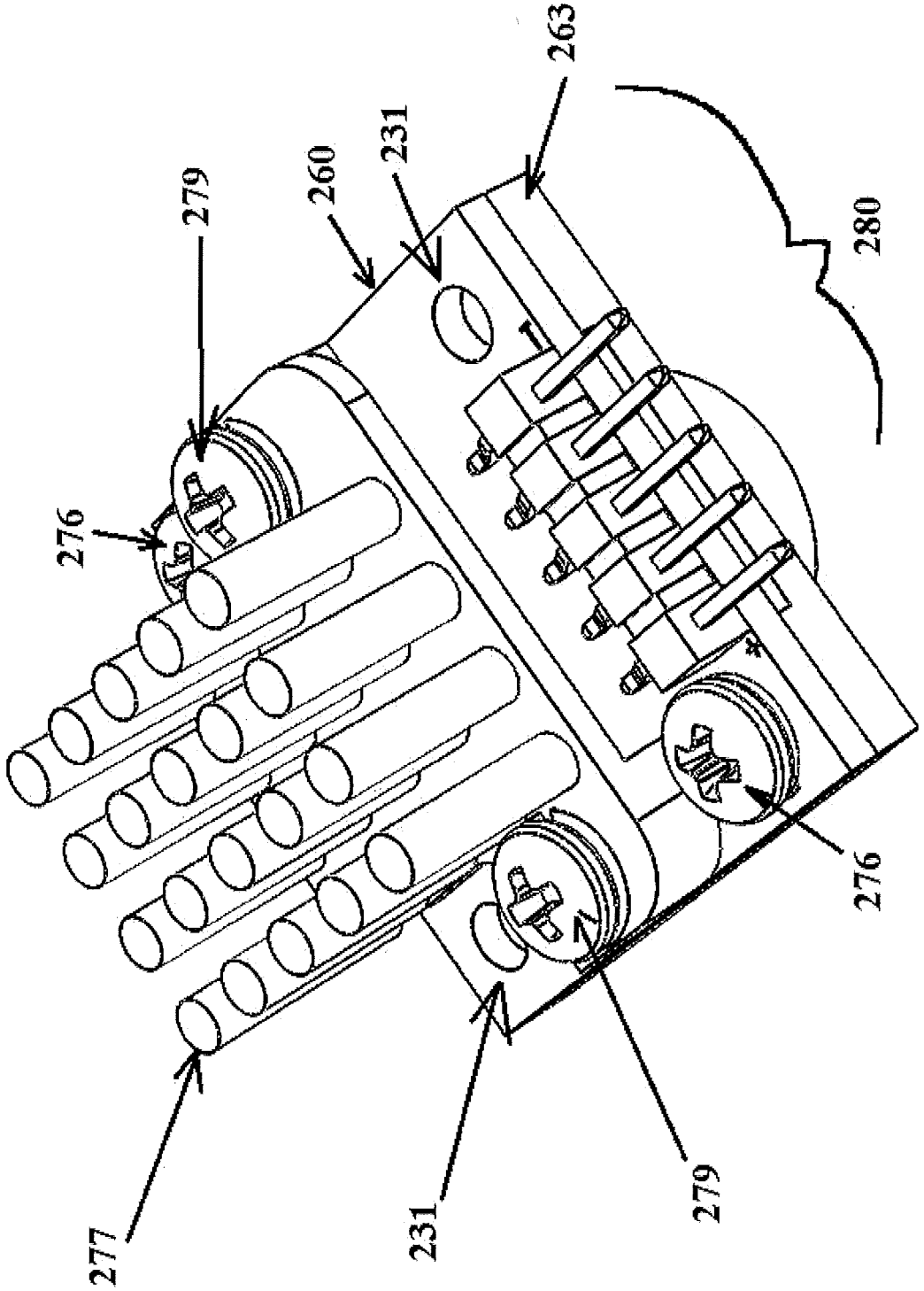

Figure 2Q

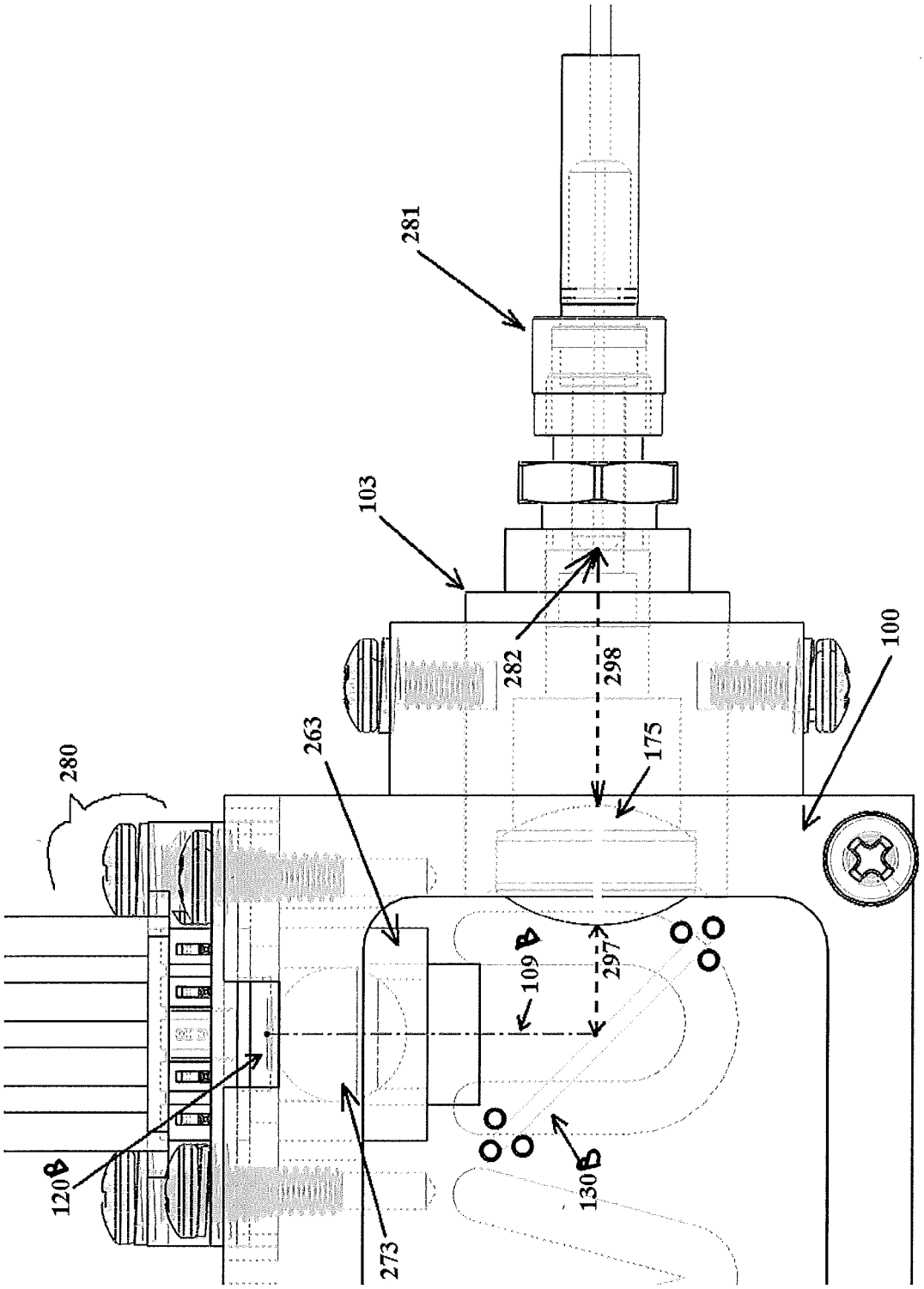

Figure 2R

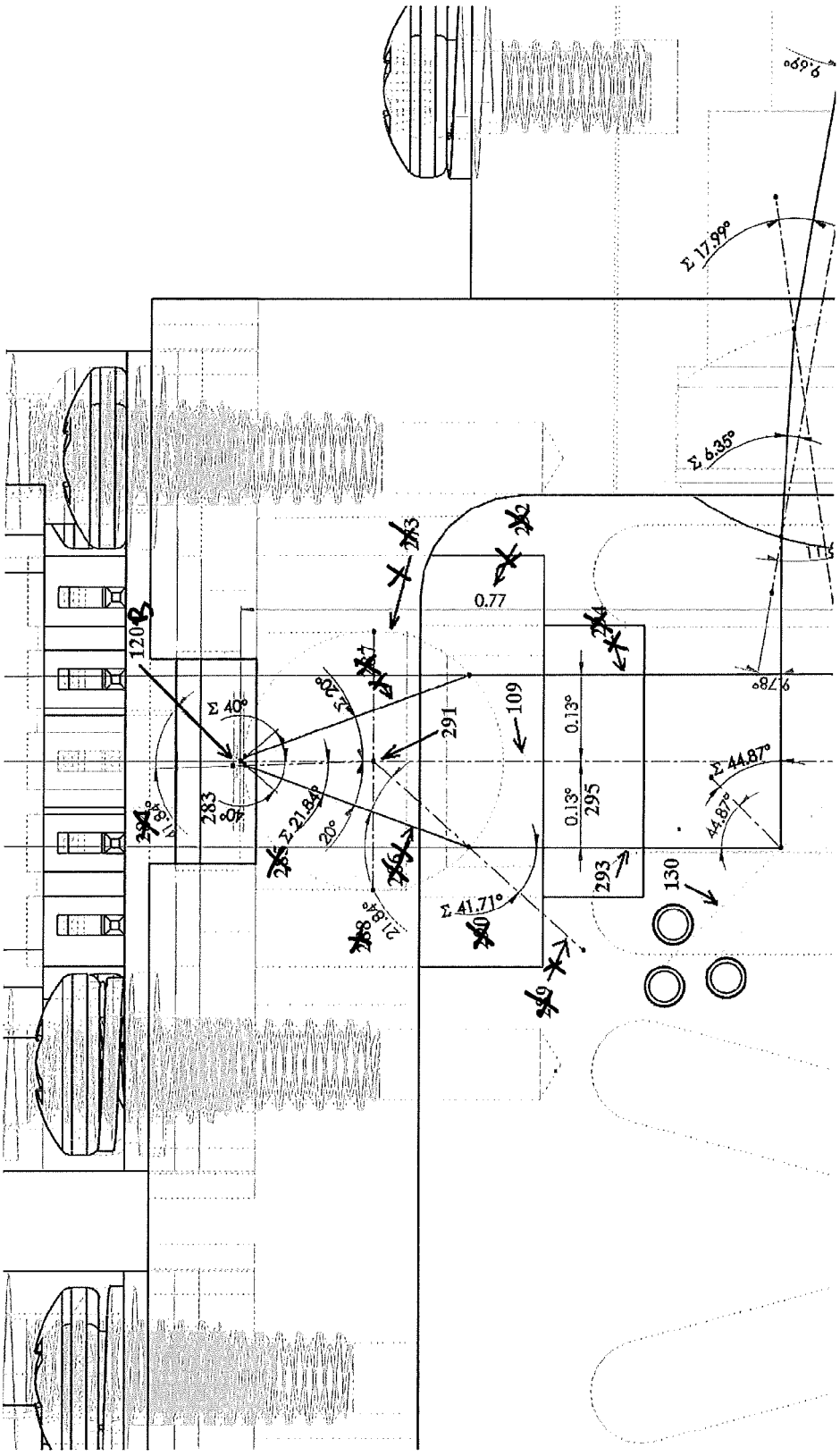
Σ 17.99°
Σ 6.35°
0.77
120
Σ 40°
291
109
0.13°
0.13°
295
283
Σ 21.84°
20°
Σ 44.87°
44.87°
293
130
Σ 41.71°

Figure 25

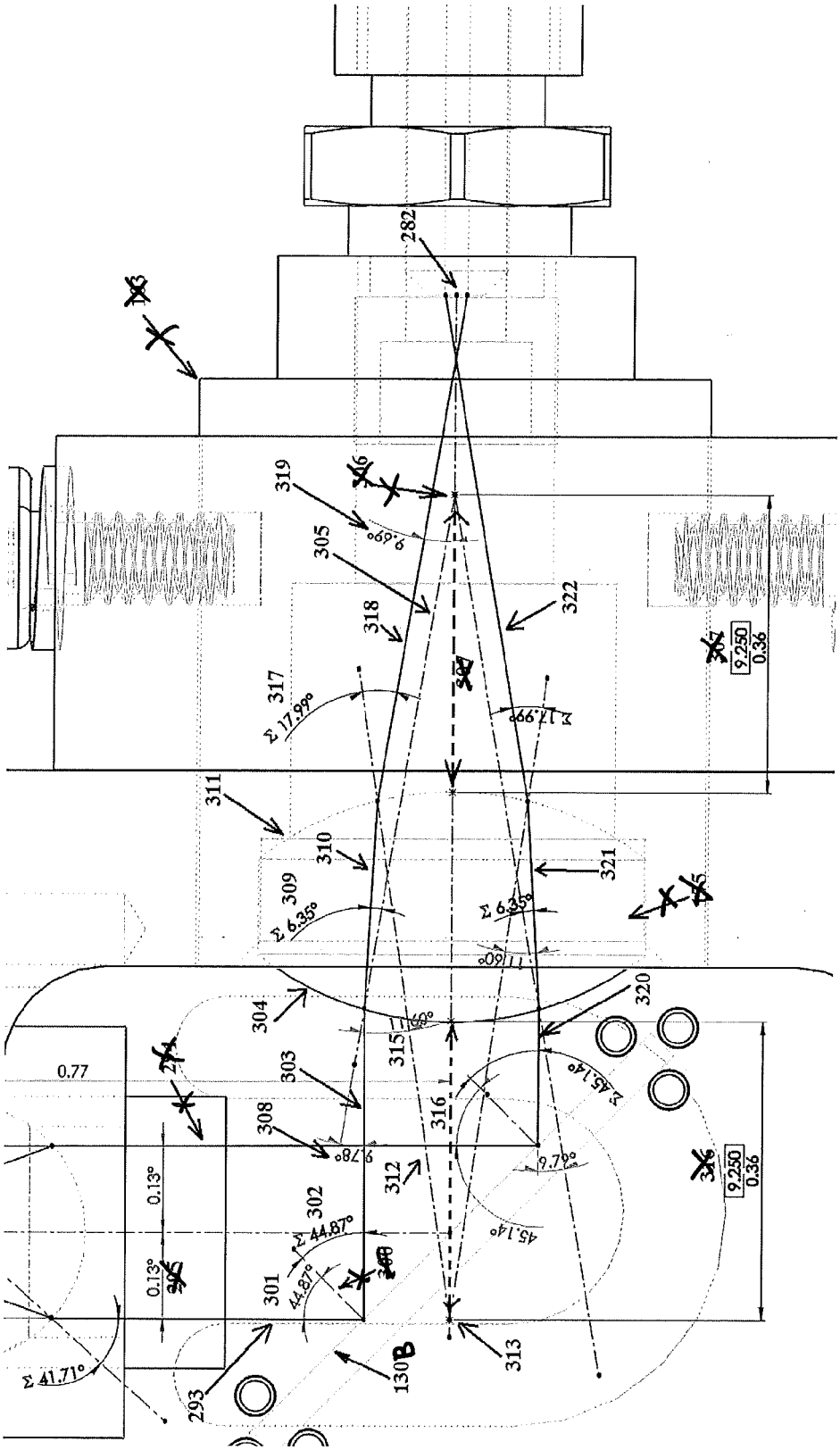
282
319
305
318
322
317
Σ 17.99°
311
310
321
309
Σ 6.35°
304
320
315
303
316
308
312
302
301
313
293
130B
0.77
0.13°
Σ 41.71°
Σ 44.87°
45.14°
9.78°
9.250
0.36

Figure 3a

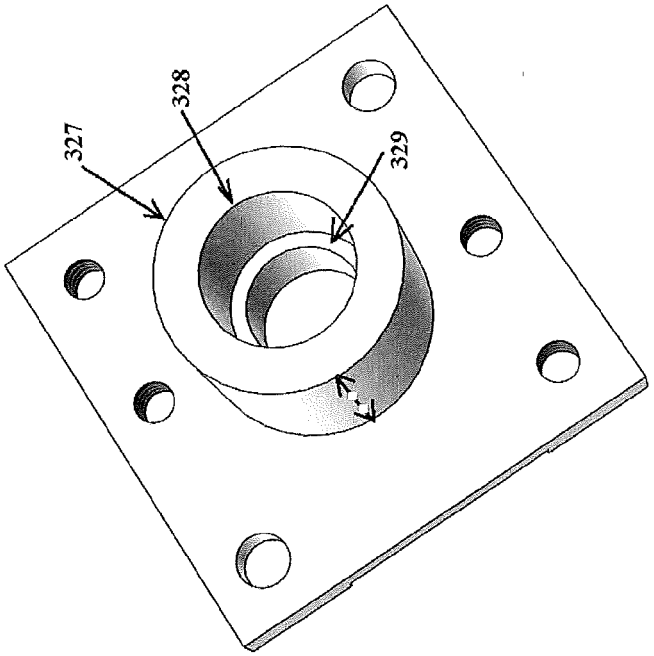

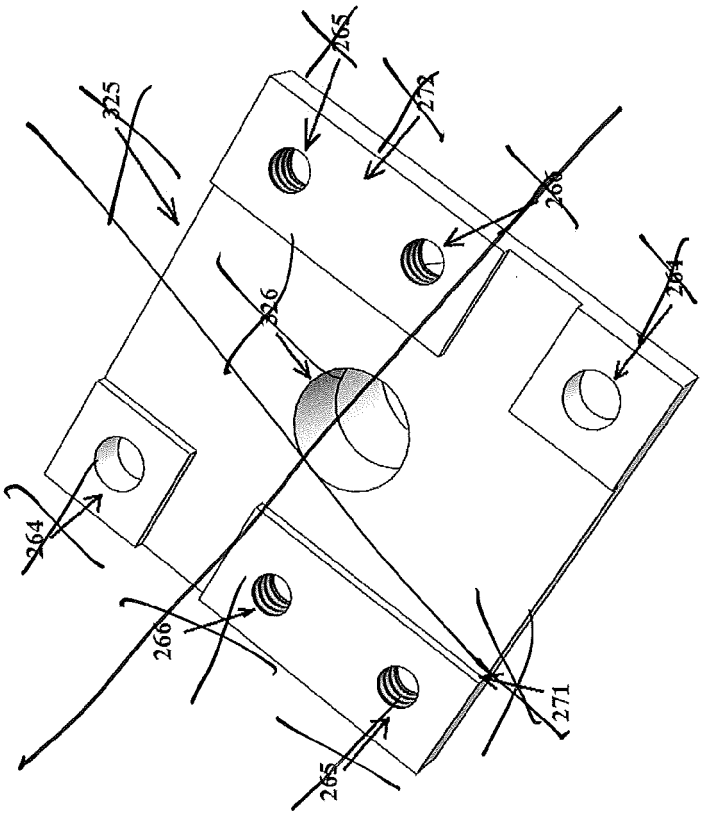

Figure 3b

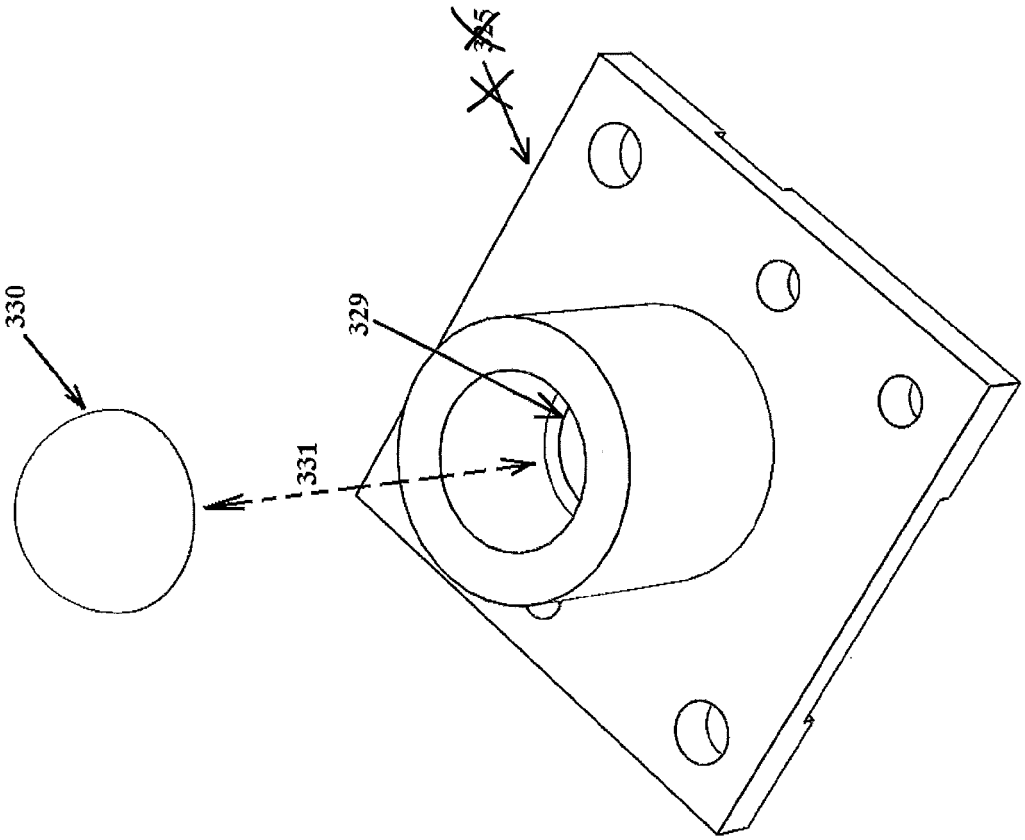

Figure 3c

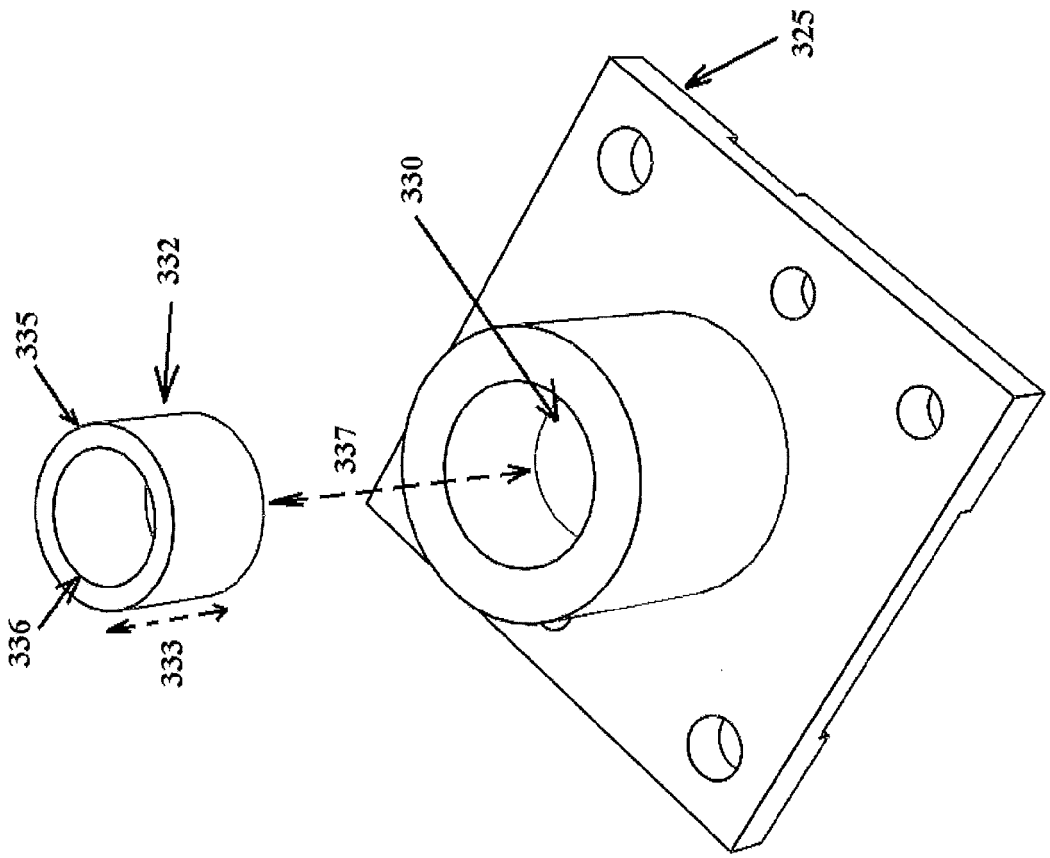

Figure 3d

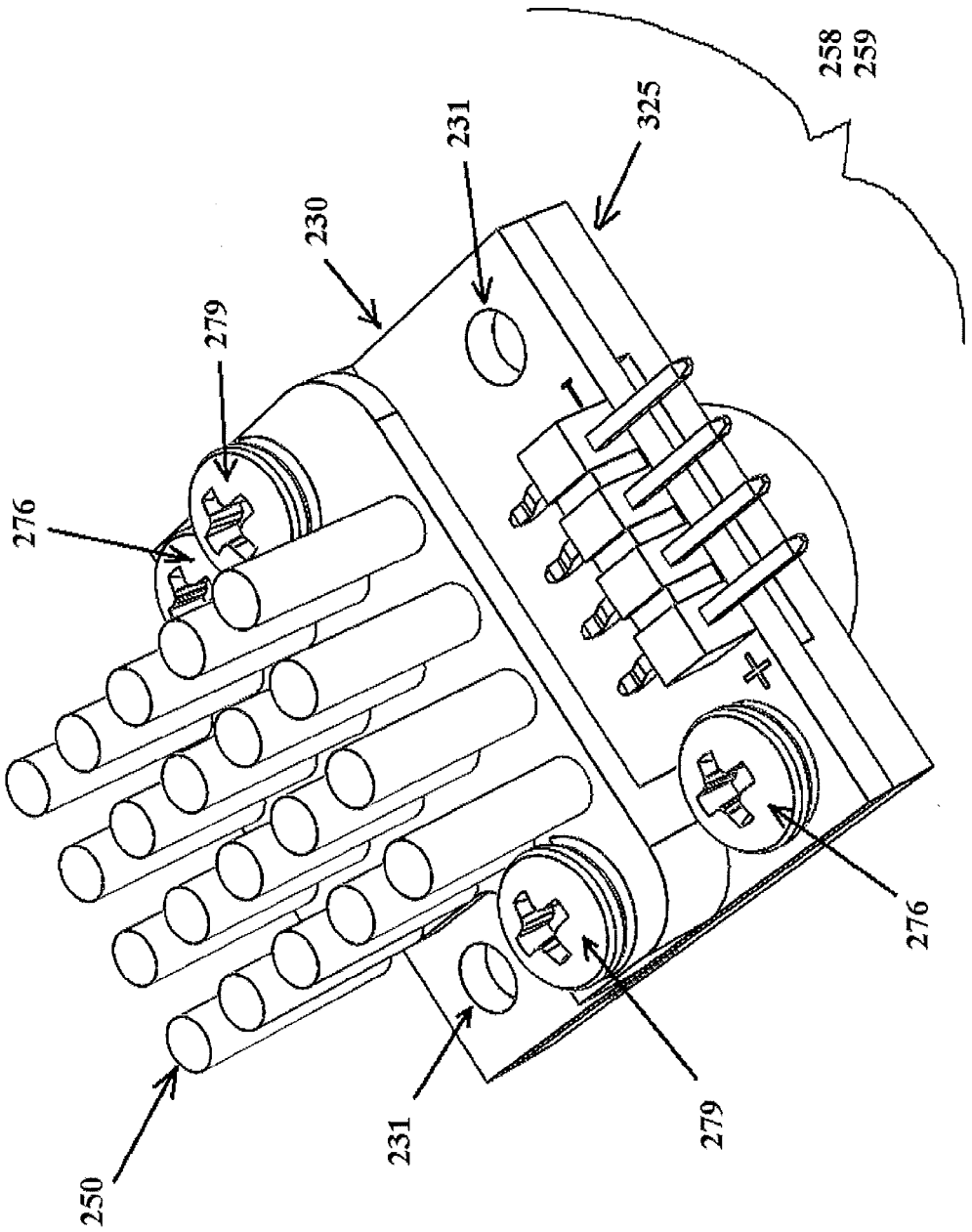

Figure 3e

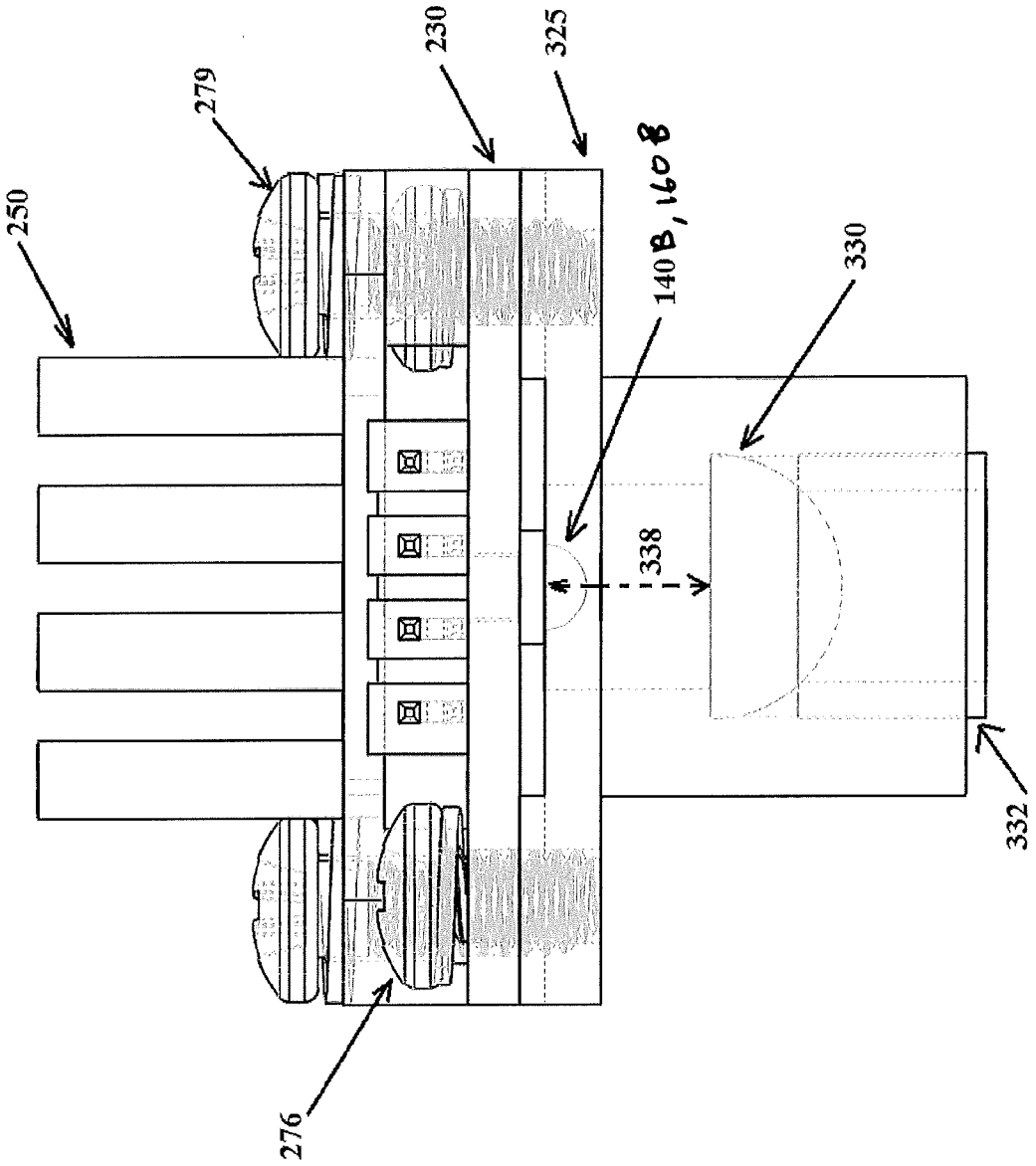

Figure 3f

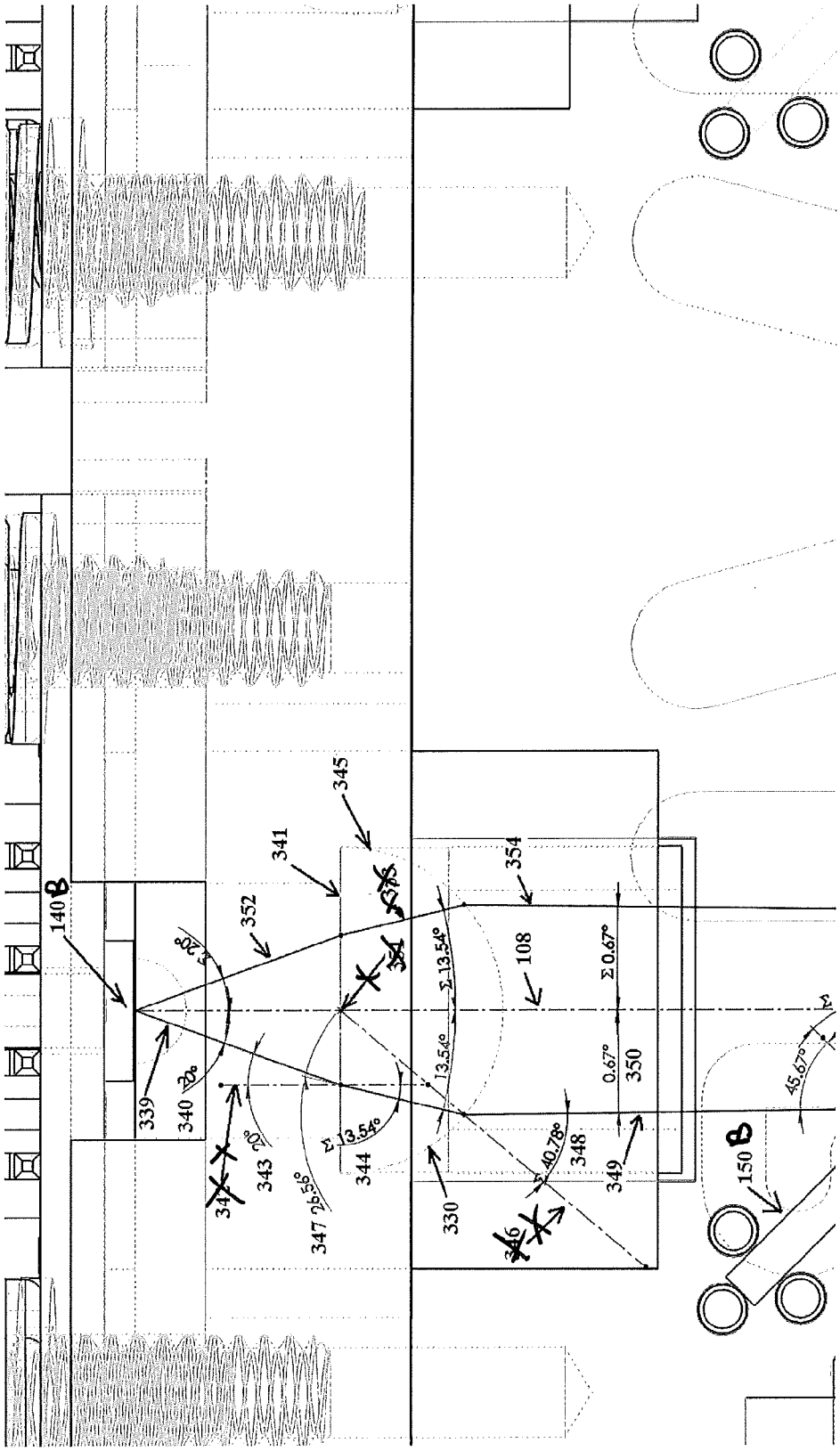
140 B
339
340
343
347
344
330
348
349
350
108
354
341
345
352
150 B
Σ 13.54°
13.54°
Σ 0.67°
0.67°
Σ 40.78°
45.67°
26.56°
20°

Figure 3g

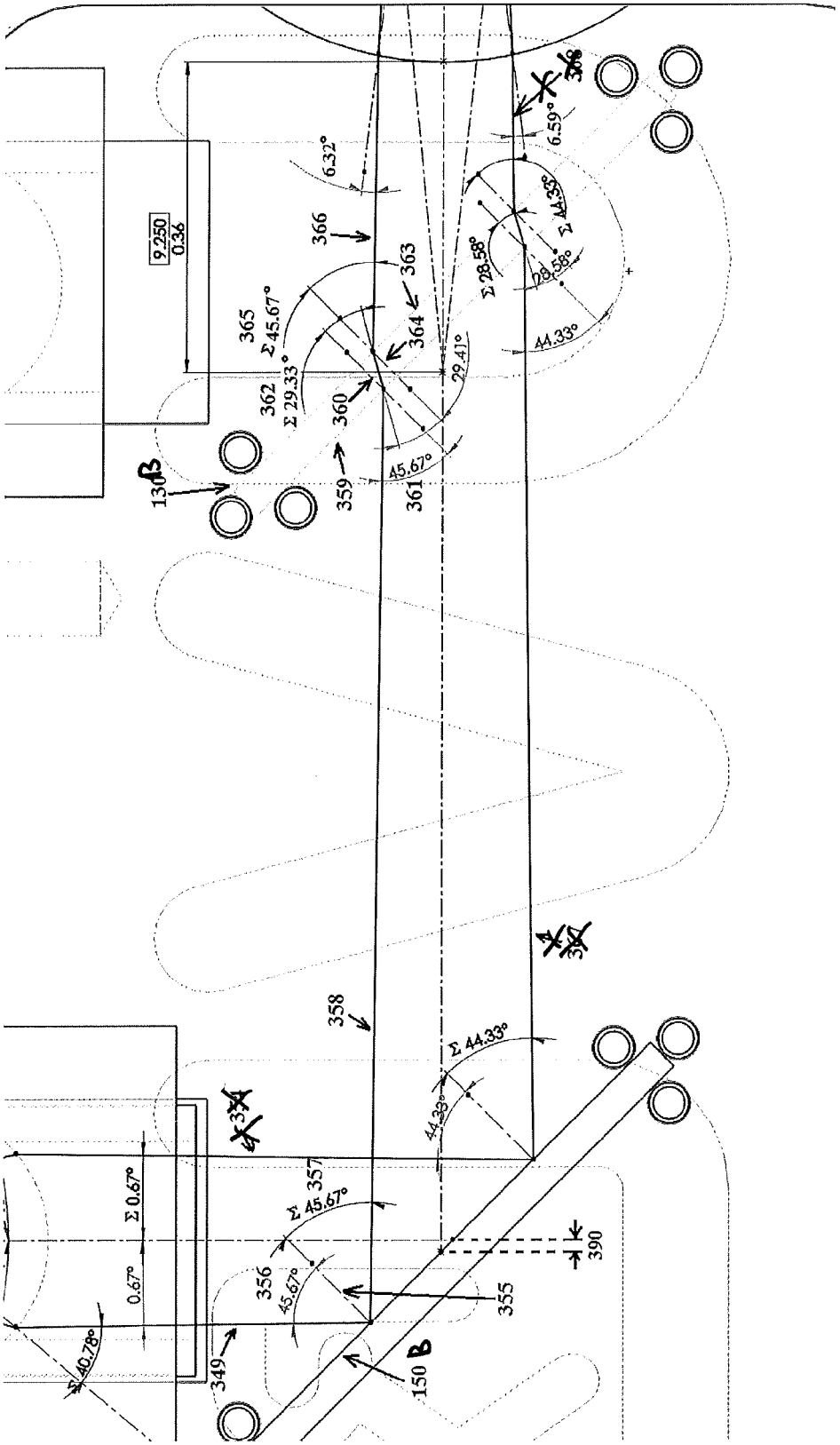
9.250
0.36
6.32°
6.59°
Σ 44.33°
Σ 28.58°
28.58°
44.33°
366
363
365
Σ 45.67°
364
362
Σ 29.33°
360
29.41°
45.67°
359
361
130
B
358
Σ 44.33°
44.33°
Σ 45.67°
357
356
45.67°
355
390
Σ 0.67°
0.67°
Σ 40.78°
349
150
B

Figure 3h

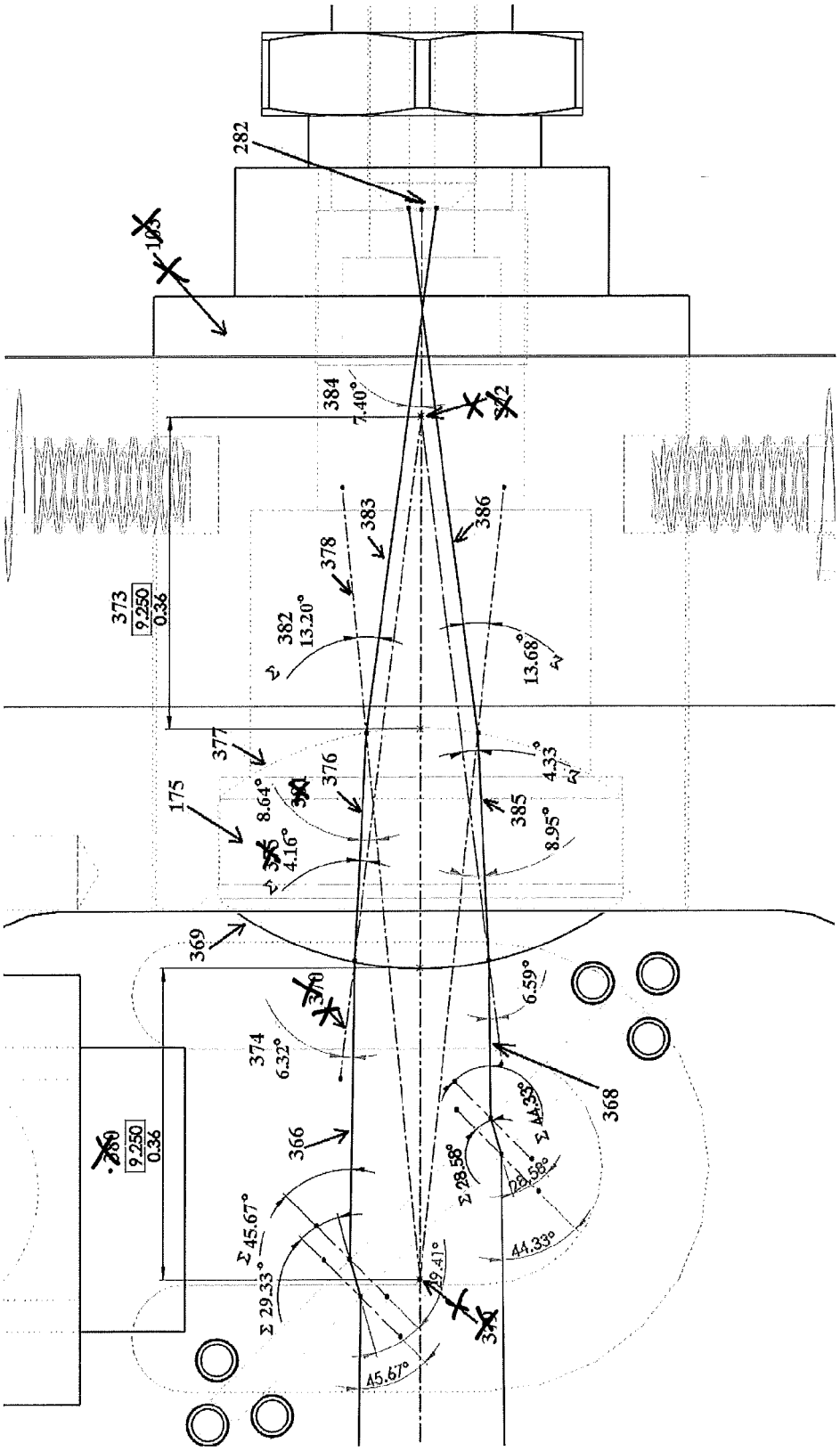
282
384
7.40°
383
386
378
373
9.250
0.36
382
13.20°
13.68°
377
376
175
8.64°
4.16°
385
8.95°
4.33°
369
6.59°
374
6.32°
368
366
Σ 44.33°
Σ 28.58°
Σ 45.67°
Σ 29.33°
29.41°
44.33°
45.67°

Figure 3i

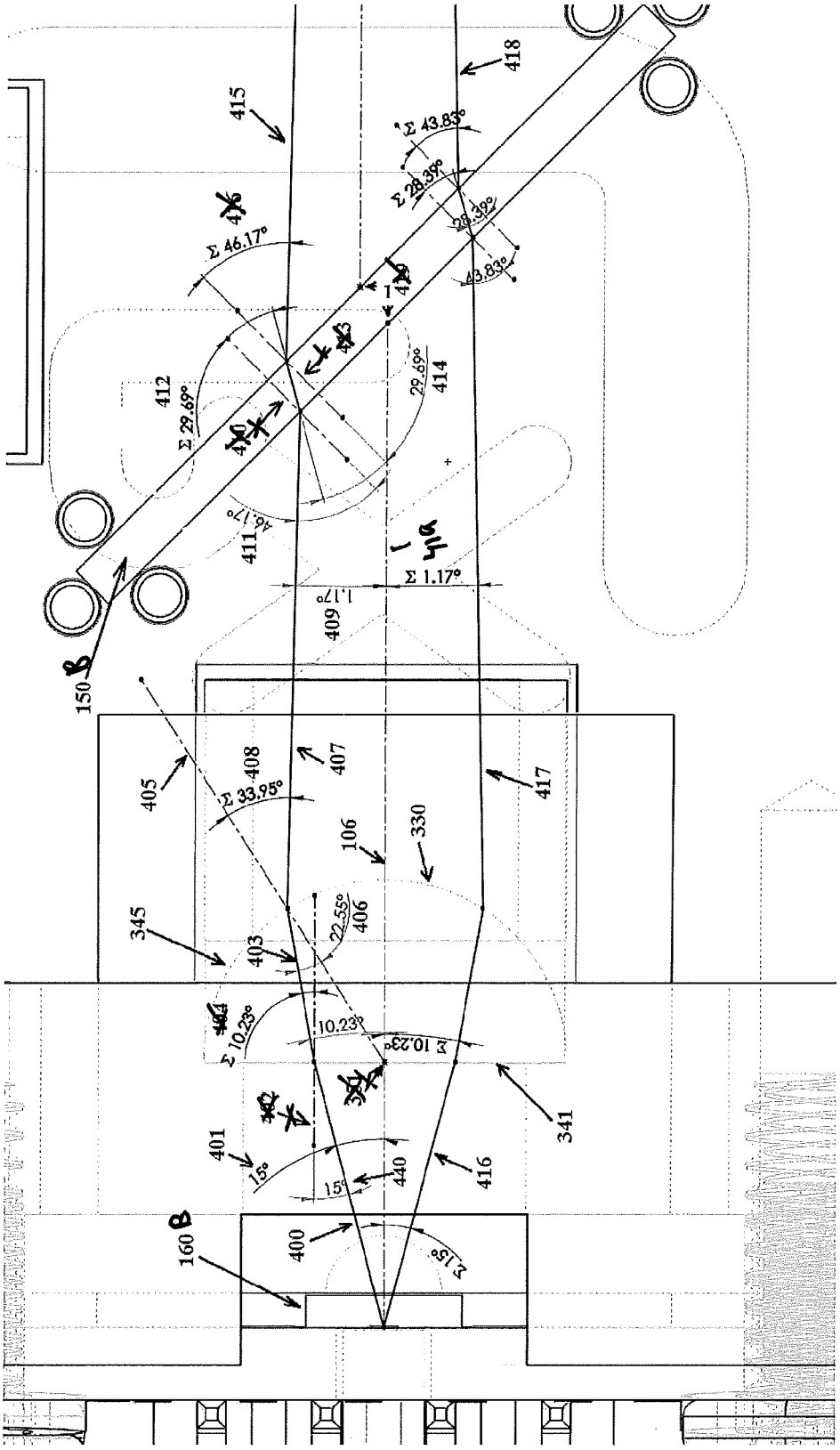
418
415
Σ 43.83°
Σ 28.39°
28.39°
43.83°
Σ 46.17°
412
Σ 29.69°
29.69°
414
411
46.17°
Σ 1.17°
1.17°
409
150
405
408
Σ 33.95°
407
417
106
330
345
403
22.58°
406
Σ 10.23°
10.23°
341
401
15°
15°
440
416
160
400
15°

Figure 4a

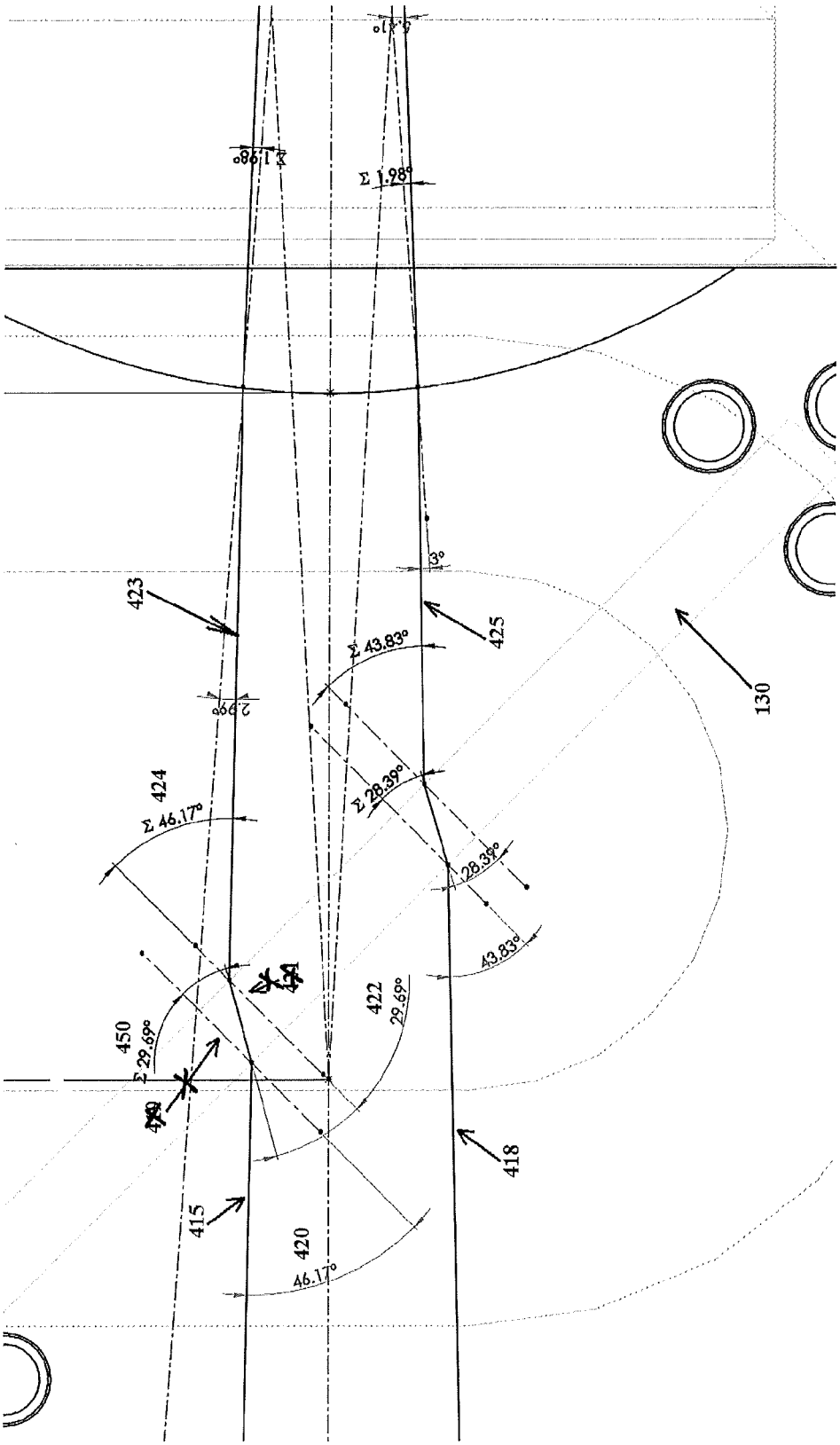
Σ 1.98°
Σ 1.98°
3°
423
425
130
Σ 43.83°
Σ 28.39°
424
Σ 46.17°
28.39°
43.83°
422
29.69°
450
Σ 29.69°
418
415
420
46.17°

Figure 4b

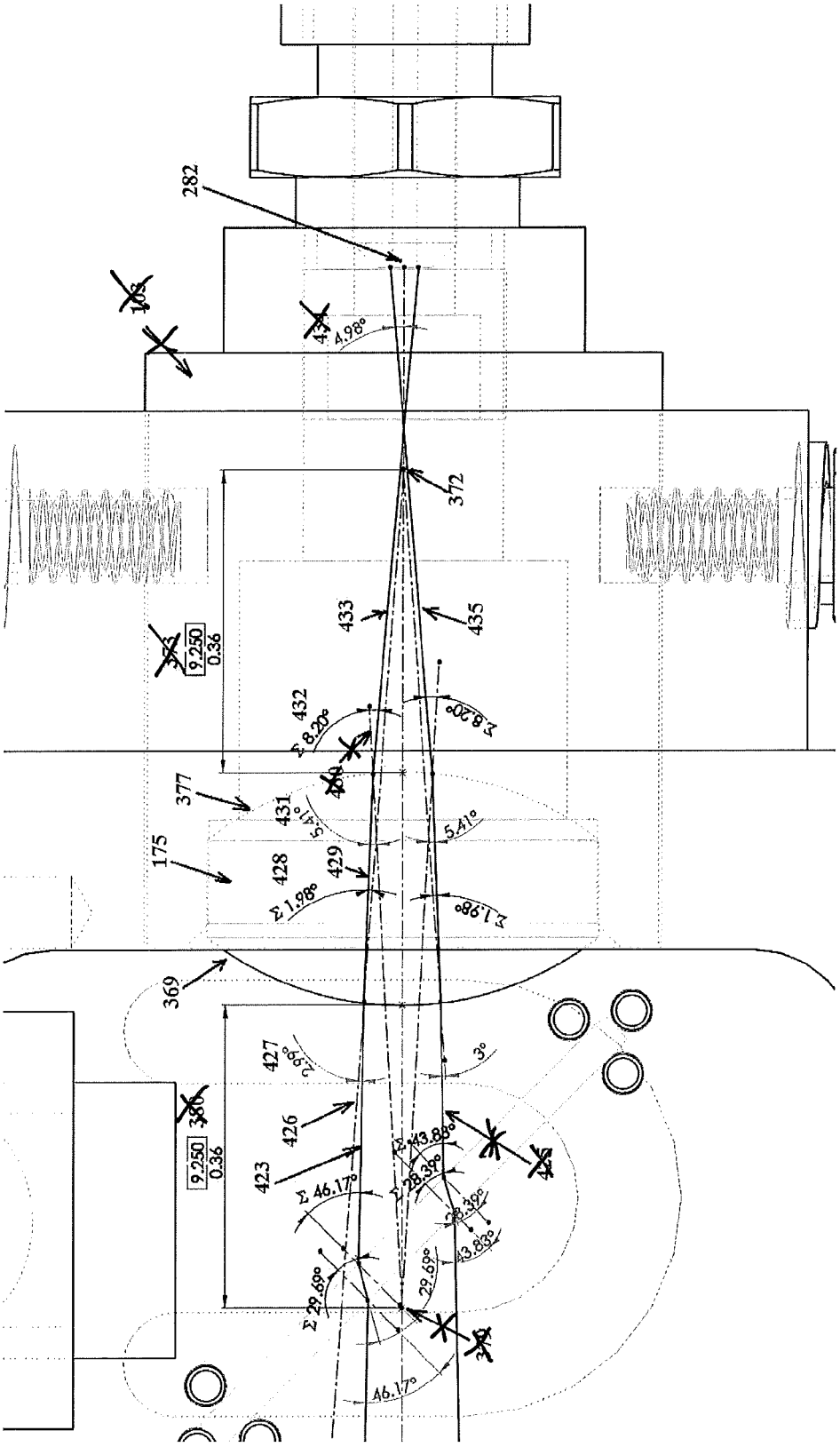
282
372
433
435
432
377
431
175
428
429
369
427
426
423
9.250
0.36
4.98°
8.20°
5.41°
1.98°
3°
43.88°
46.17°
29.69°
38.39°

Figure 4c

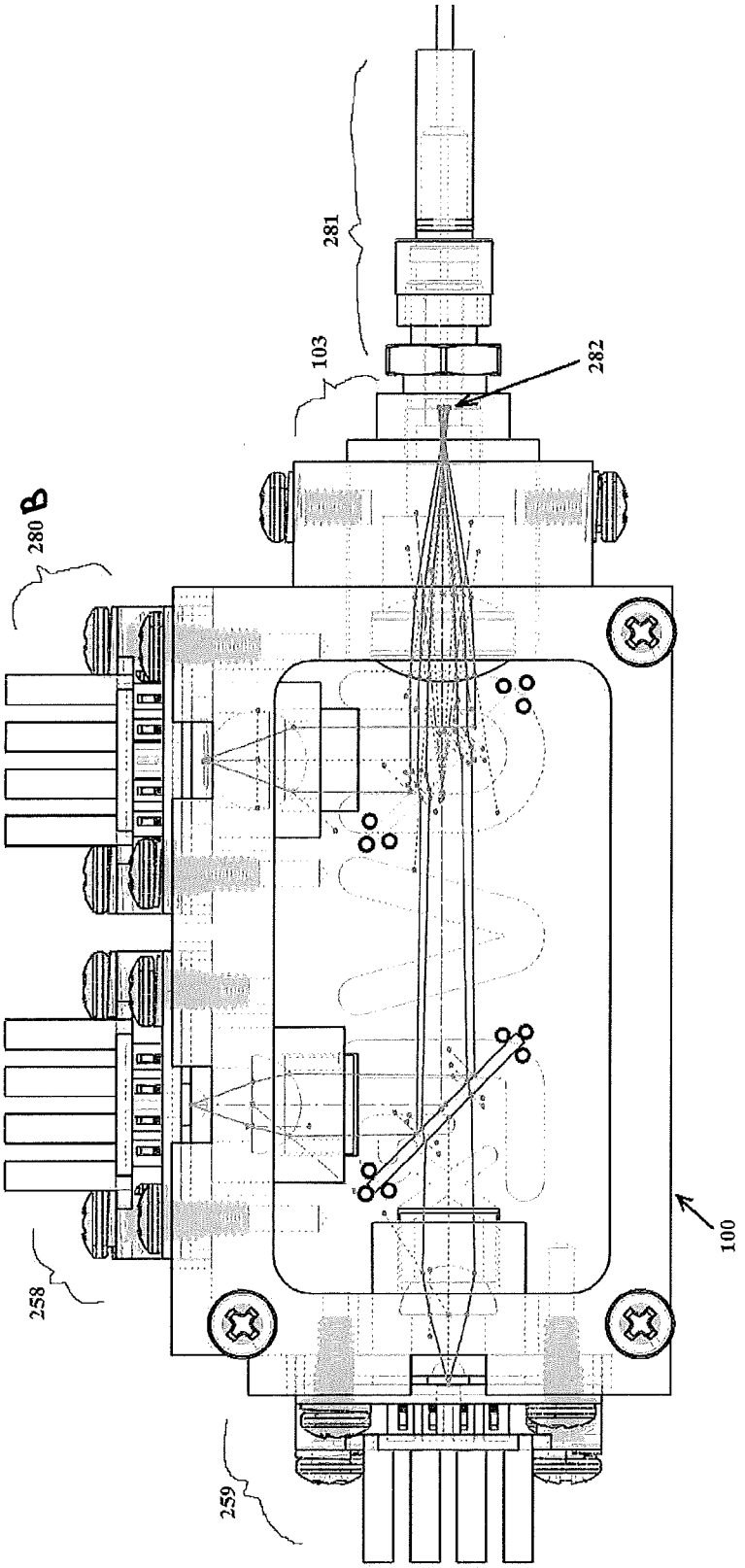

Figure 4d

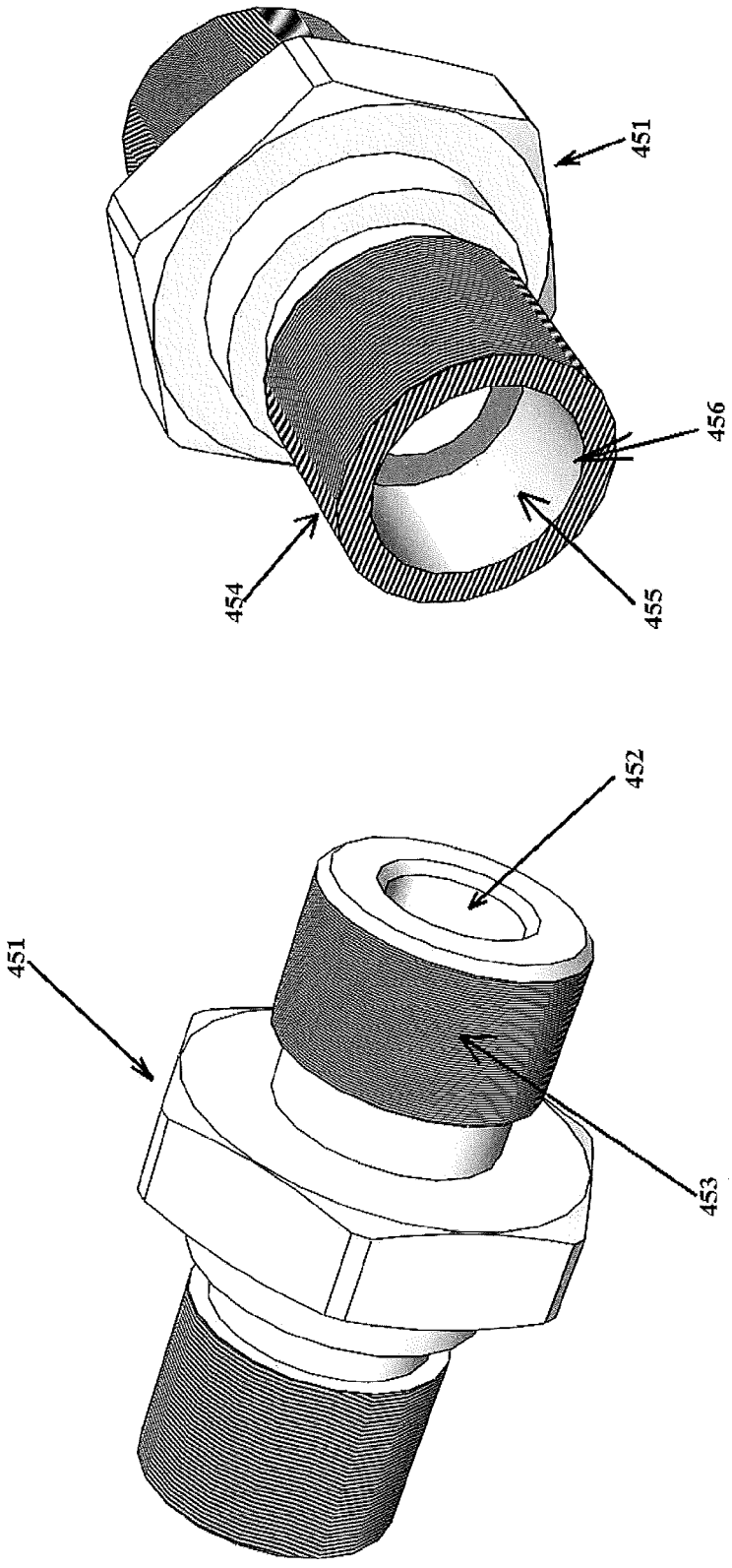

Figure 4e

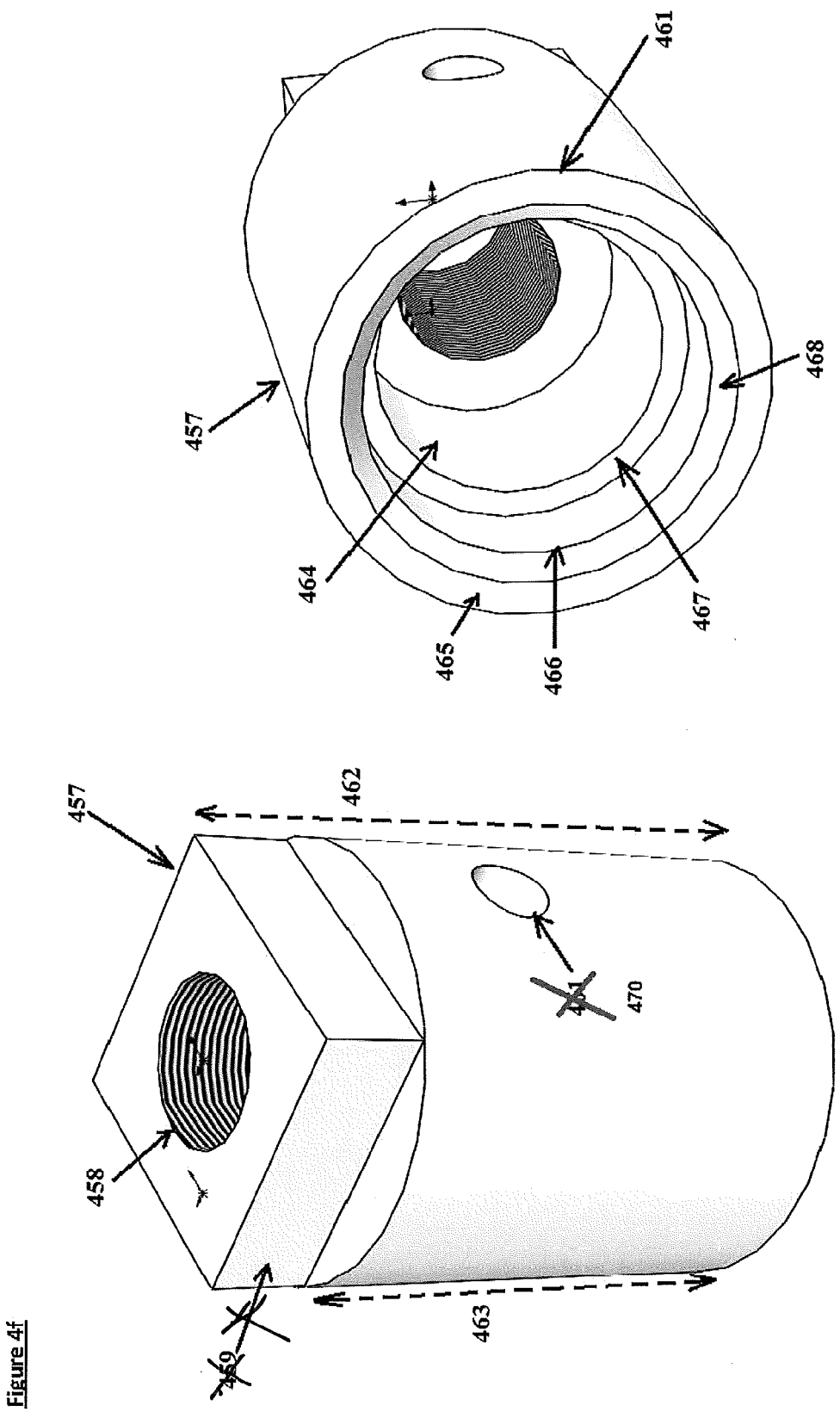

Figure 4f

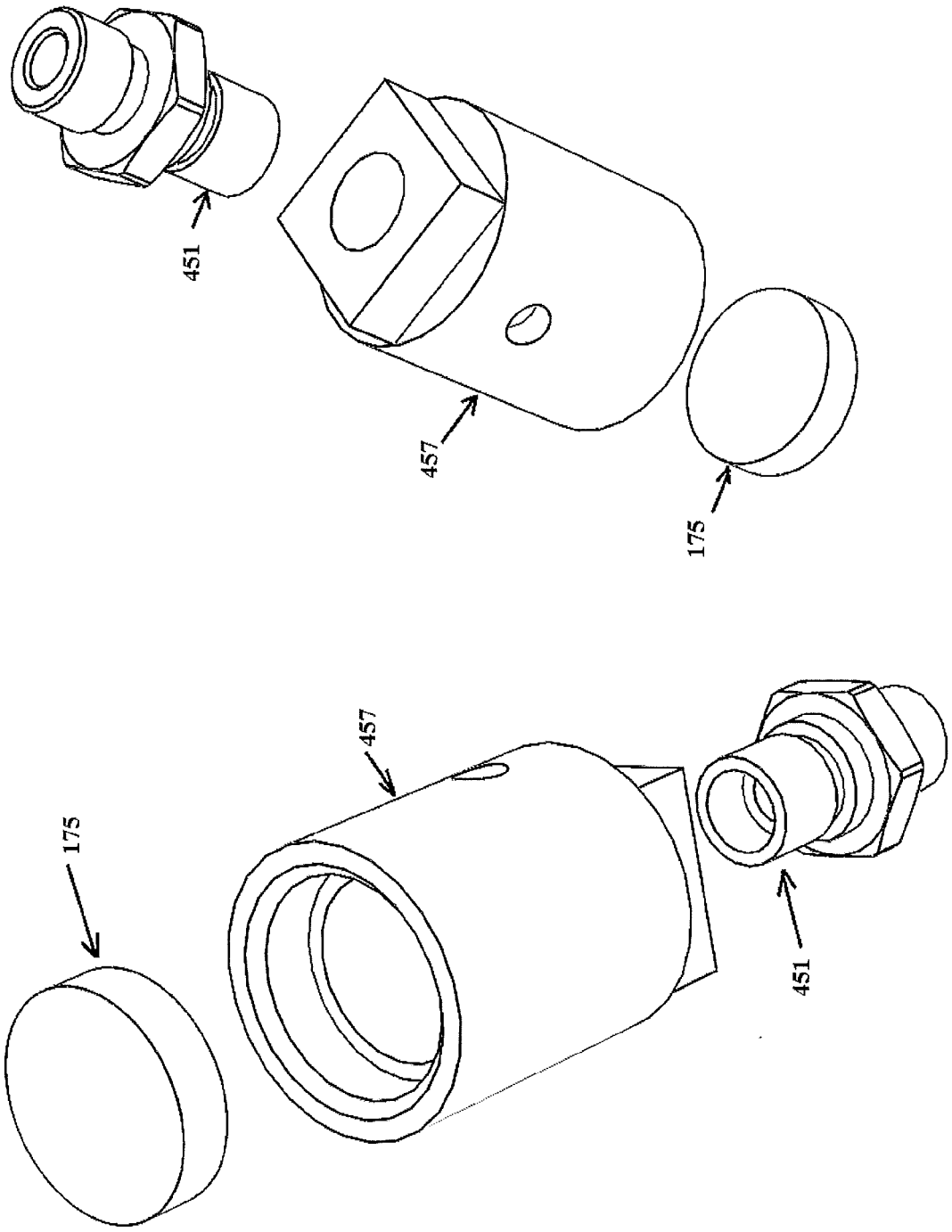

Figure 4g

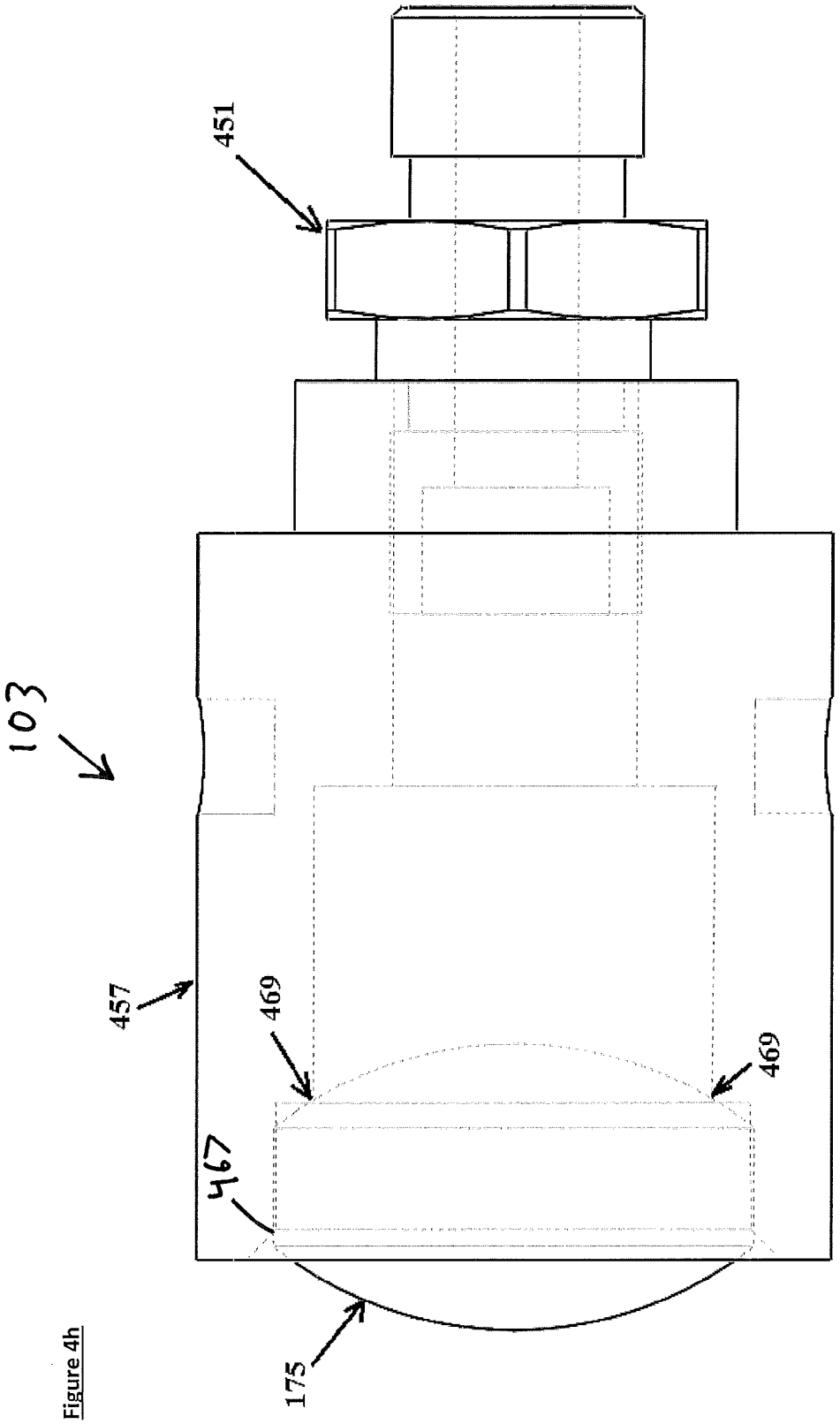

Figure 4h

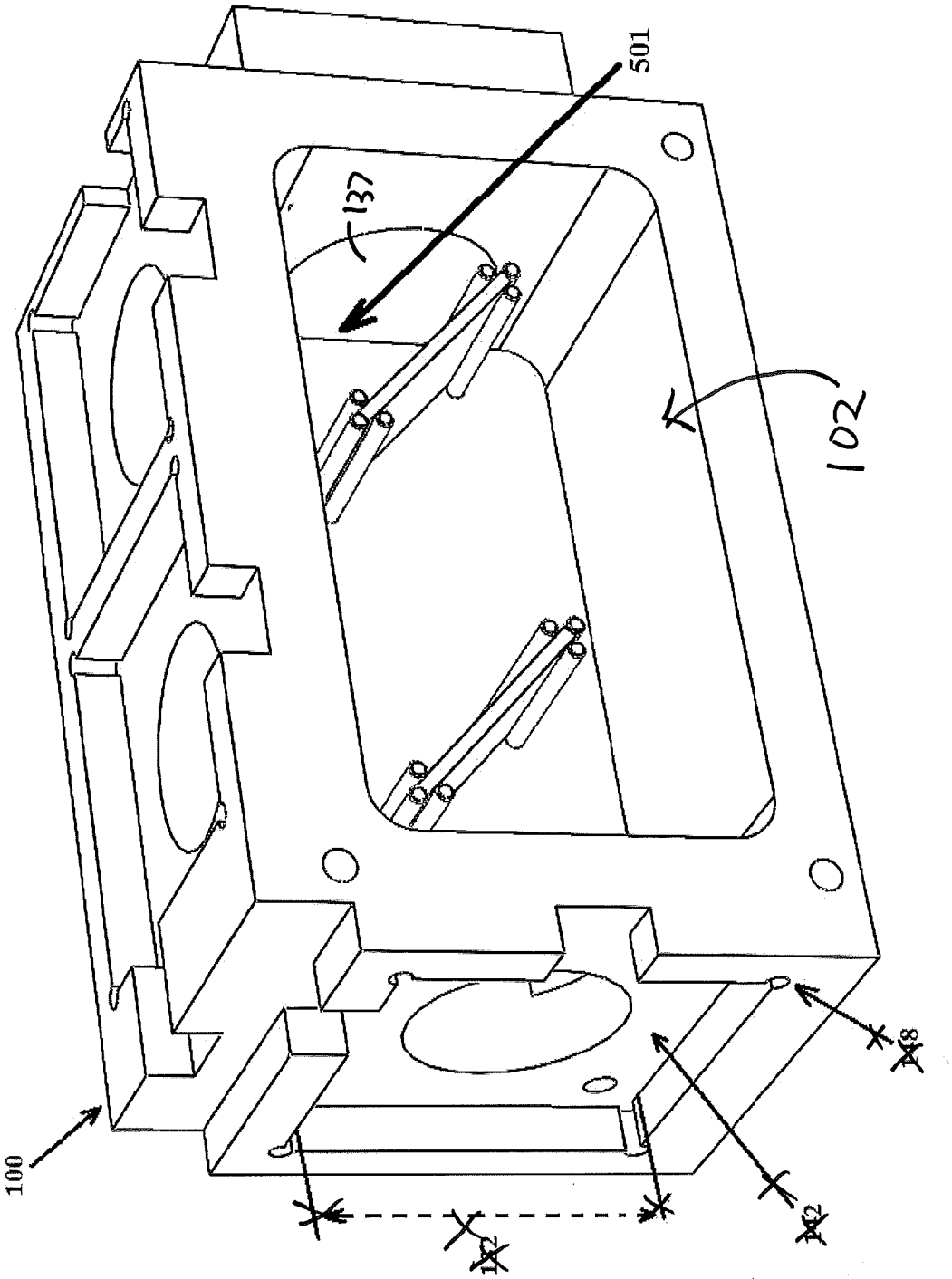

Figure 5a

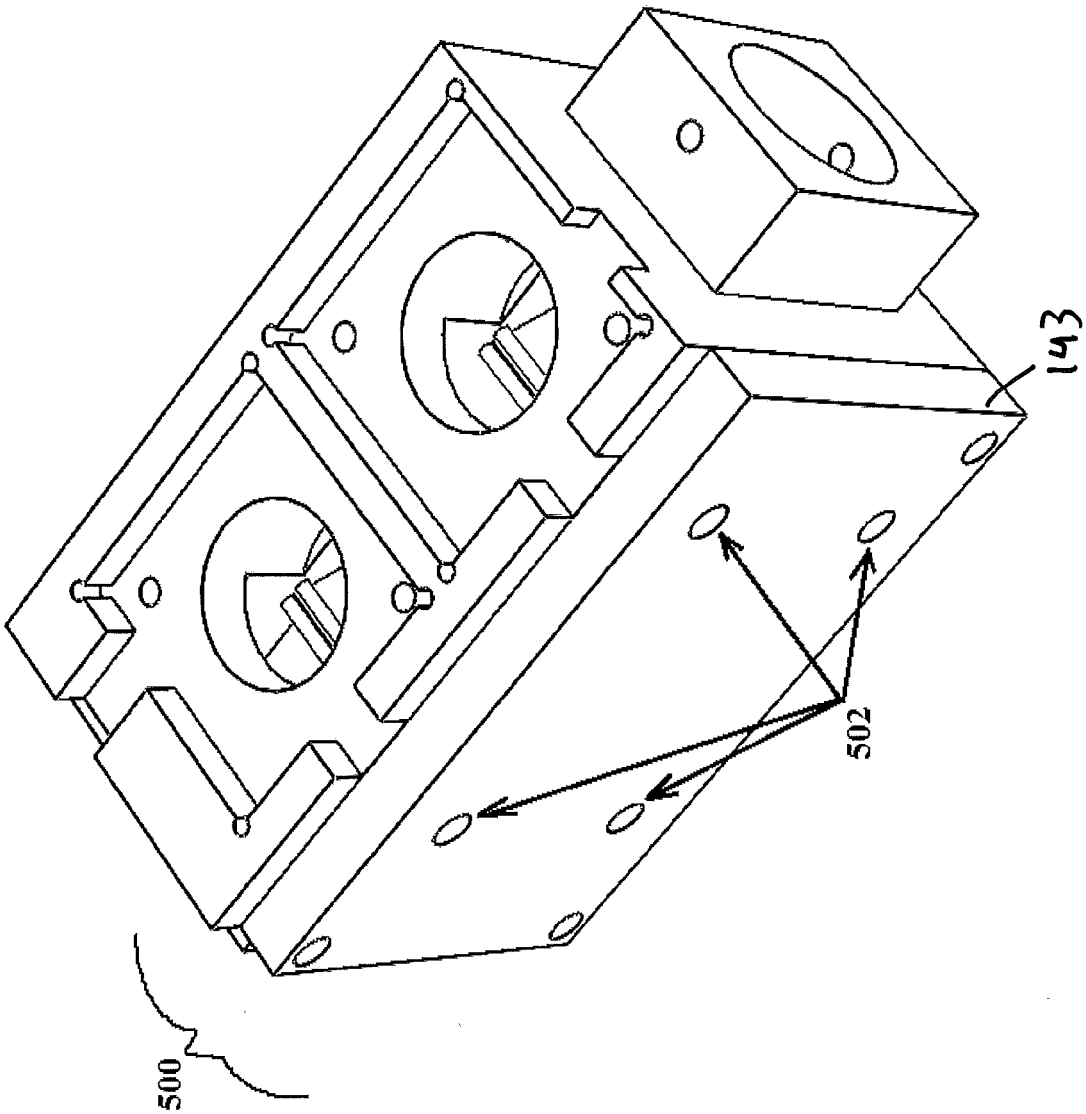

Figure 5b

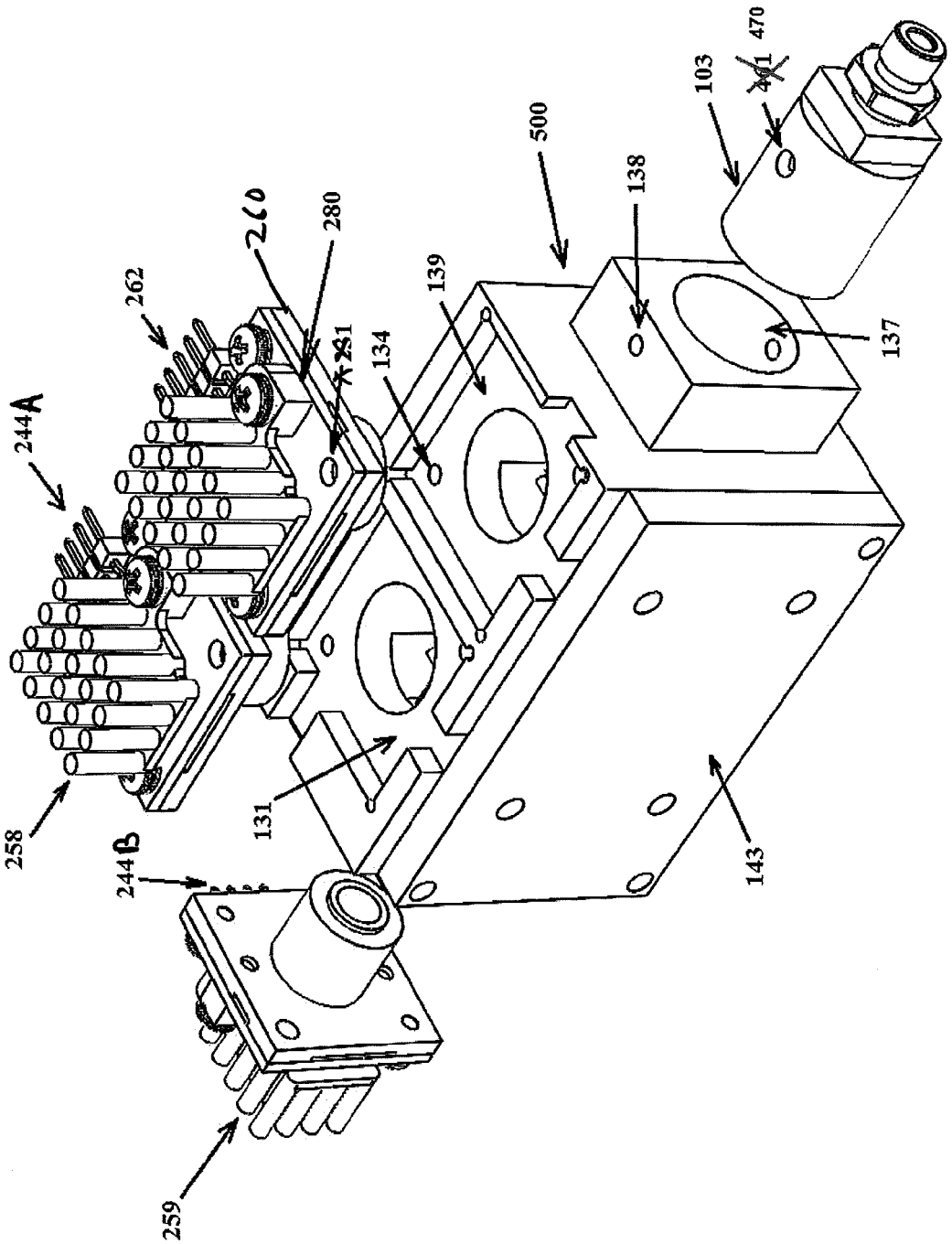

Figure 5c

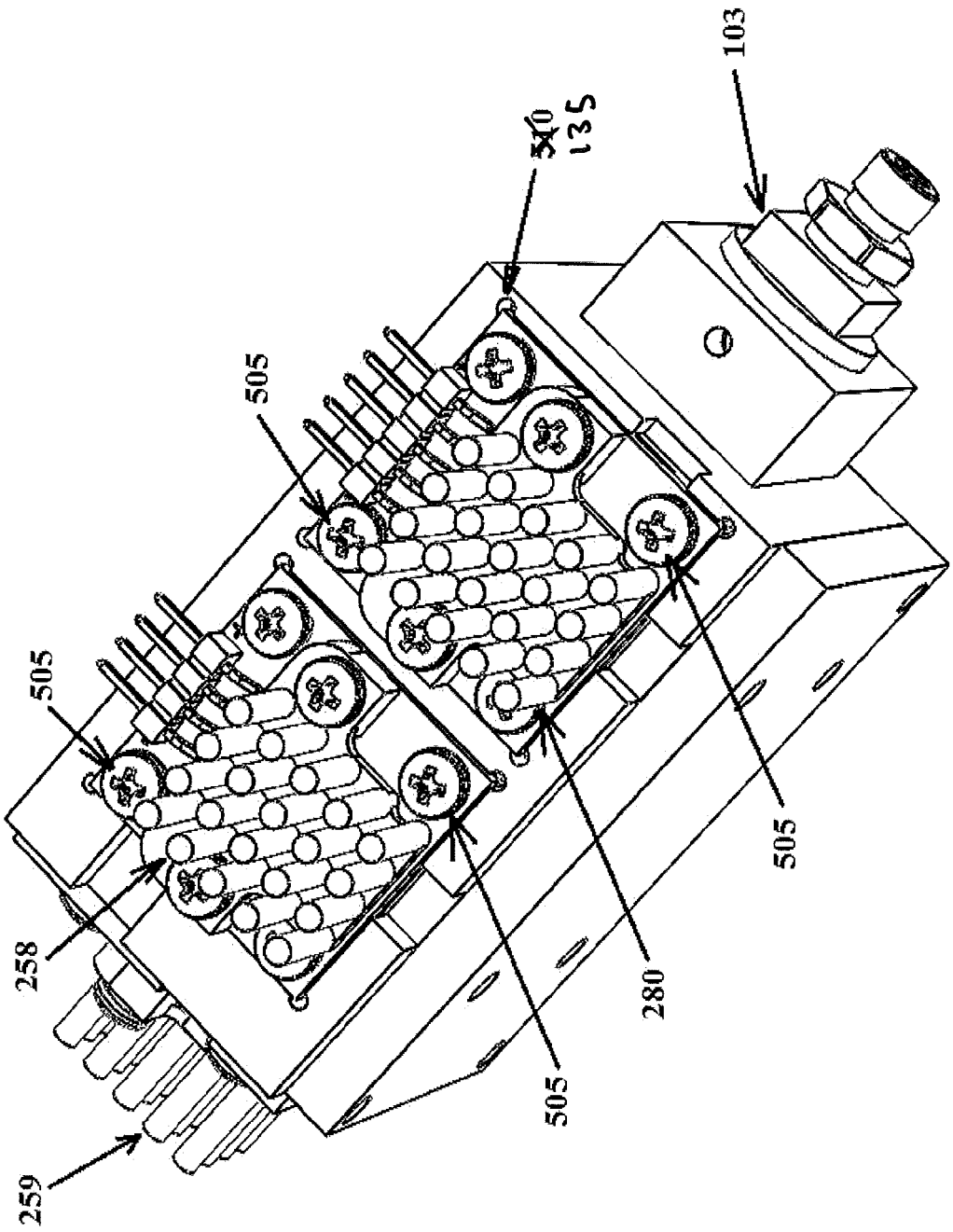

Figure 5d

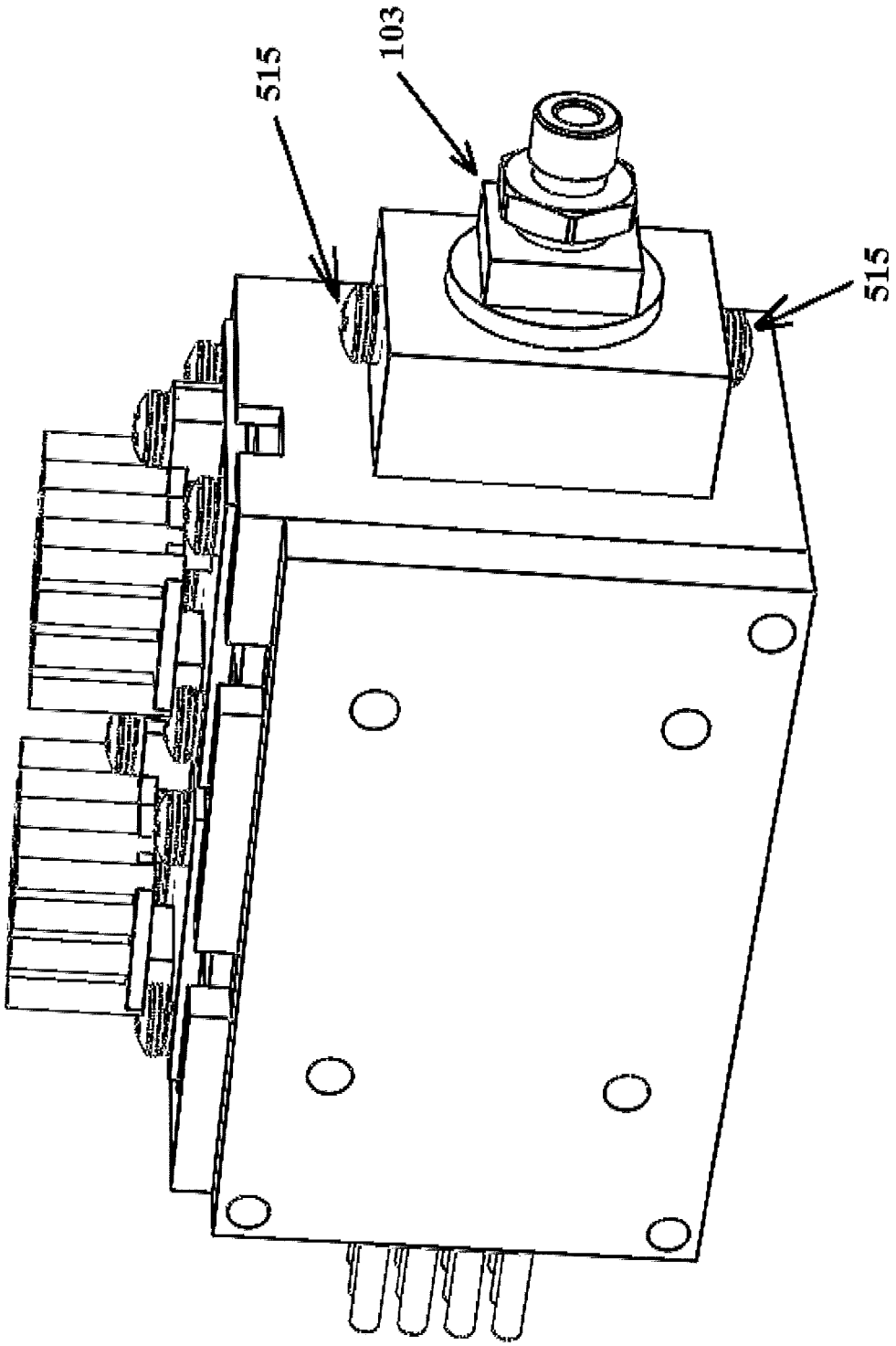

Figure 5e

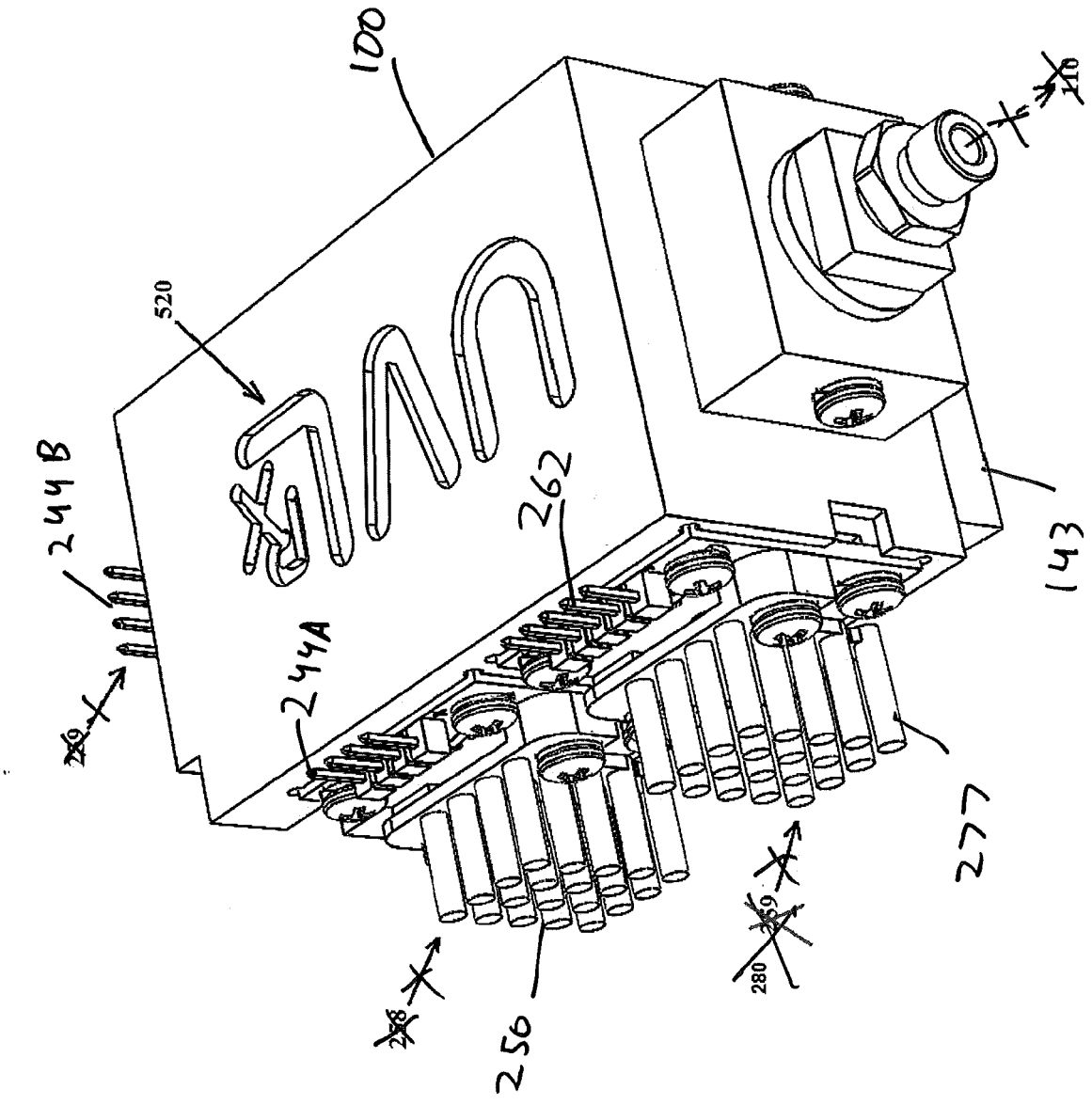

Figure 5f