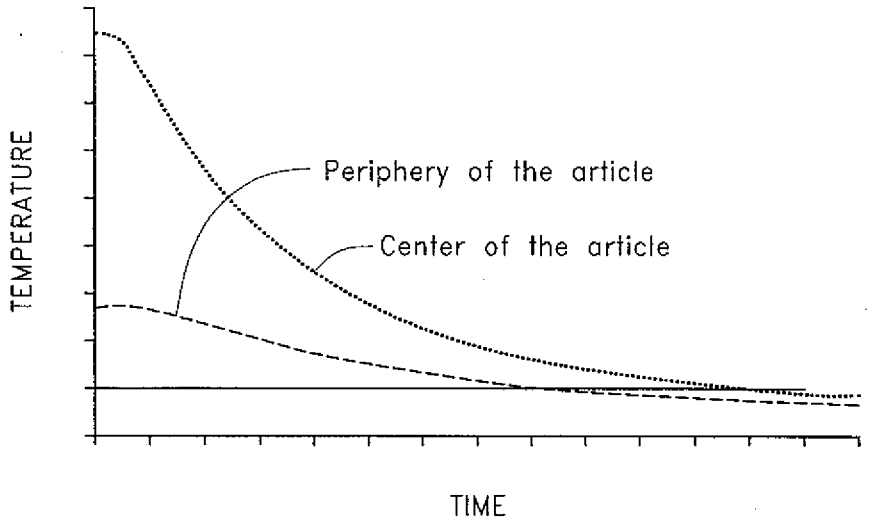

FIG. 1
(PRIOR ART)

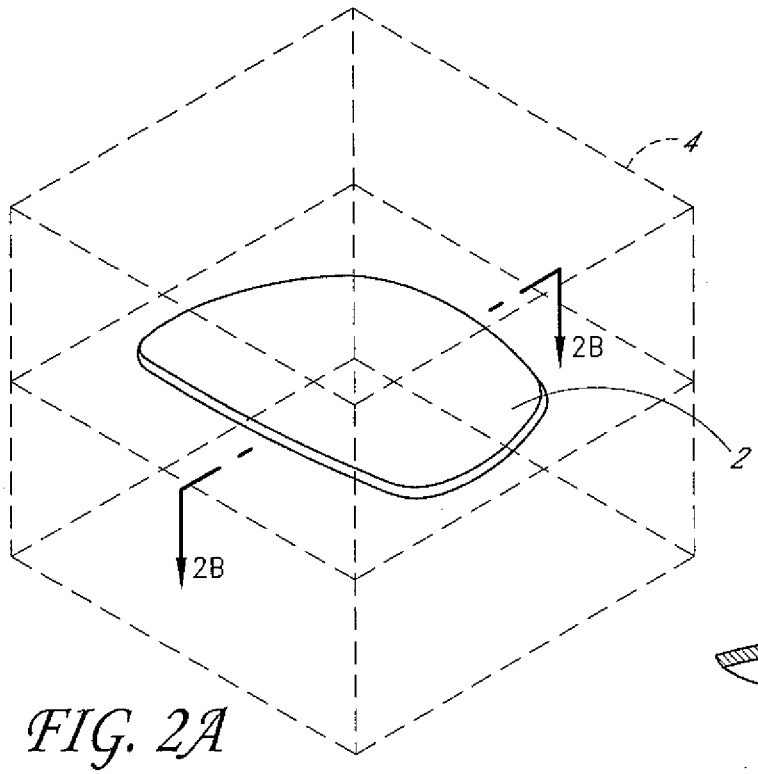

FIG. 2A
(PRIOR ART)

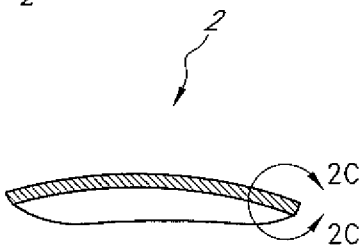

FIG. 2B
(PRIOR ART)

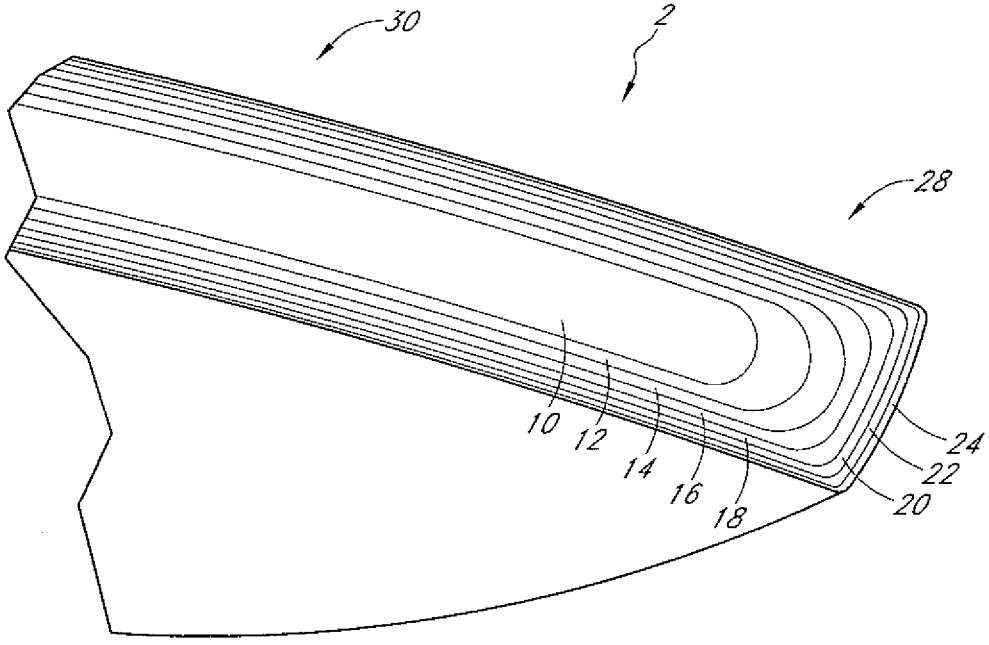

FIG. 2C
(PRIOR ART)

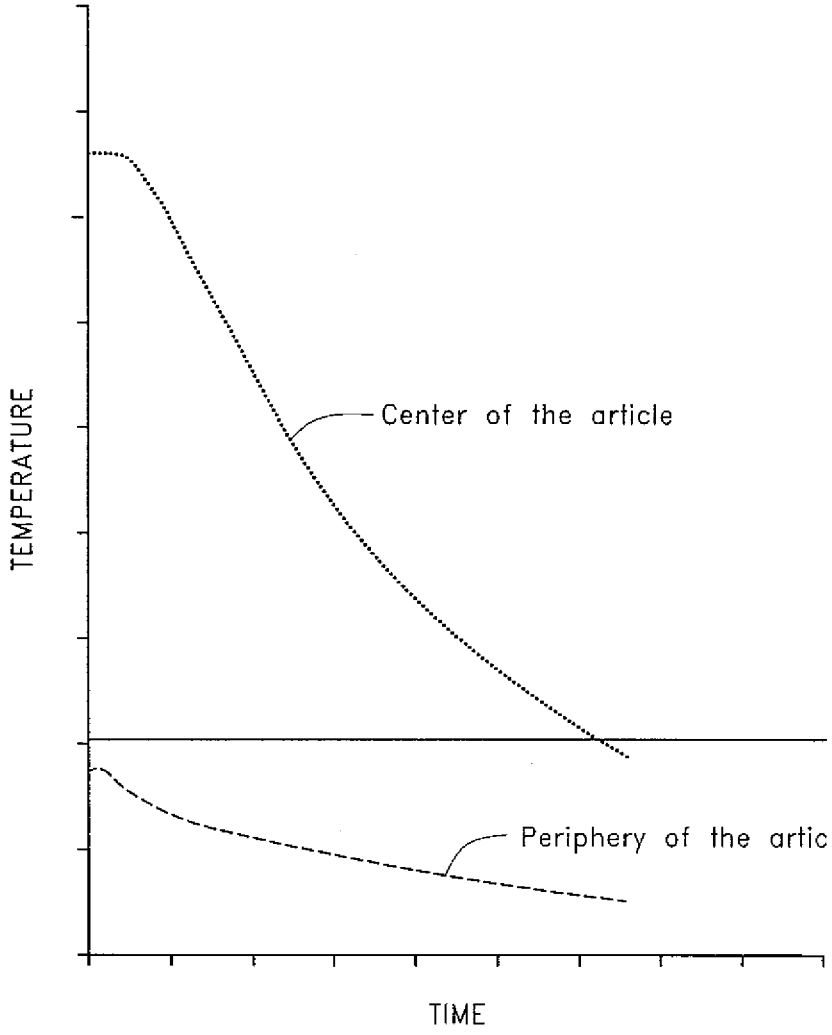

FIG. 3
(PRIOR ART)

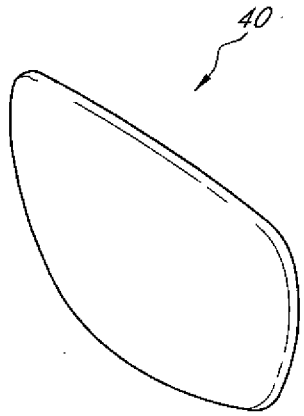

FIG. 4
(PRIOR ART)

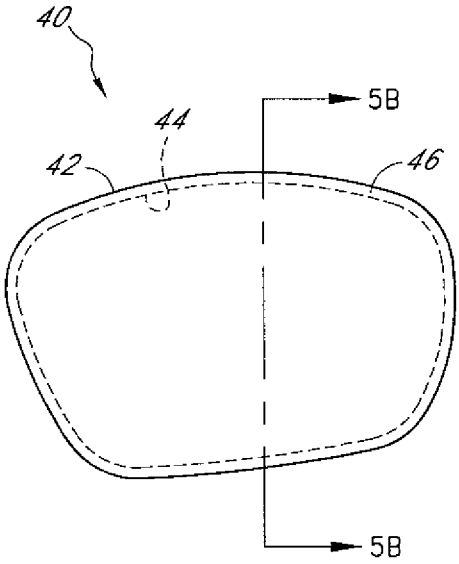

FIG. 5A
(PRIOR ART)

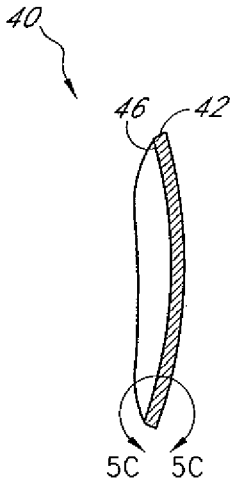

FIG. 5B
(PRIOR ART)

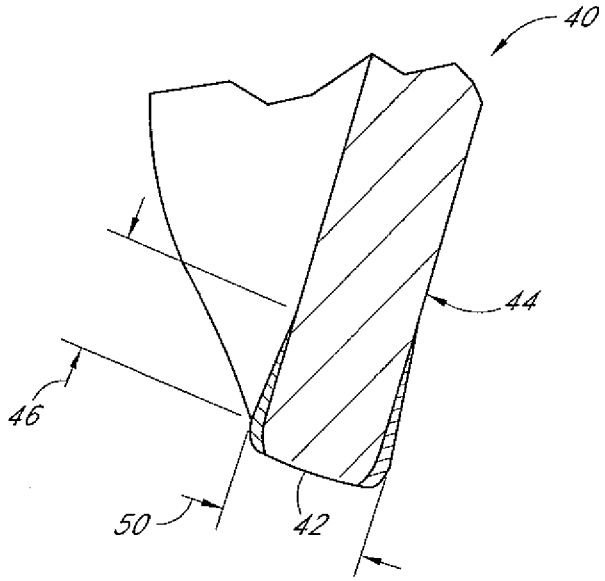

FIG. 5C
(PRIOR ART)

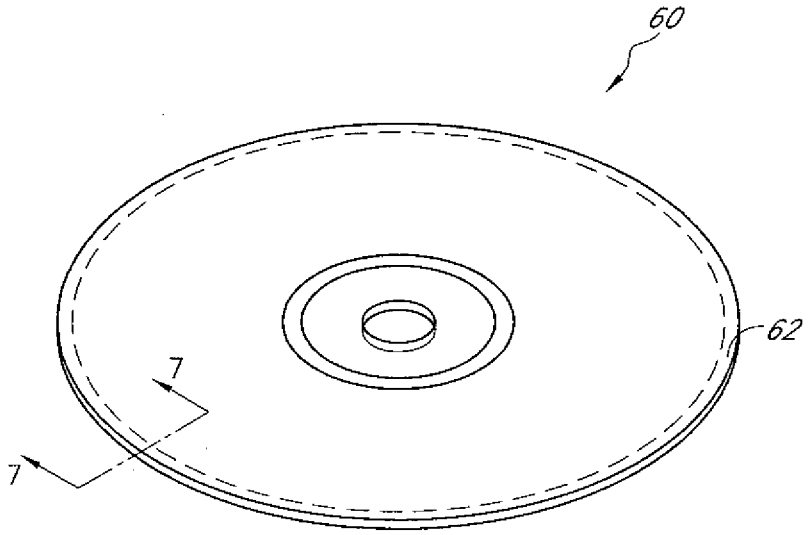

FIG. 6
(PRIOR ART)

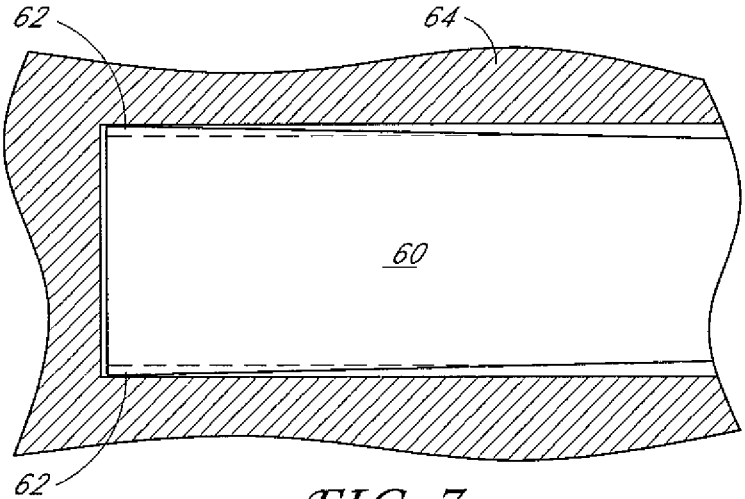

FIG. 7
(PRIOR ART)

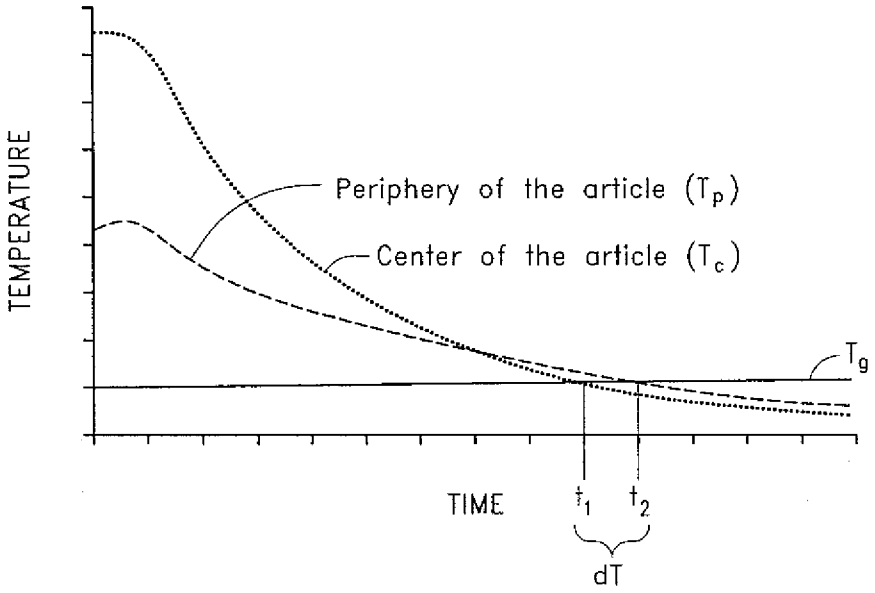
TEMPERATURE
Periphery of the article (T_p)
Center of the article (T_c)
T_g
TIME
t_1
t_2
dT

FIG. 8

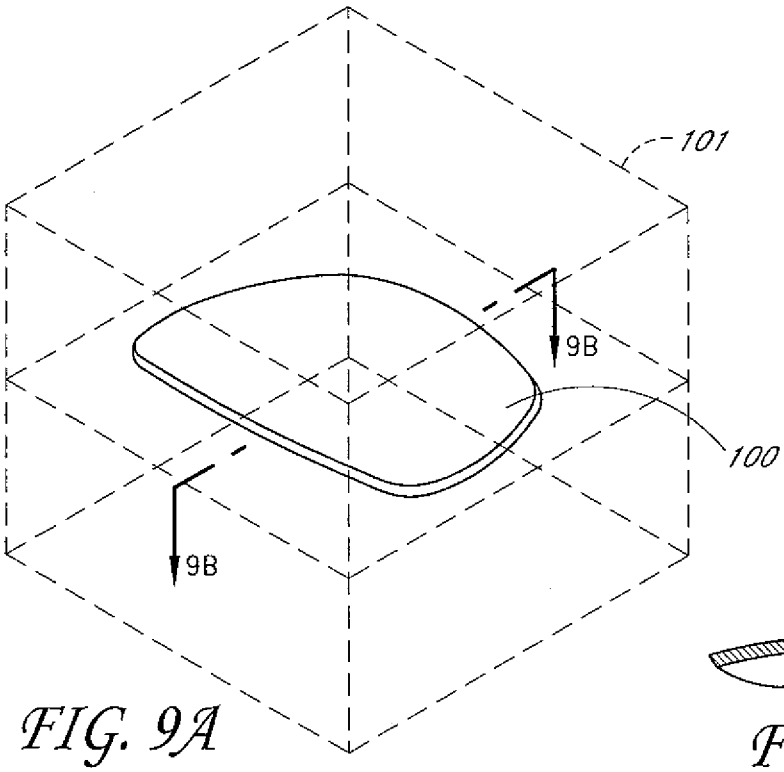

FIG. 9A

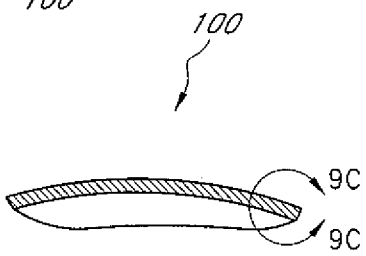

FIG. 9B

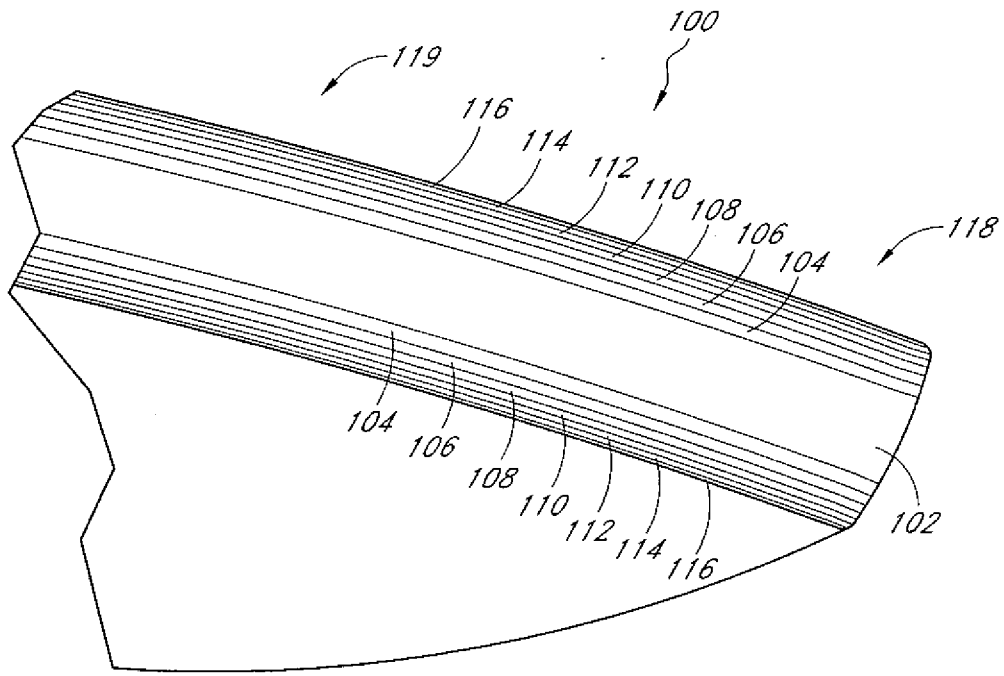

FIG. 9C

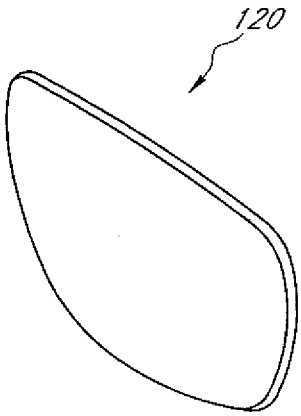

FIG. 10

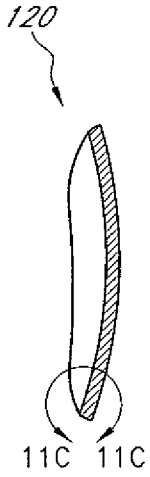

FIG. 11B

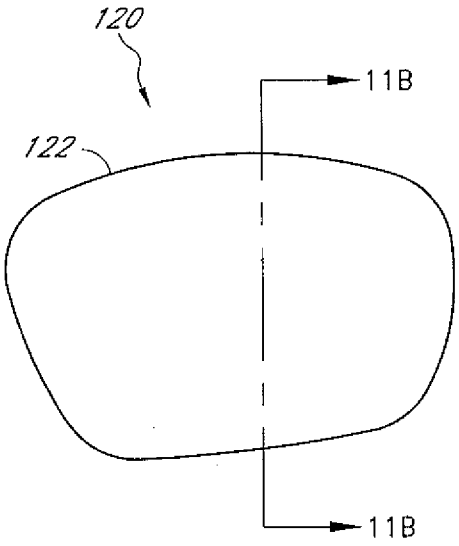

FIG. 11A

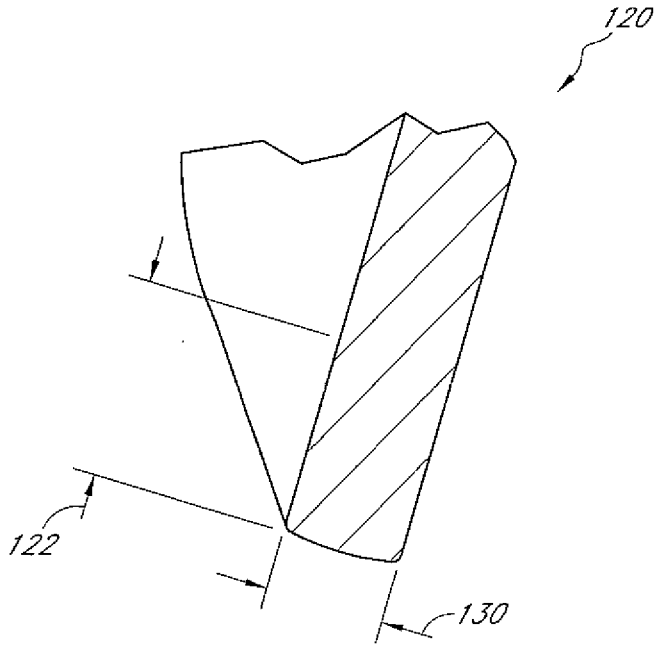

FIG. 11C

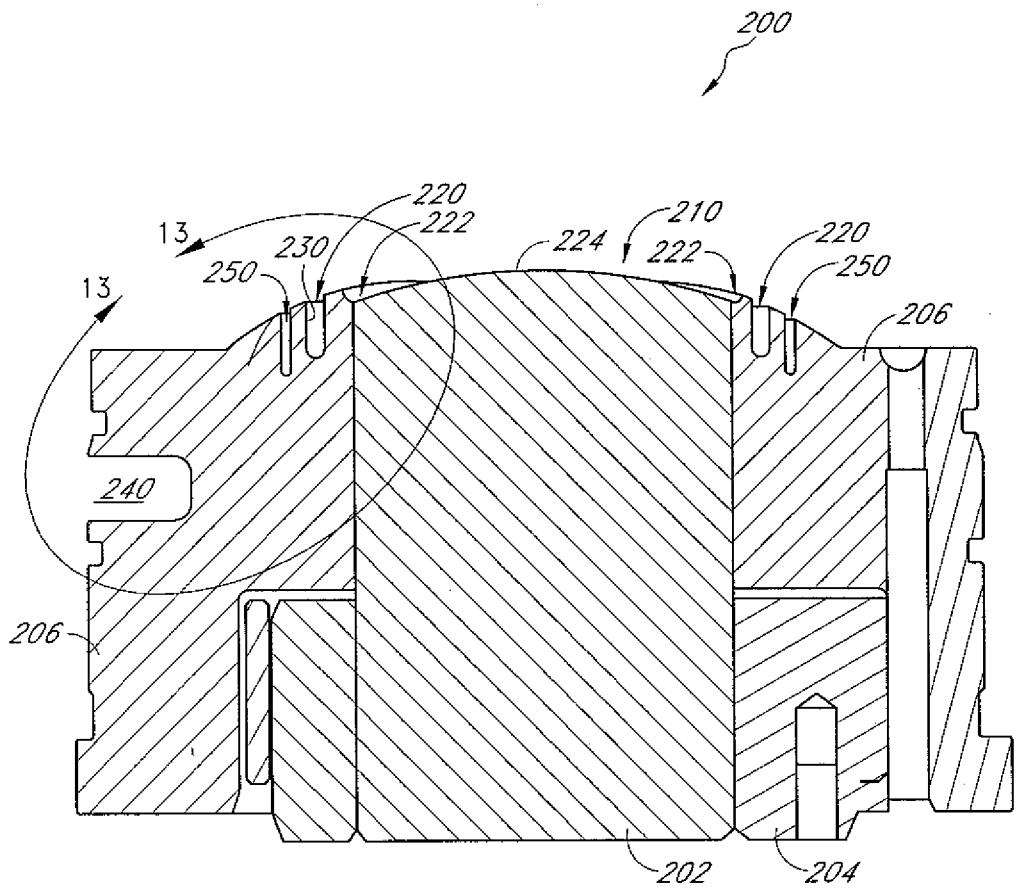

FIG. 12

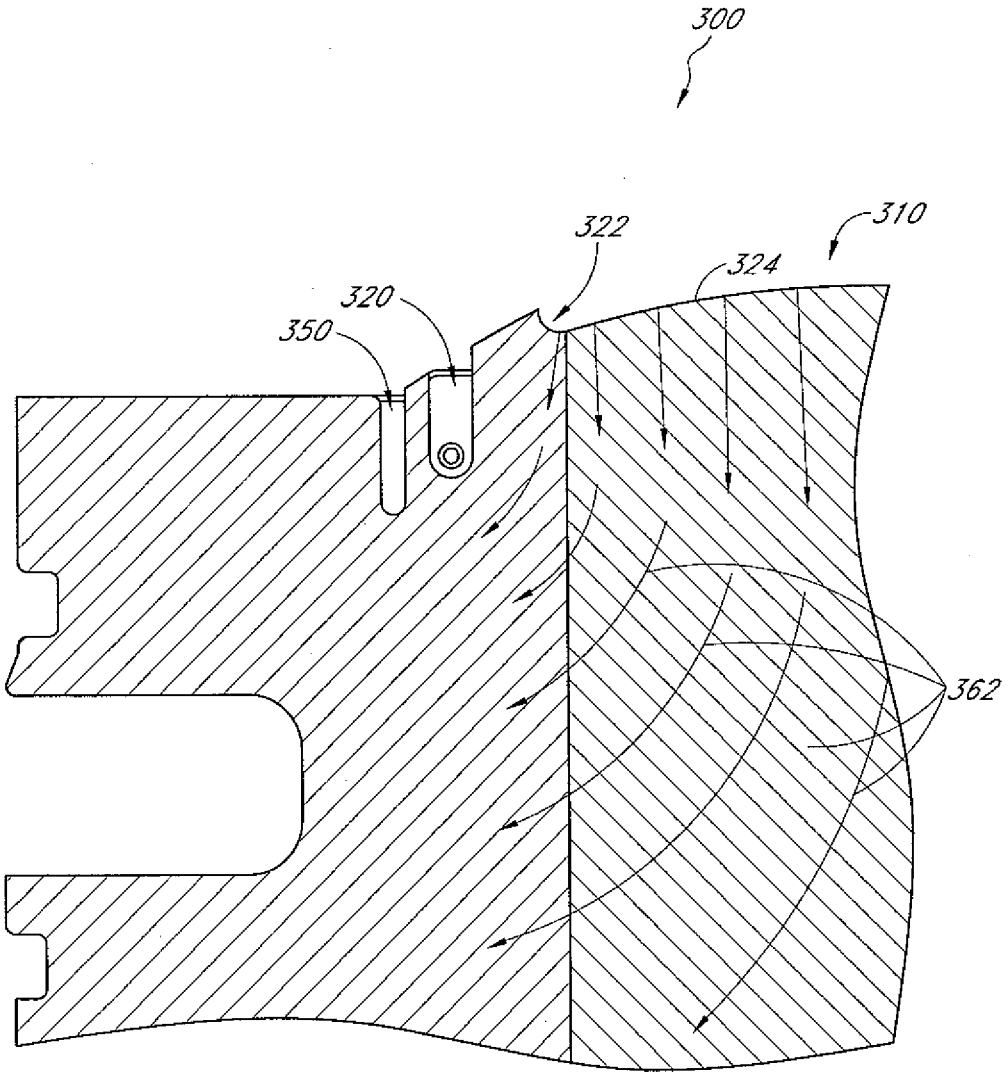

FIG. 13