FIG. 1

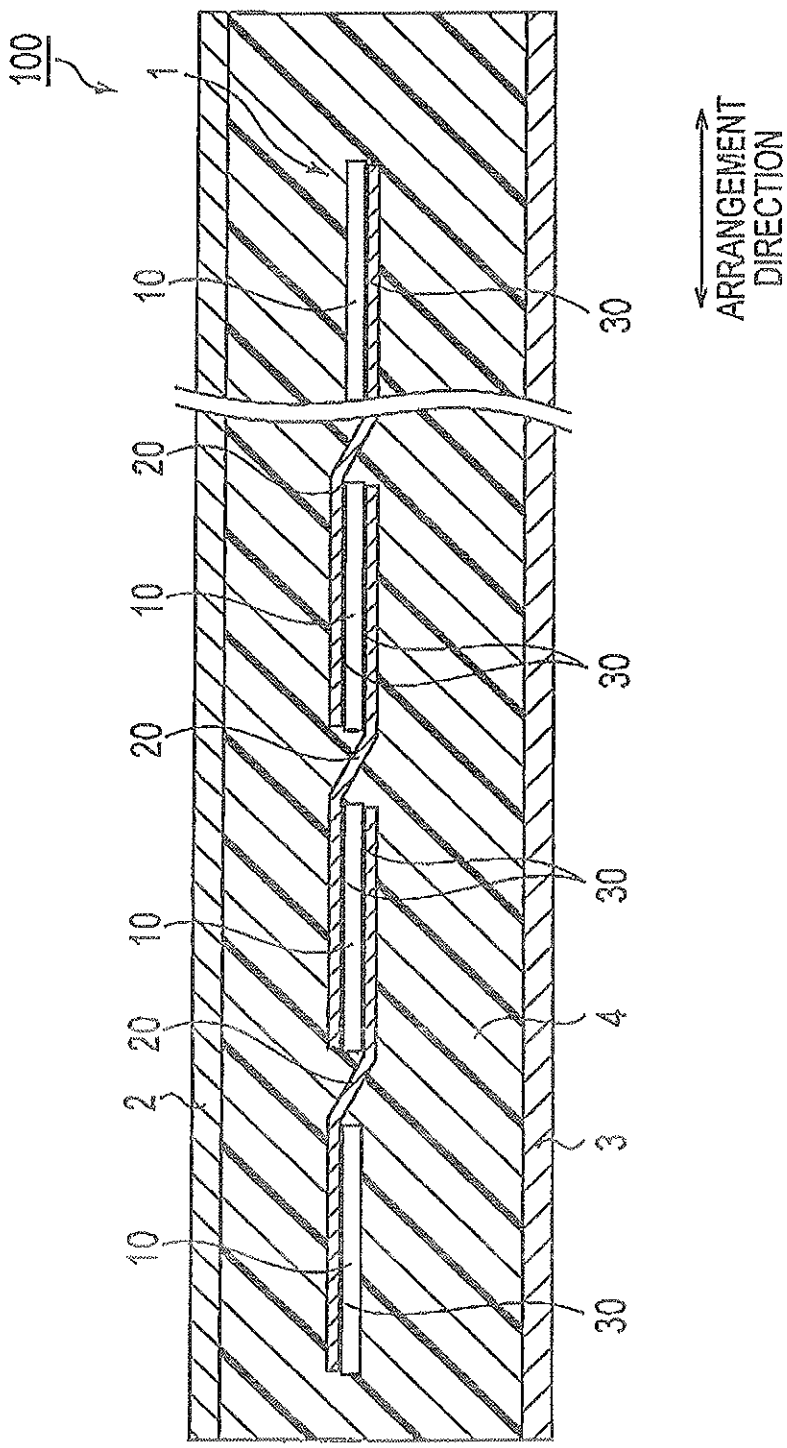

FIG. 2

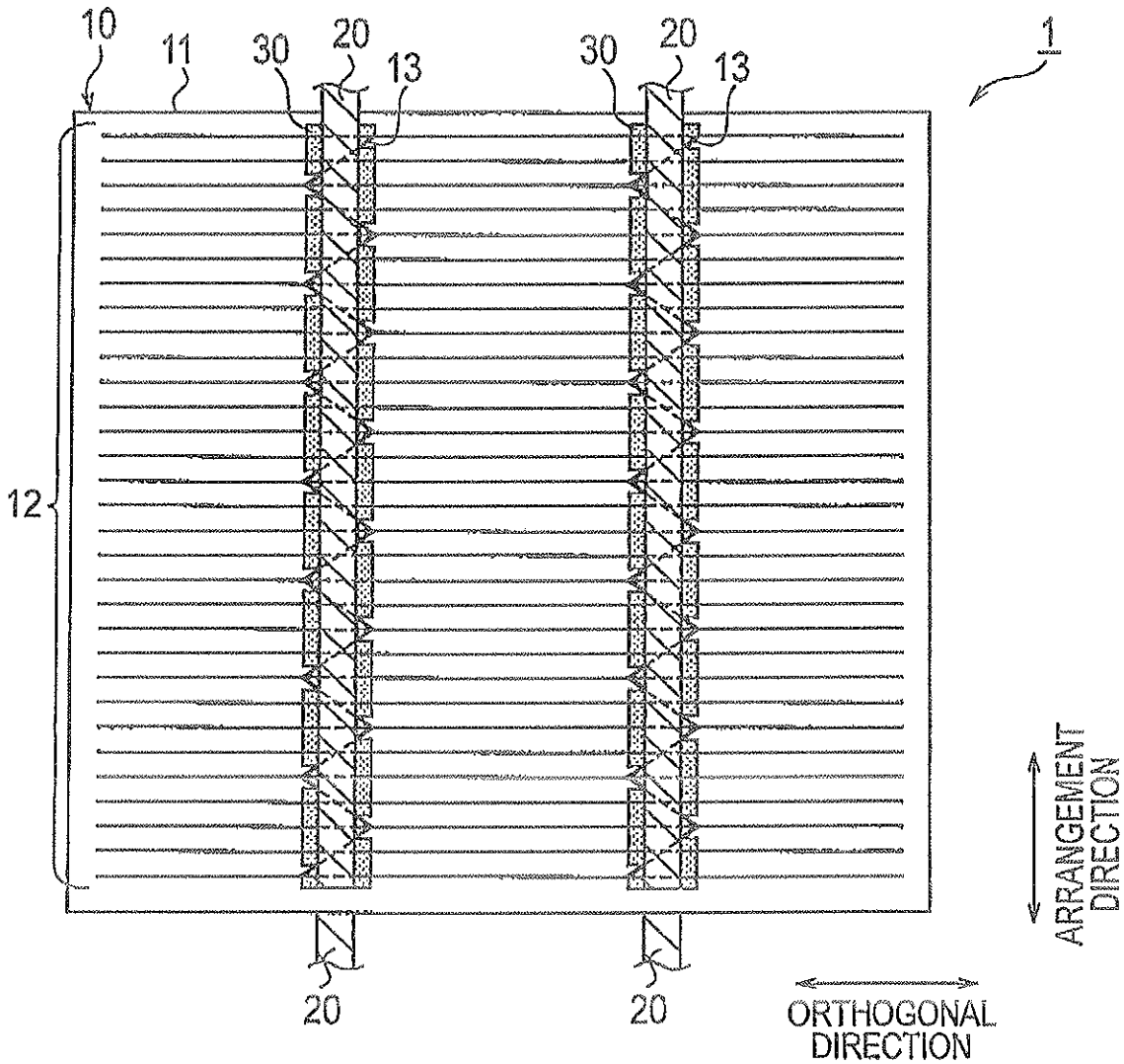
10
11
30
20
13
30
20
13
1
12
20
20
ARRANGEMENT DIRECTION
ORTHOGONAL DIRECTION

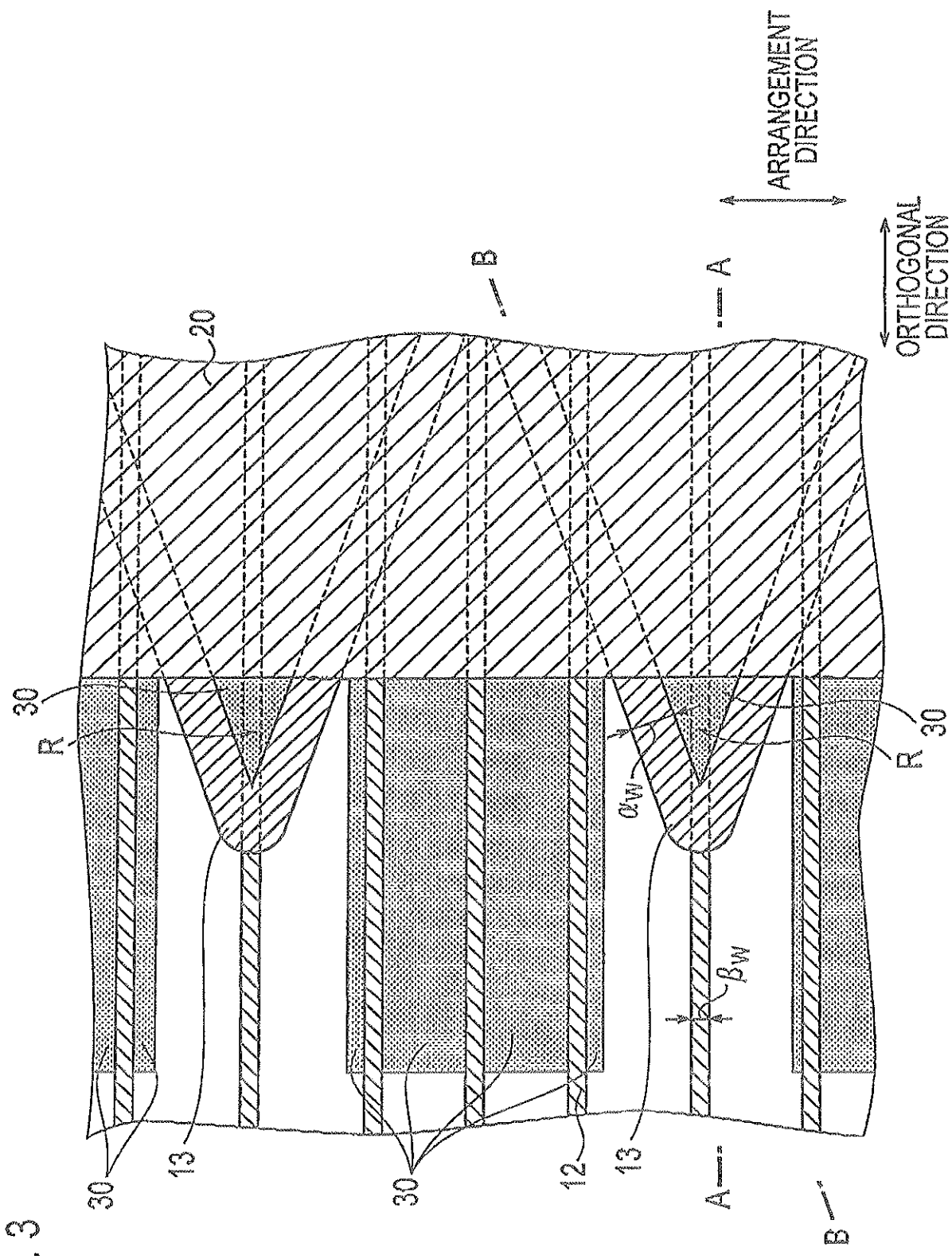
ARRANGEMENT DIRECTION
ORTHOGONAL DIRECTION
B
A
20
30
R
13
12
α_W
β_W
t
A
B

FIG. 3

FIG. 4

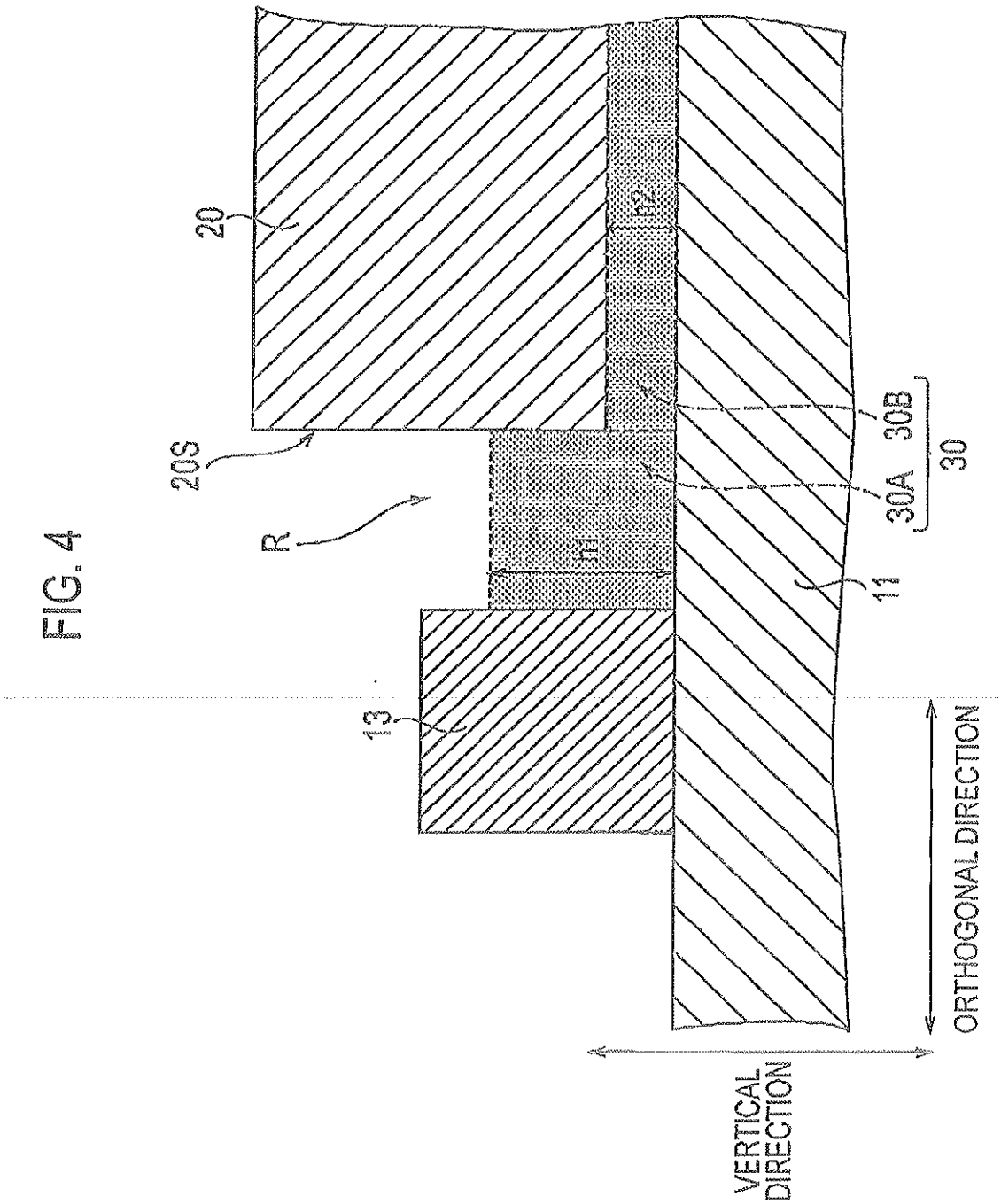
20
20S
R
H1
H2
30
30A
30B
11
13
VERTICAL DIRECTION
ORTHOGONAL DIRECTION

FIG. 5

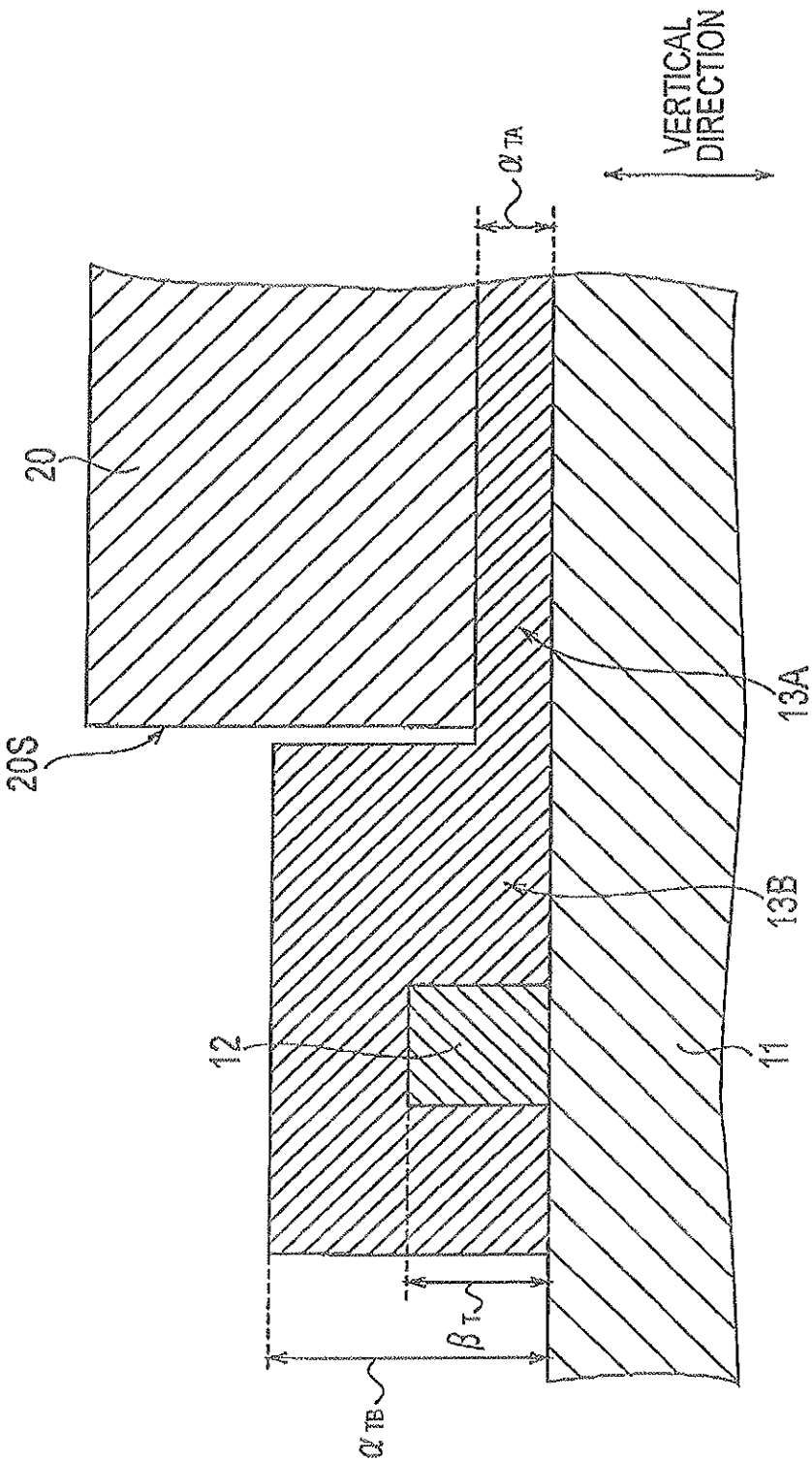
VERTICAL DIRECTION
α_{TA}
20
20S
13A
13B
12
11
β_T
α_{TB}

FIG. 6

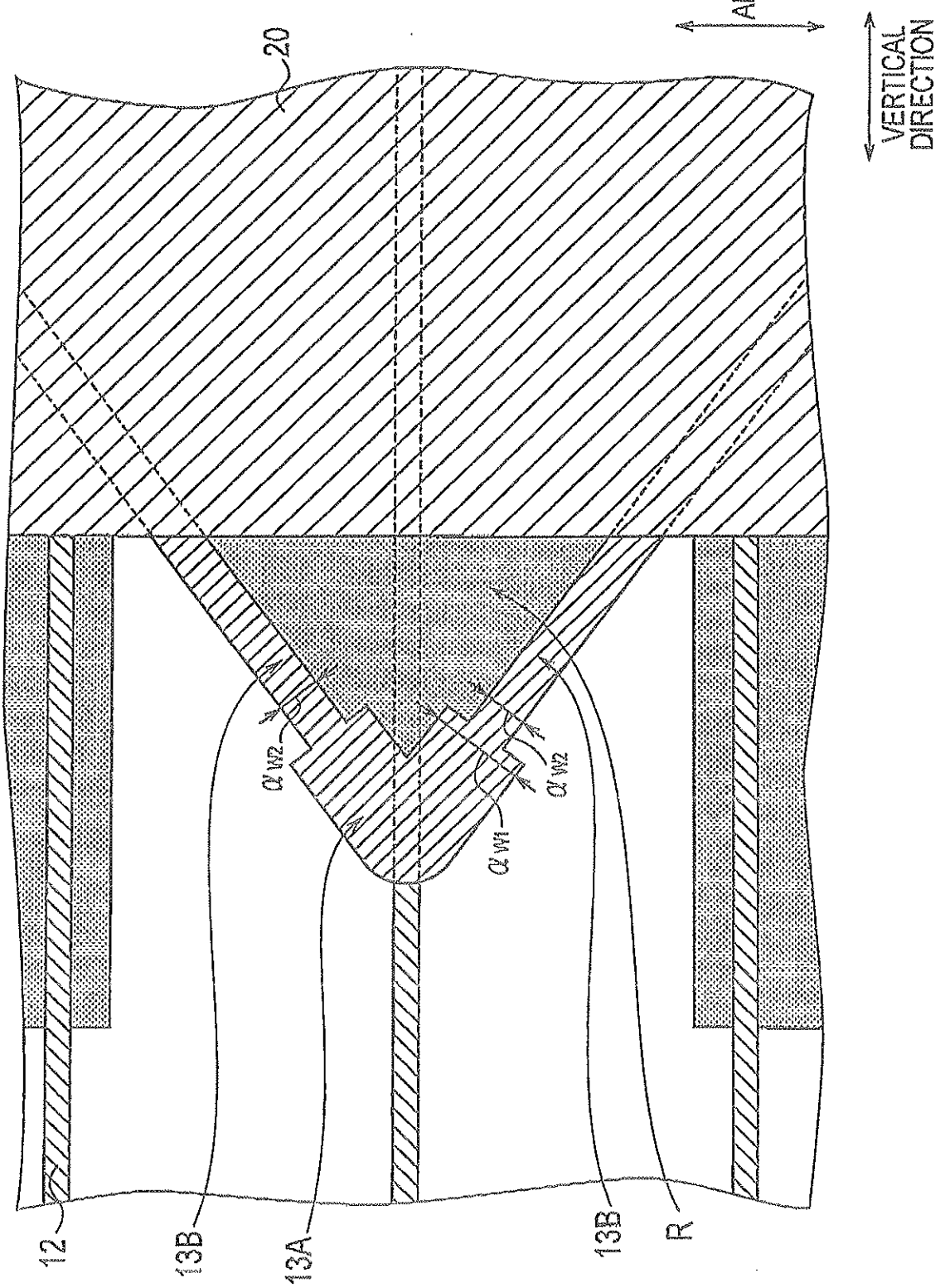
20
ARRANGEMENT DIRECTION
VERTICAL DIRECTION
W2
W1
W2
W2
12
13B
13A
13B
R

FIG. 7

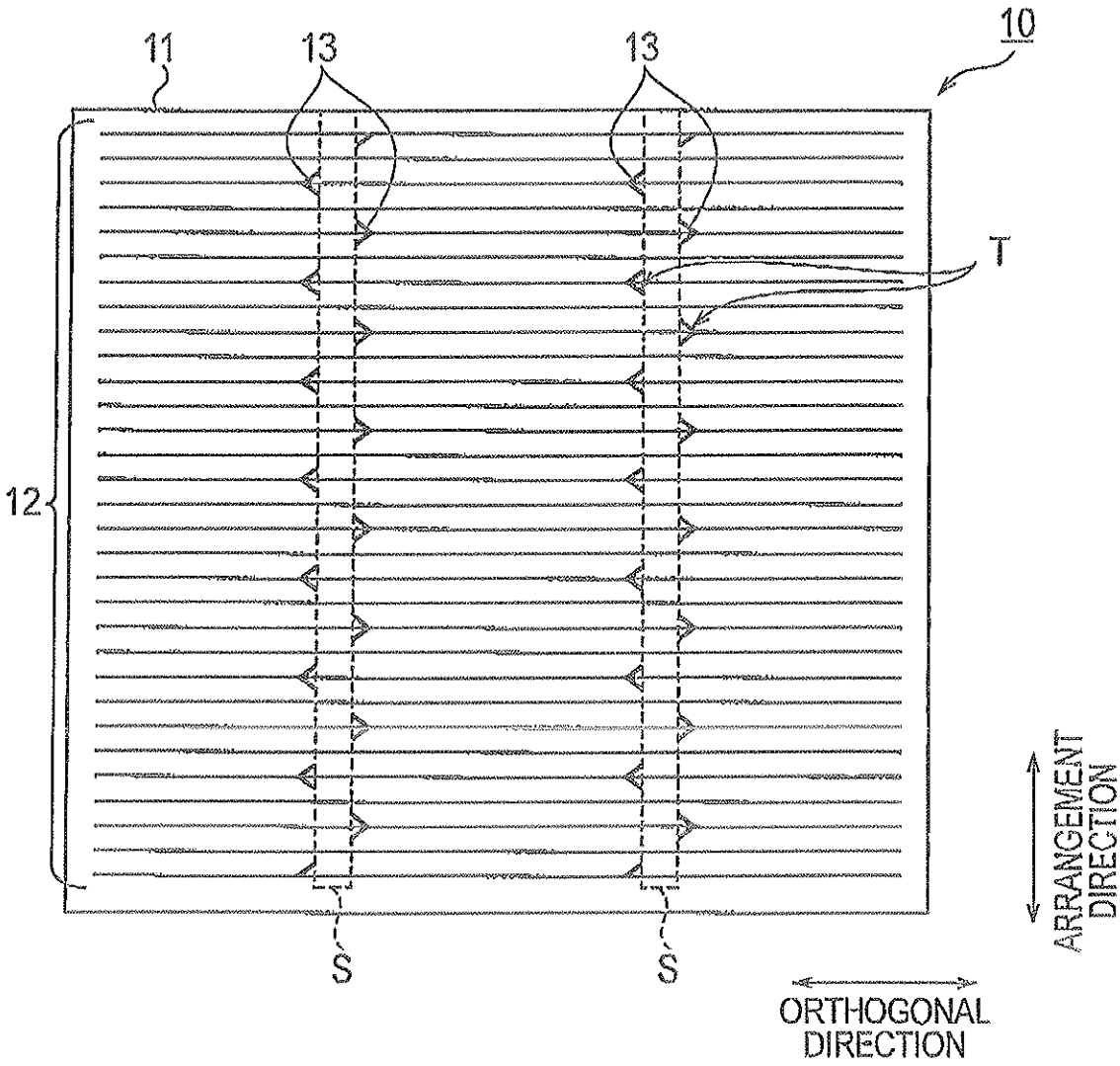
11
13
13
10
T
12
S
S
ARRANGEMENT DIRECTION
ORTHOGONAL DIRECTION

FIG. 8

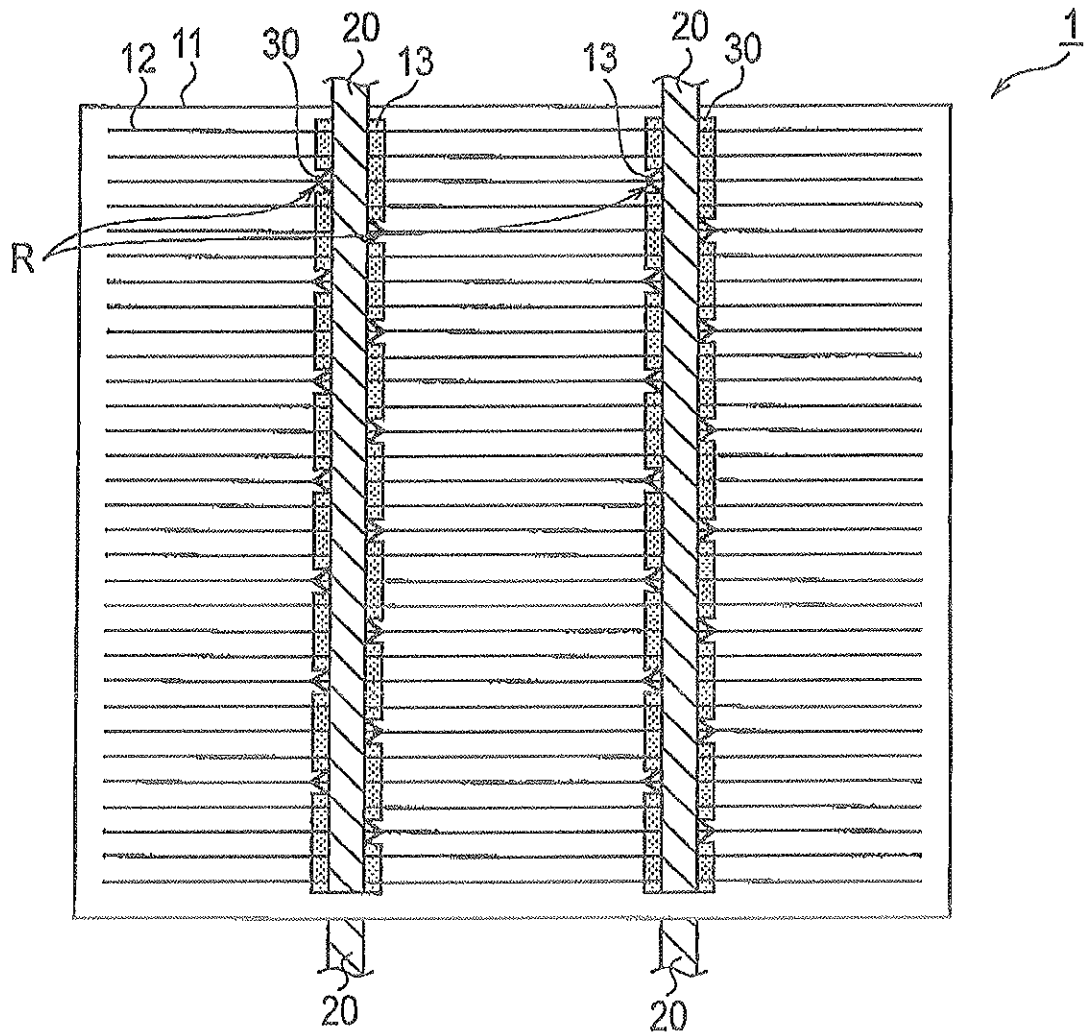

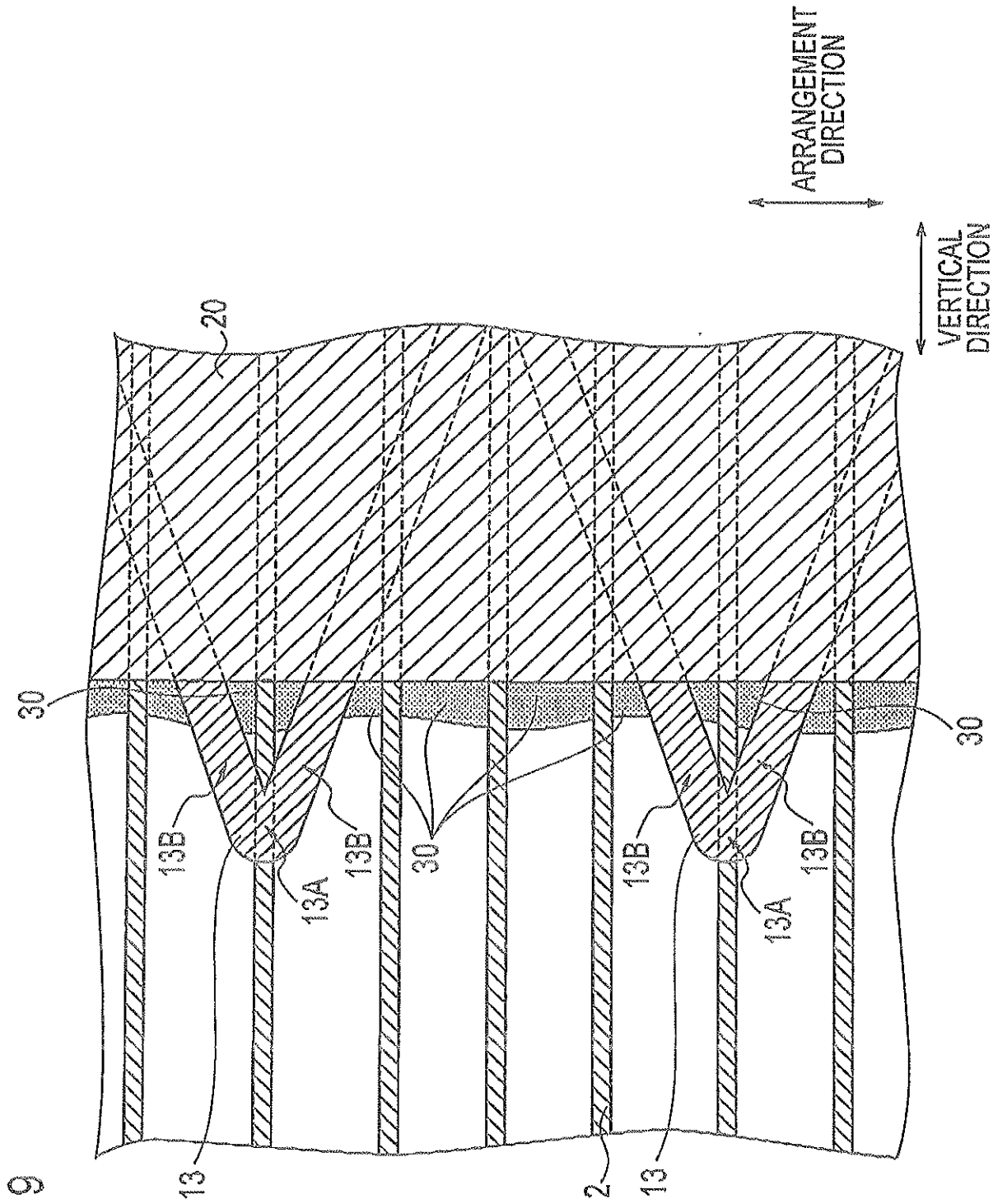
ARRANGEMENT DIRECTION
VERTICAL DIRECTION
20
30
13B
13A
13B
30
13B
13A
13B
30
13
12
13

FIG. 9