FIG.1

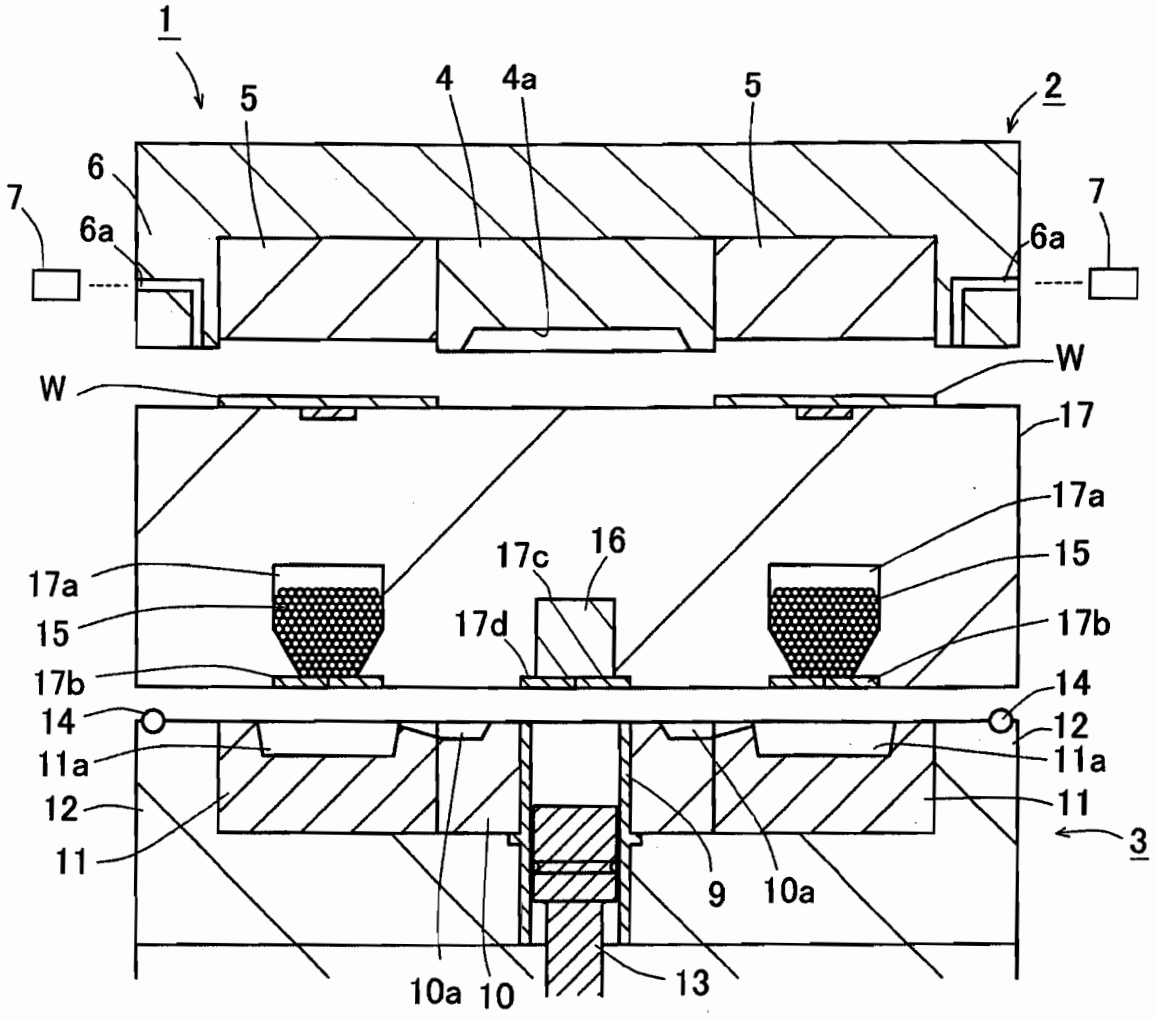
1
2
3
4
4a
5
5
6
6a
6a
7
7
W
W
17
17a
17a
15
15
16
17c
17d
17b
17b
14
14
12
11a
11a
12
11
11
9
10a
10a
10
13

FIG.2

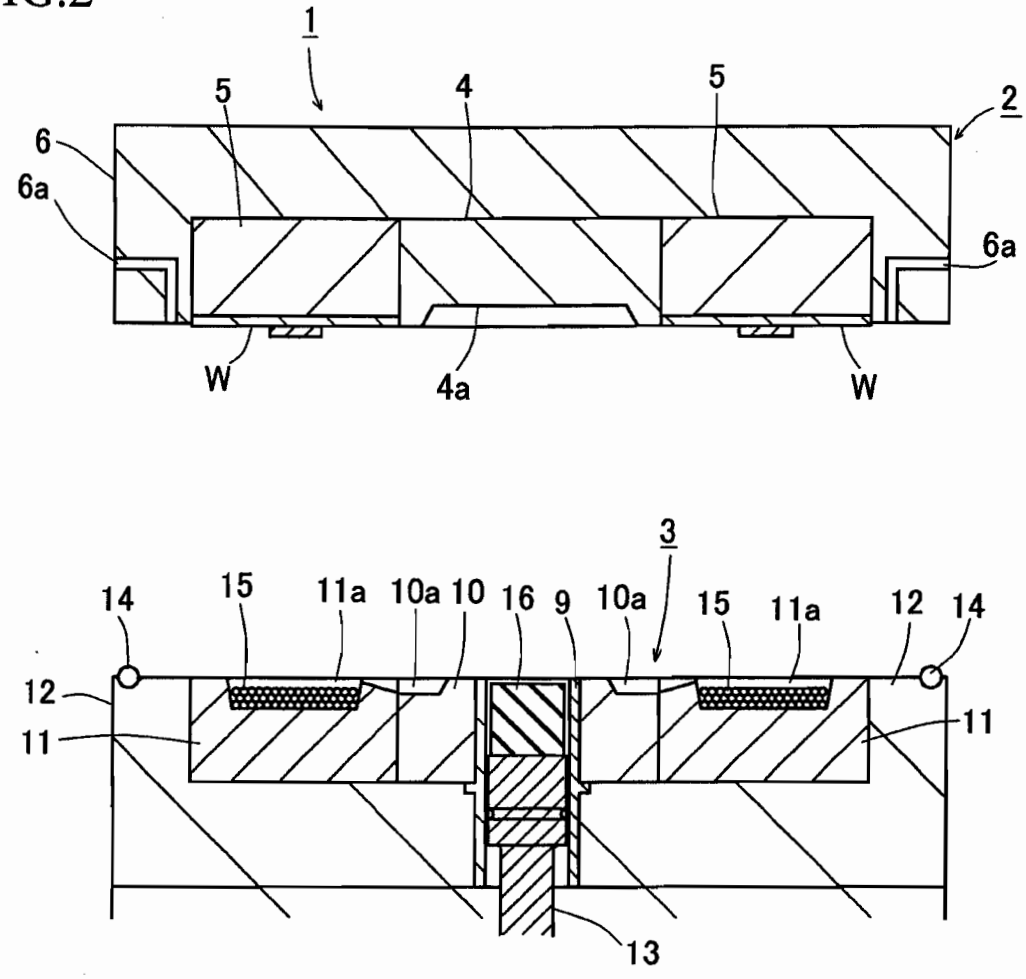
1
5
4
5
2
6
6a
6a
W
4a
W
3
14
15
11a
10a
10
16
9
10a
15
11a
12
14
12
11
11
13

FIG.3

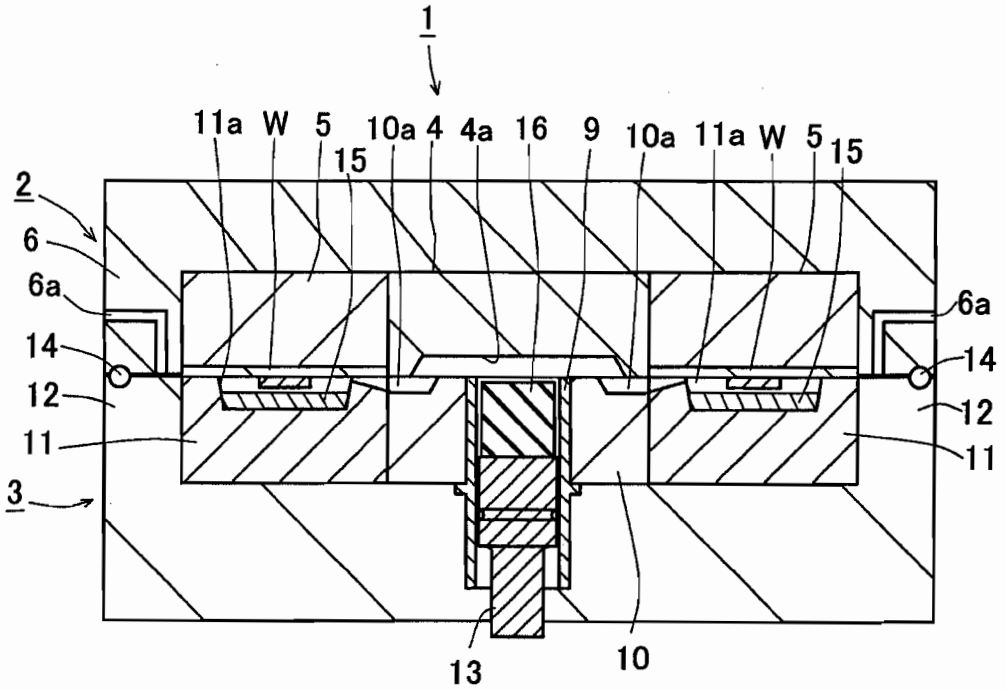
1
11a
W
5
15
10a
4
4a
16
9
10a
11a
W
5
15
2
6
6a
14
12
11
3
6a
14
12
11
13
10

FIG.4A

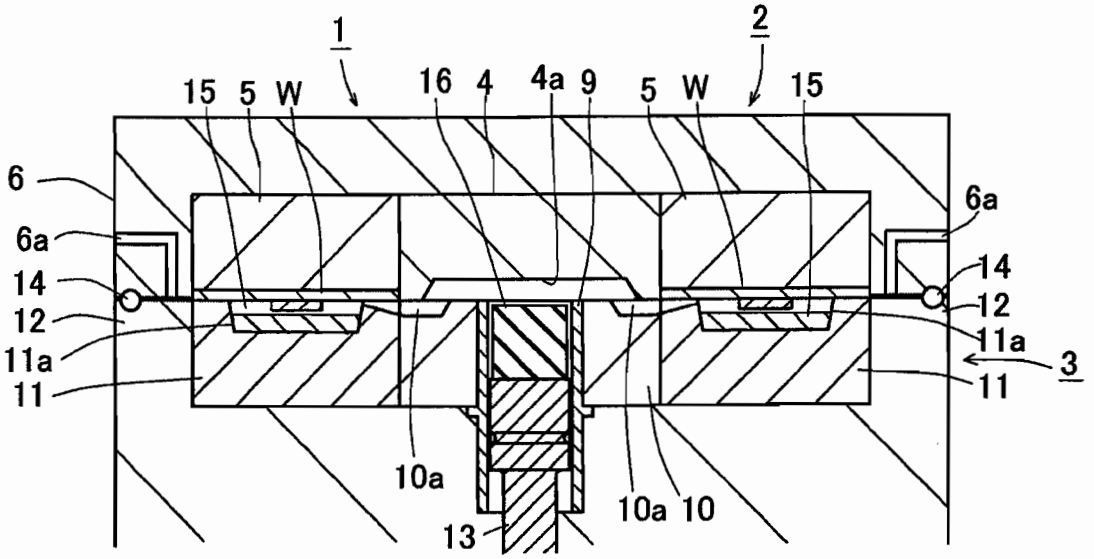

FIG.4B

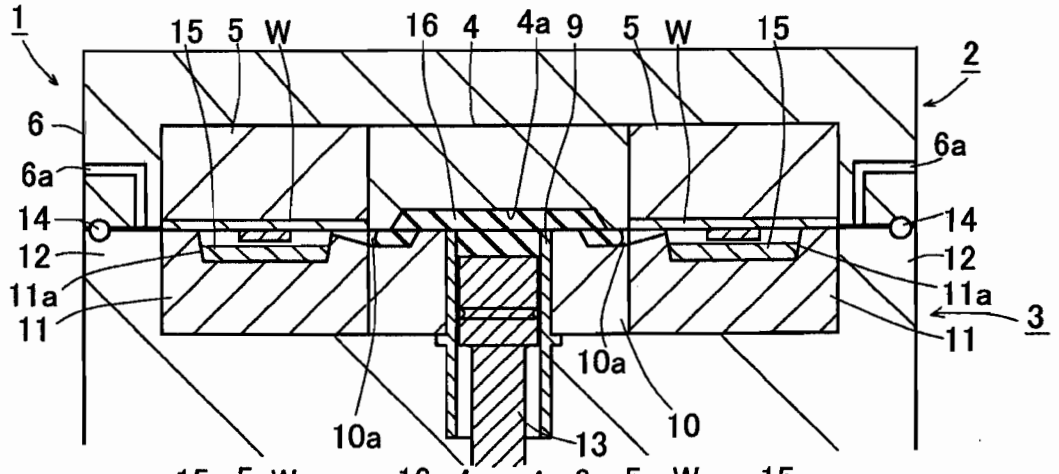

FIG.4C

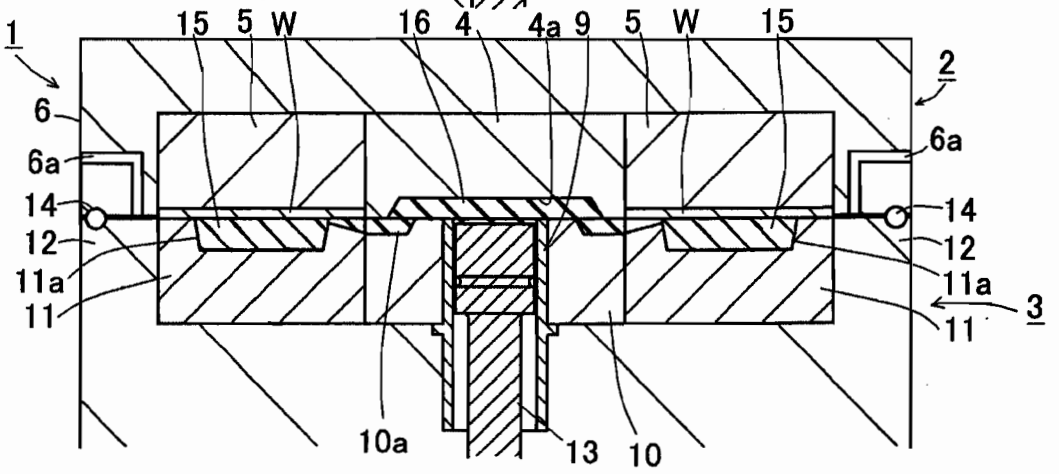

FIG.5

		POT			
		POWDER RESIN	GRANULAR RESIN	LIQUID RESIN	TABLET RESIN
CAVITY CONCAVE PORTION	POWDER RESIN	○	○	○	○
	GRANULAR RESIN	○	○	○	○
	LIQUID RESIN	○	○	○	○
	TABLET RESIN	○	○	○	○

FIG.6A

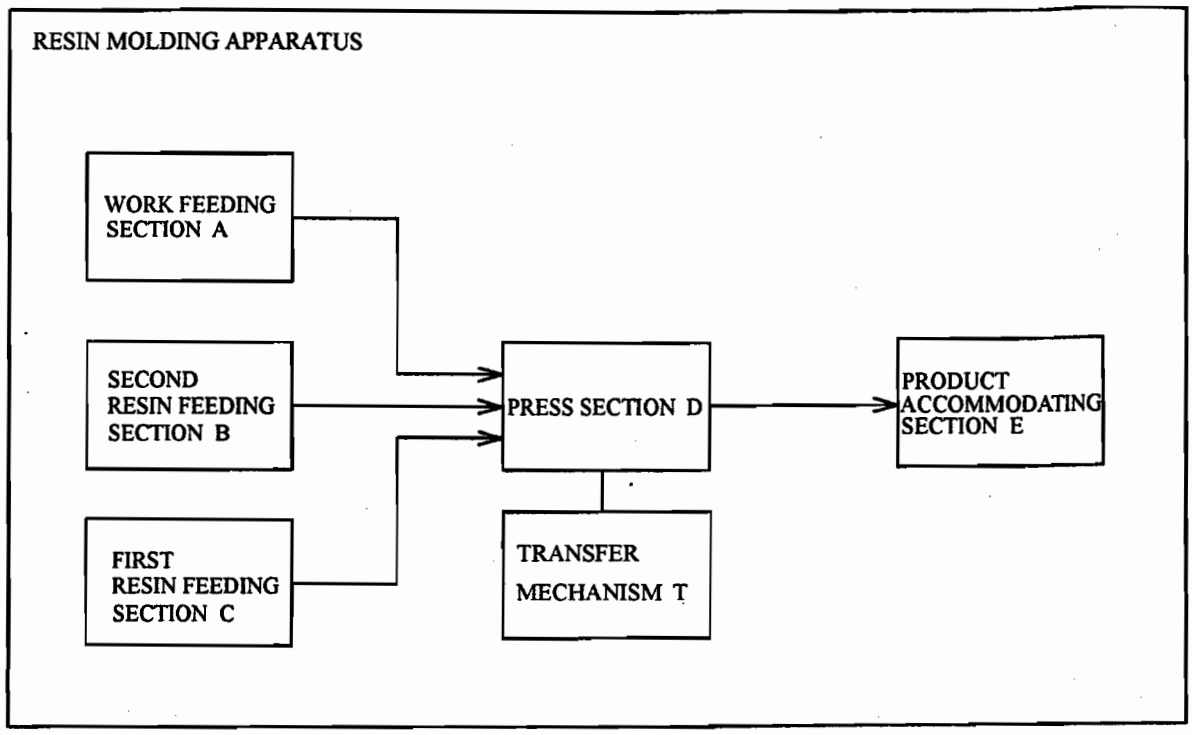
RESIN MOLDING APPARATUS
WORK FEEDING SECTION A
SECOND RESIN FEEDING SECTION B
FIRST RESIN FEEDING SECTION C
PRESS SECTION D
TRANSFER MECHANISM T
PRODUCT ACCOMMODATING SECTION E

FIG.6B

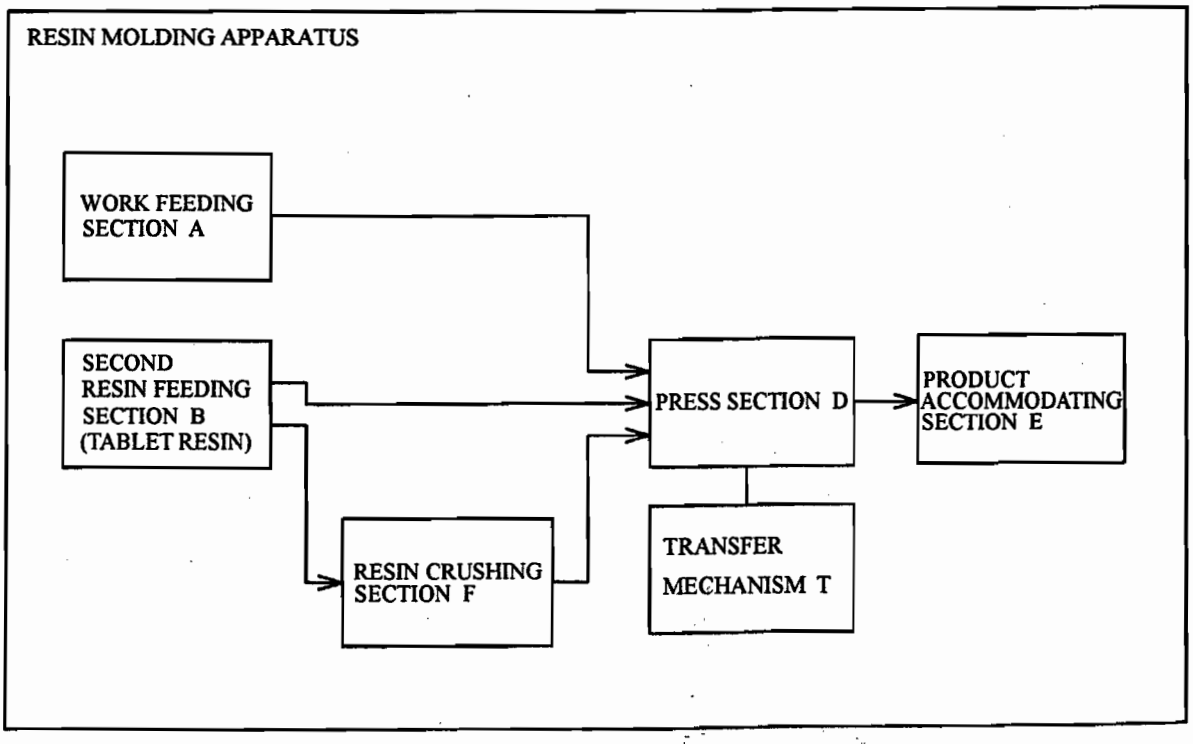
RESIN MOLDING APPARATUS
WORK FEEDING SECTION A
SECOND RESIN FEEDING SECTION B (TABLET RESIN)
RESIN CRUSHING SECTION F
PRESS SECTION D
TRANSFER MECHANISM T
PRODUCT ACCOMMODATING SECTION E

FIG.7

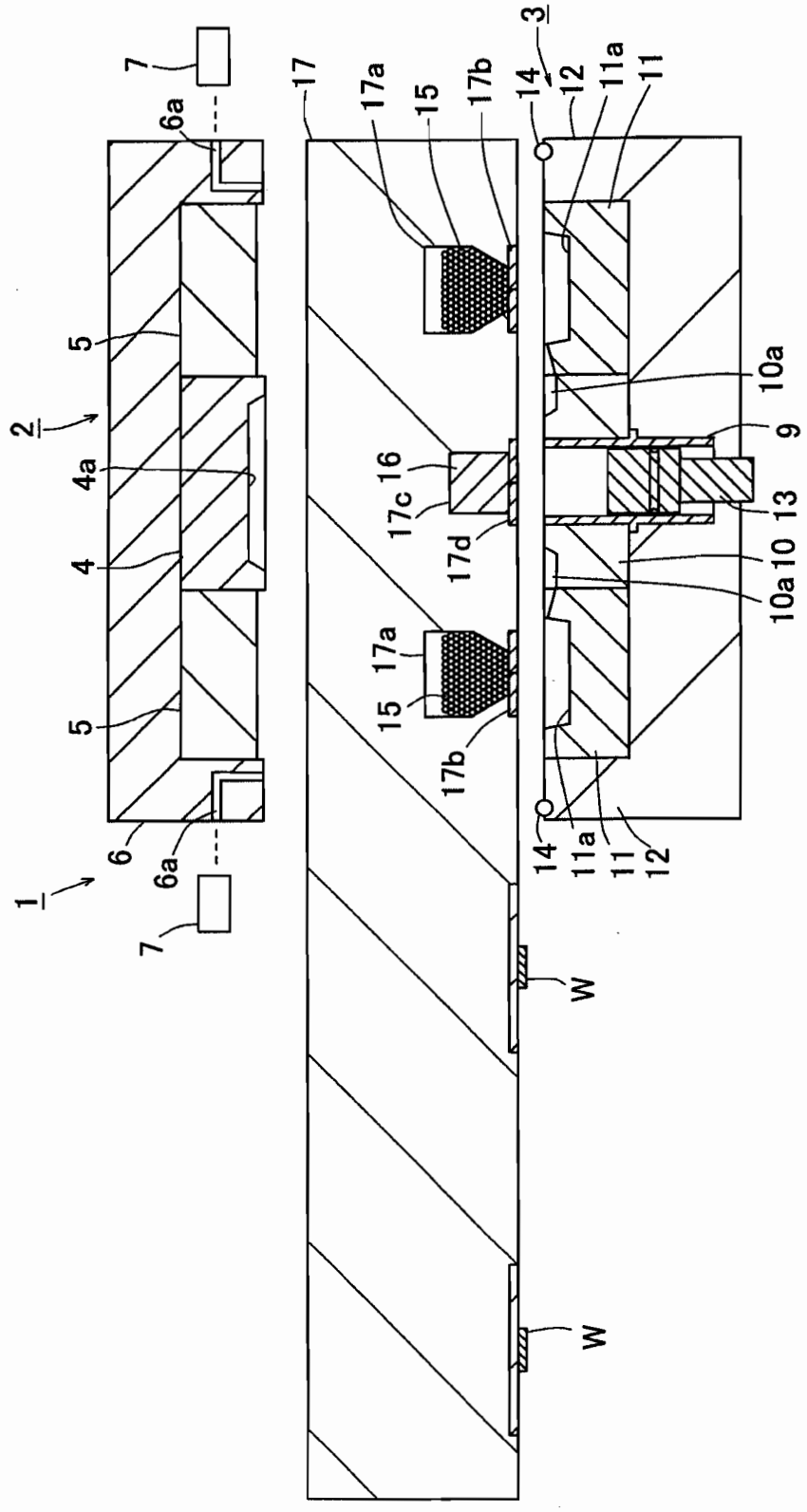
7
6a
5
2
4a
4
5
6
6a
7
1
17
17a
15
17b
14
12
11a
11
10a
9
16
17c
17d
13
10
10a
17a
15
17b
14
11a
11
12
W
W

FIG.8

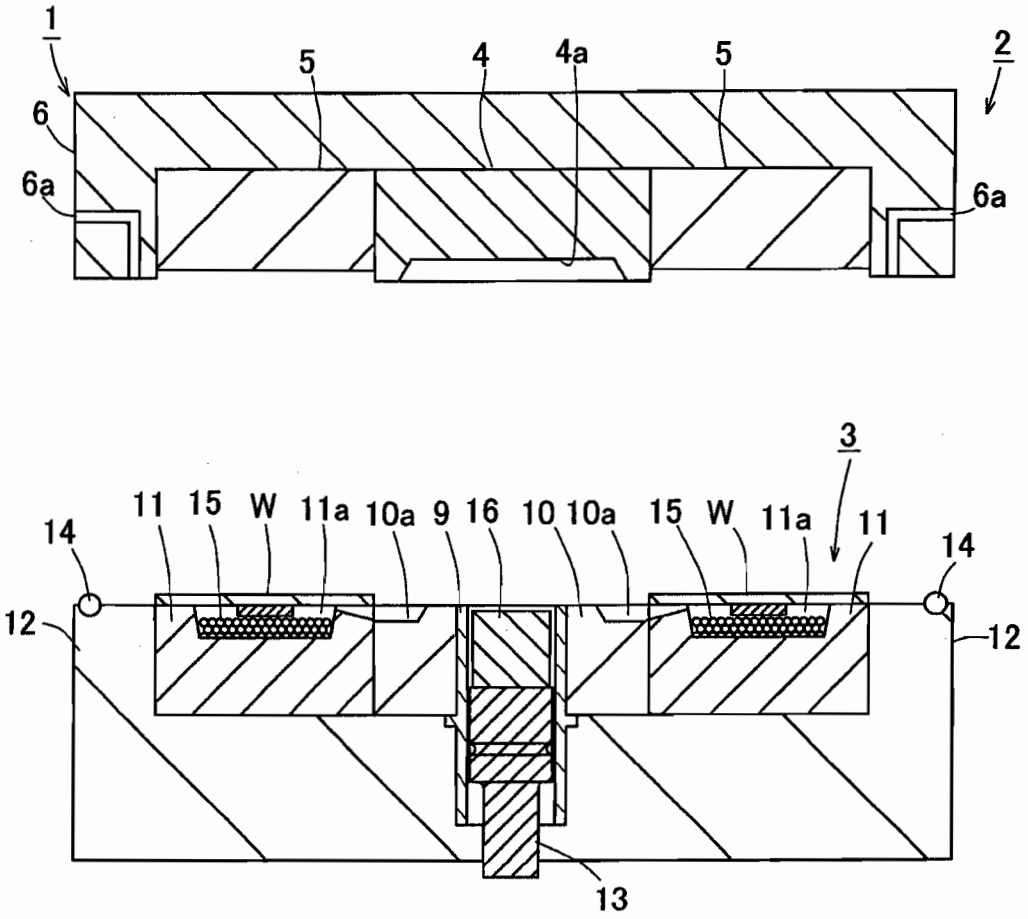
1
2
3
4
4a
5
5
6
6a
6a
11
15
W
11a
10a
9
16
10
10a
15
W
11a
11
14
14
12
12
13

FIG.9

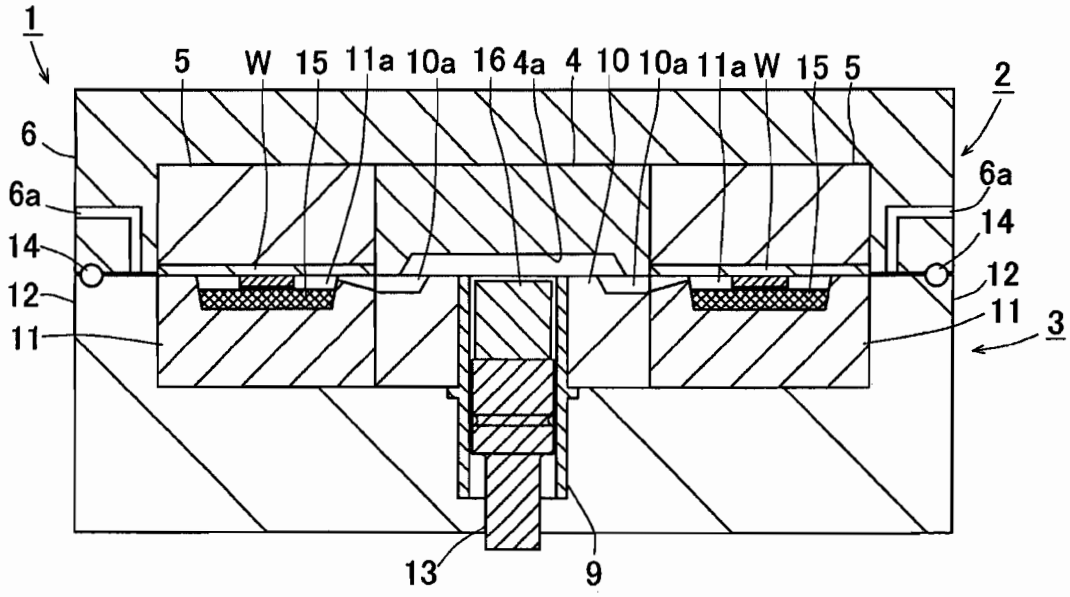
1
2
3
5
W
15
11a
10a
16
4a
4
10
10a
11a
W
15
5
6
6a
6a
14
14
12
12
11
11
13
9

FIG.10

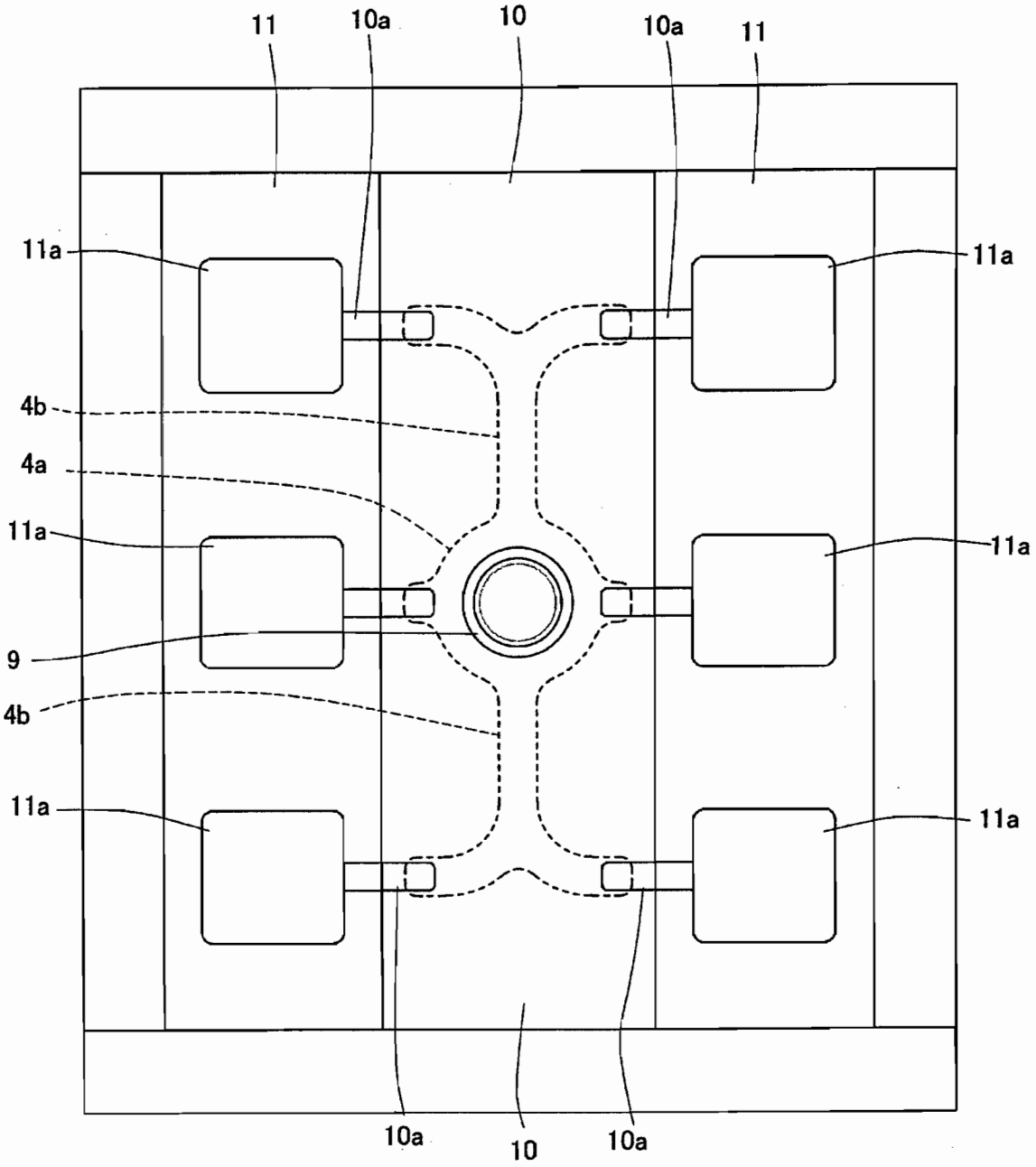

FIG.11

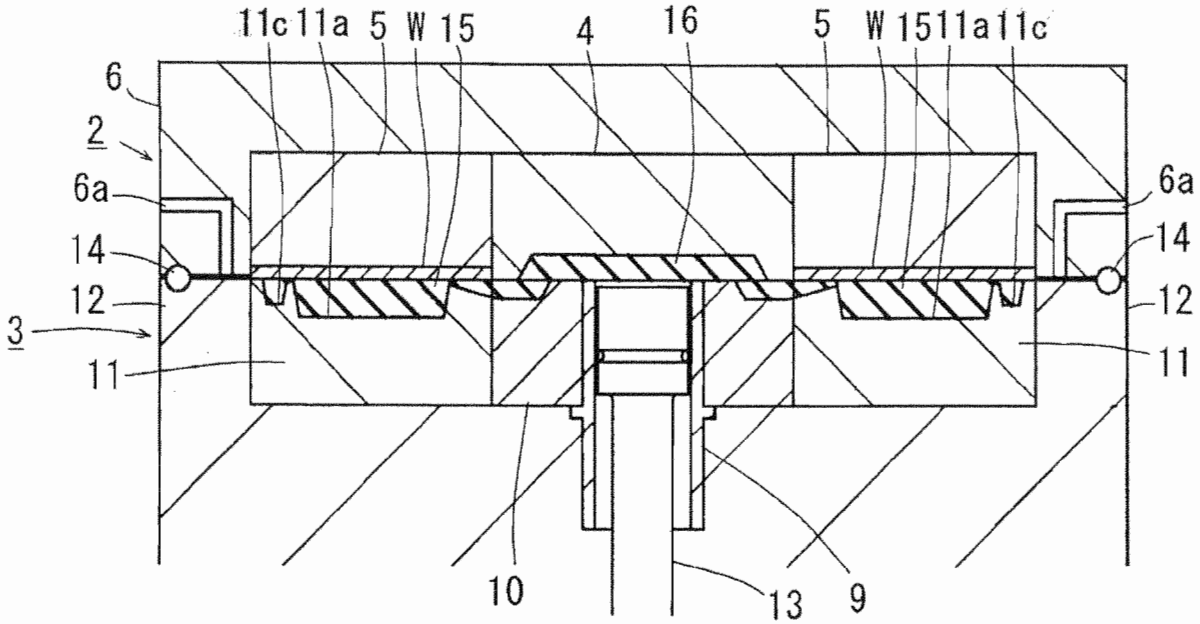
11c
11a
5
W
15
4
16
5
W
15
11a
11c
6
2
6a
14
12
3
11
6a
14
12
11
10
13
9

FIG.12

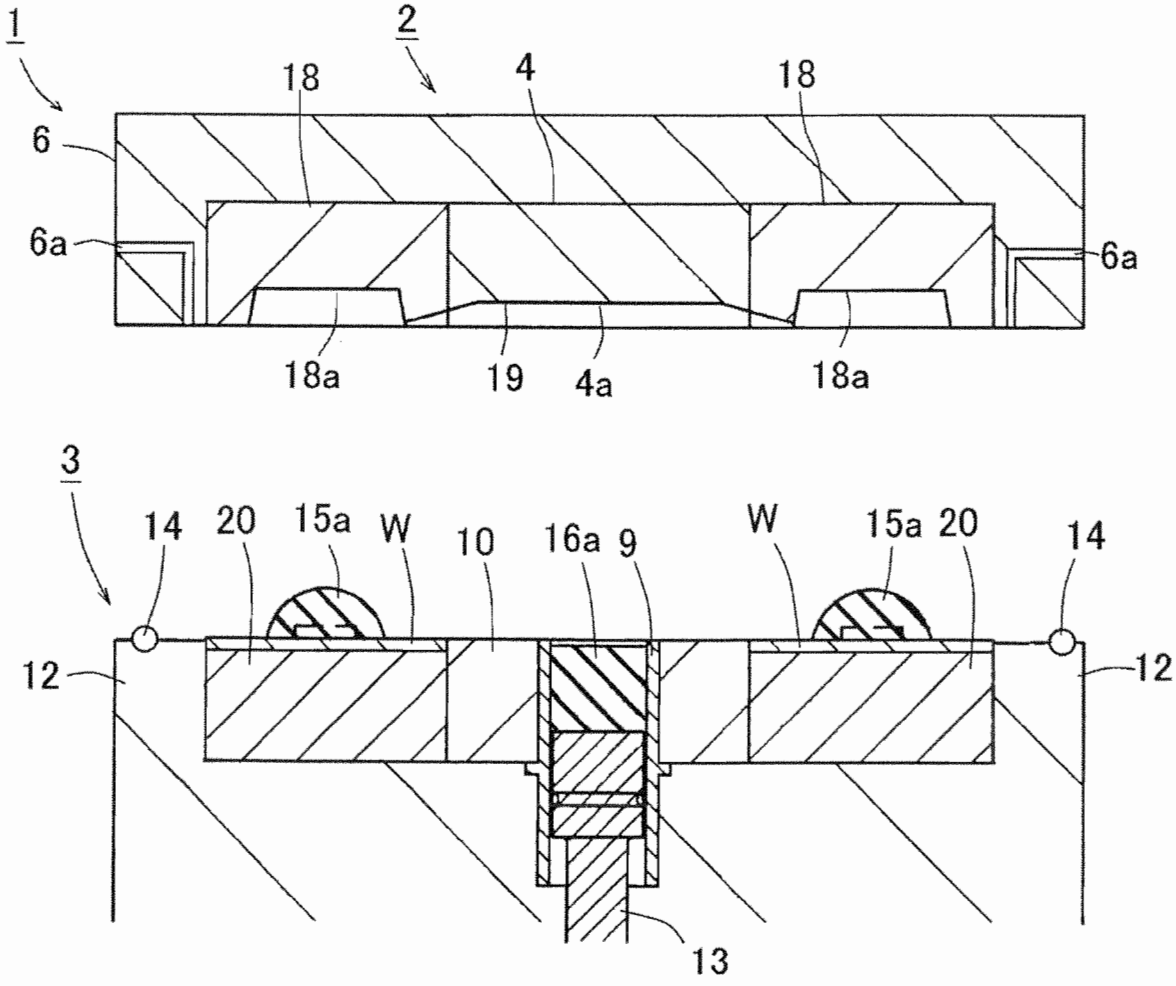
1
2
18
4
18
6
6a
6a
18a
19
4a
18a
3
14
20
15a
W
10
16a
9
W
15a
20
14
12
12
13

FIG.13A

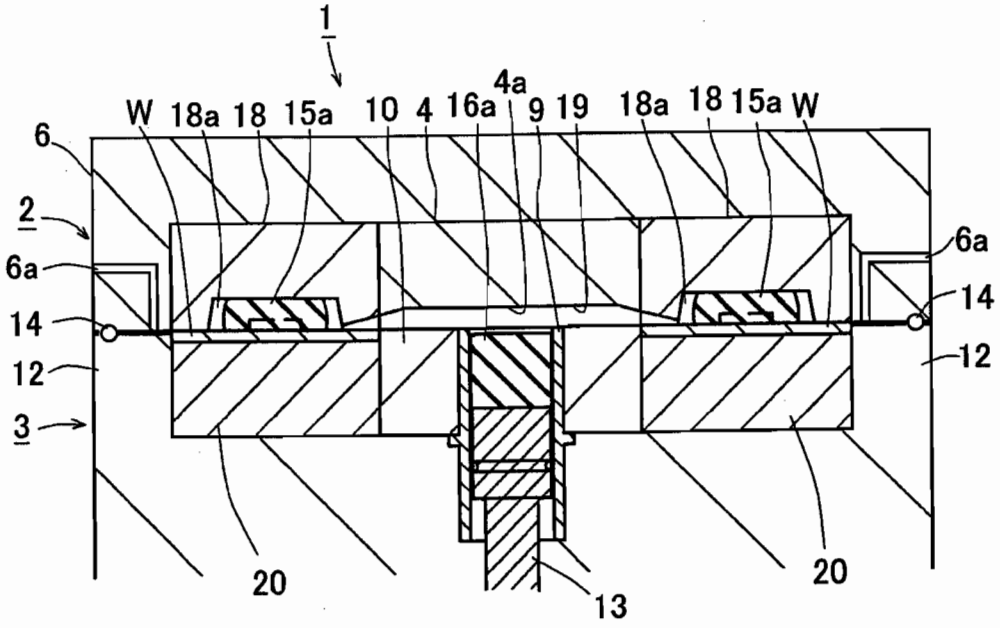

FIG.13B

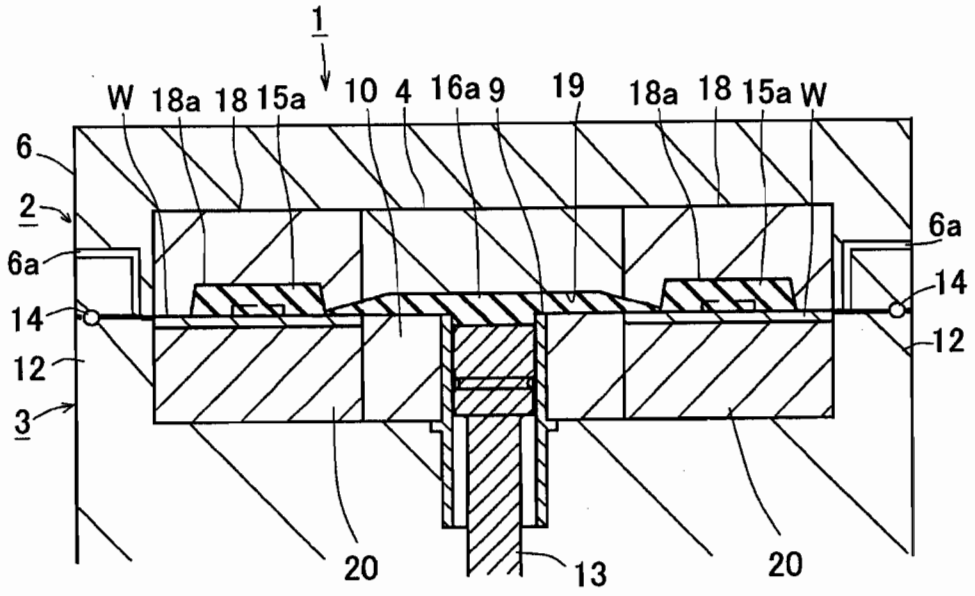

FIG.14

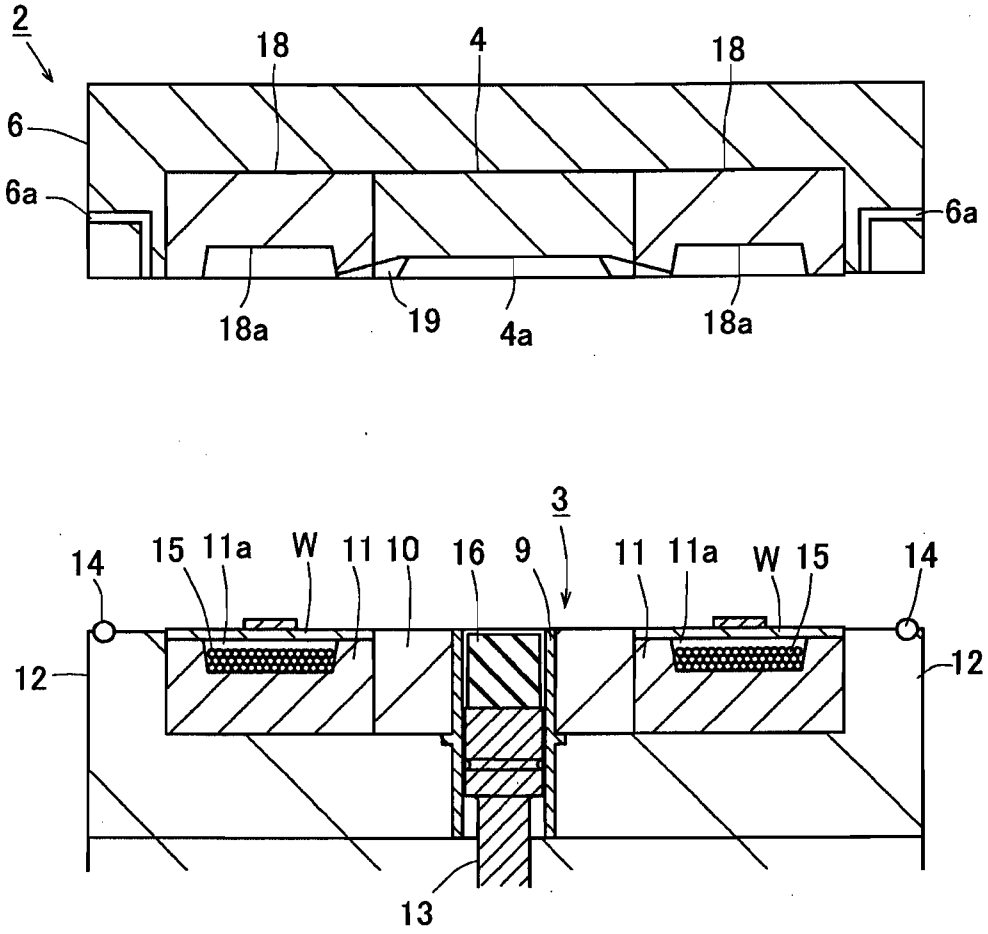
2
18
4
18
6
6a
6a
18a
19
4a
18a
3
14
15
11a
W
11
10
16
9
11
11a
W
15
14
12
12
13

FIG.15

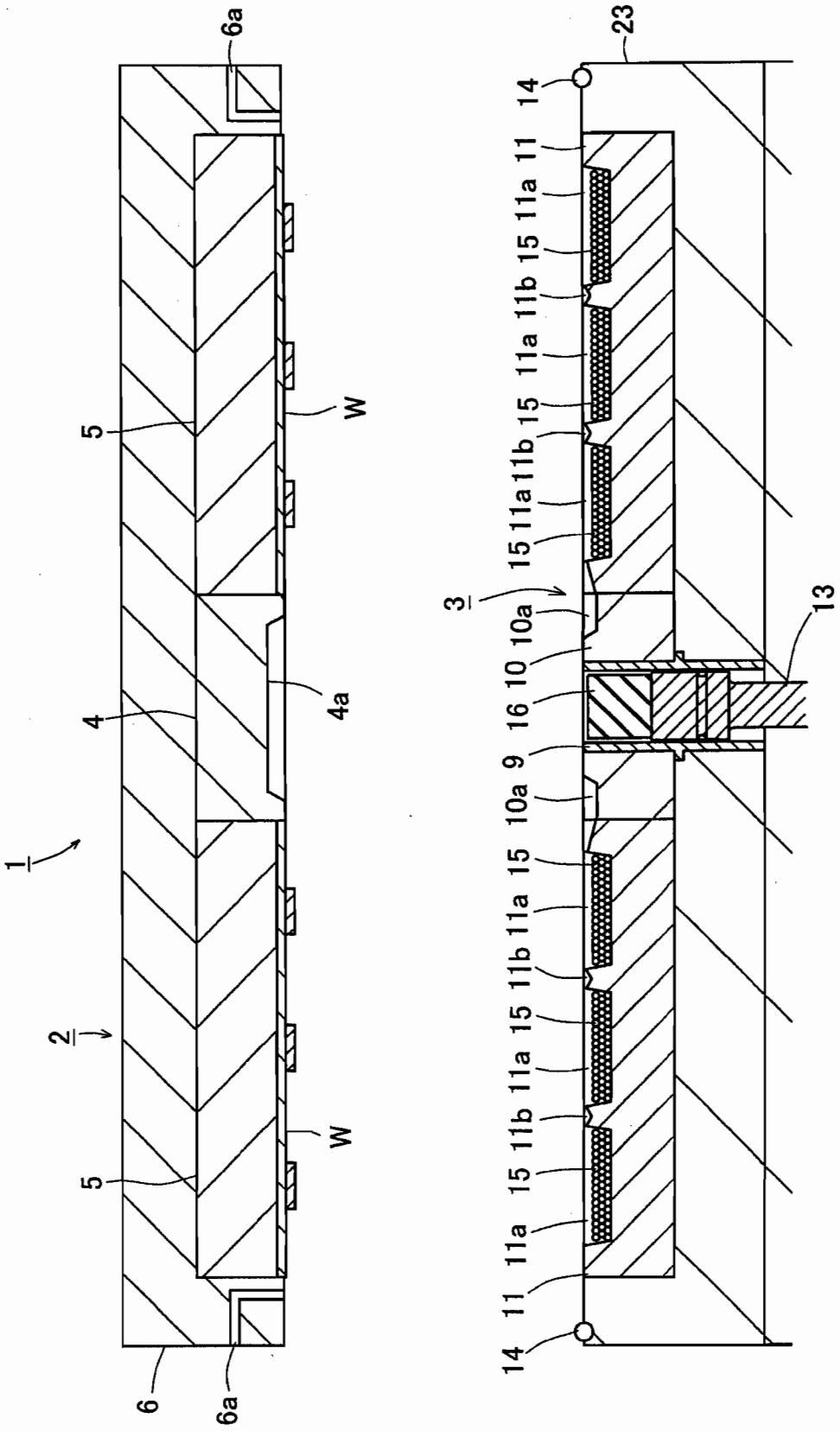
1
2
3
4
4a
5
5
6
6a
6a
W
W
9
10
10a
10a
11
11
11a
11a
11a
11a
11b
11b
11b
11b
13
14
14
15
15
15
15
15
16
23

FIG.16

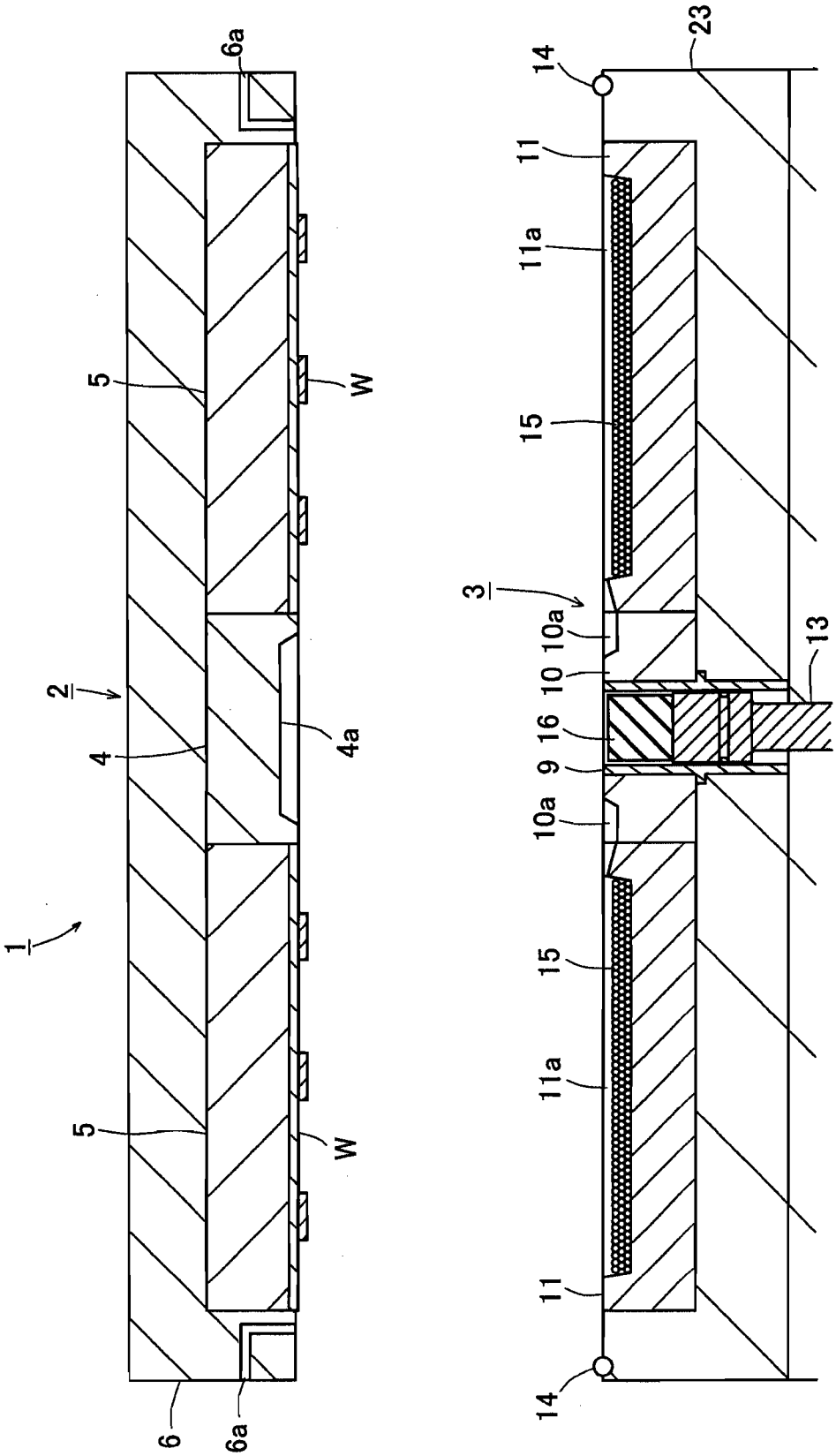

FIG.17

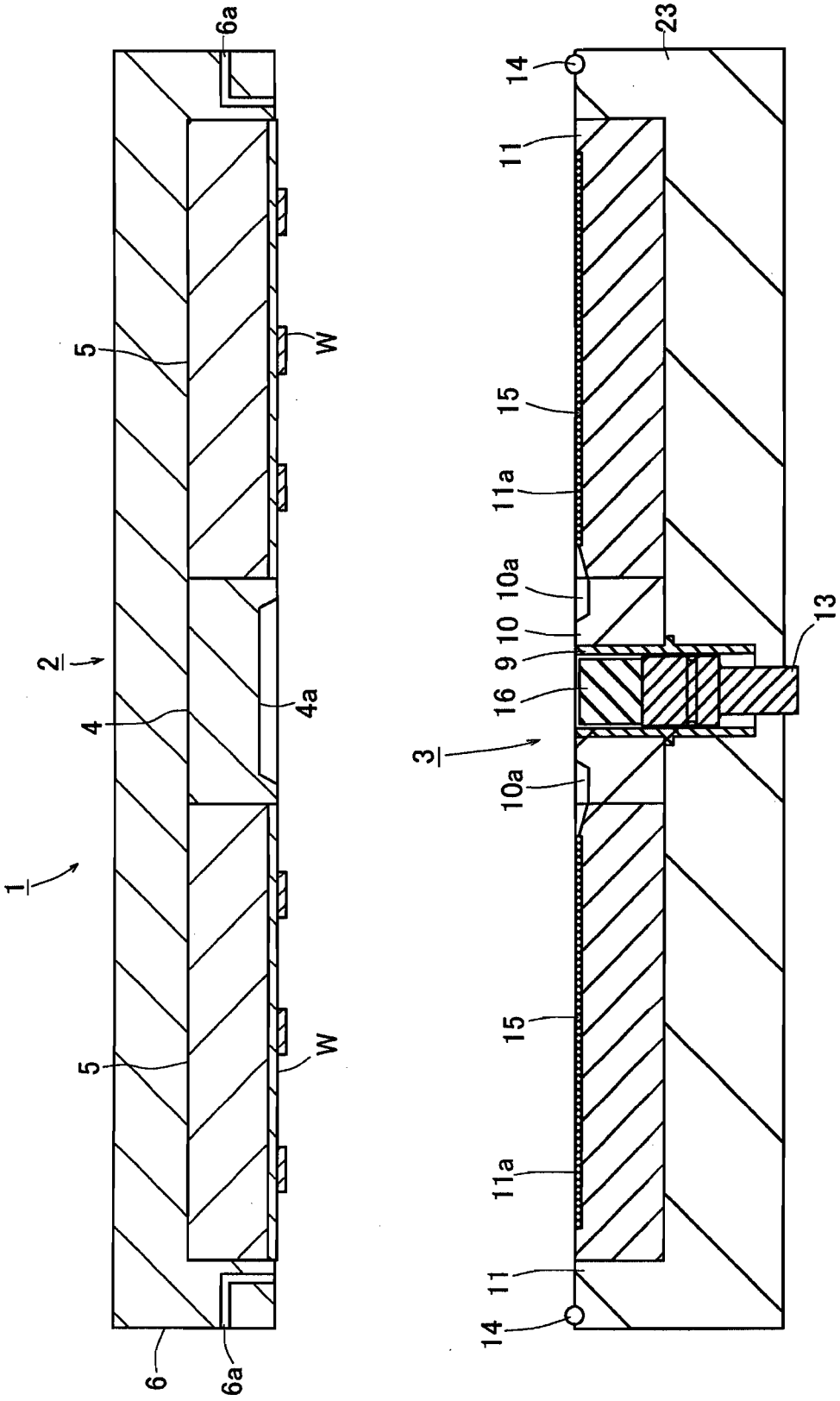

FIG.18

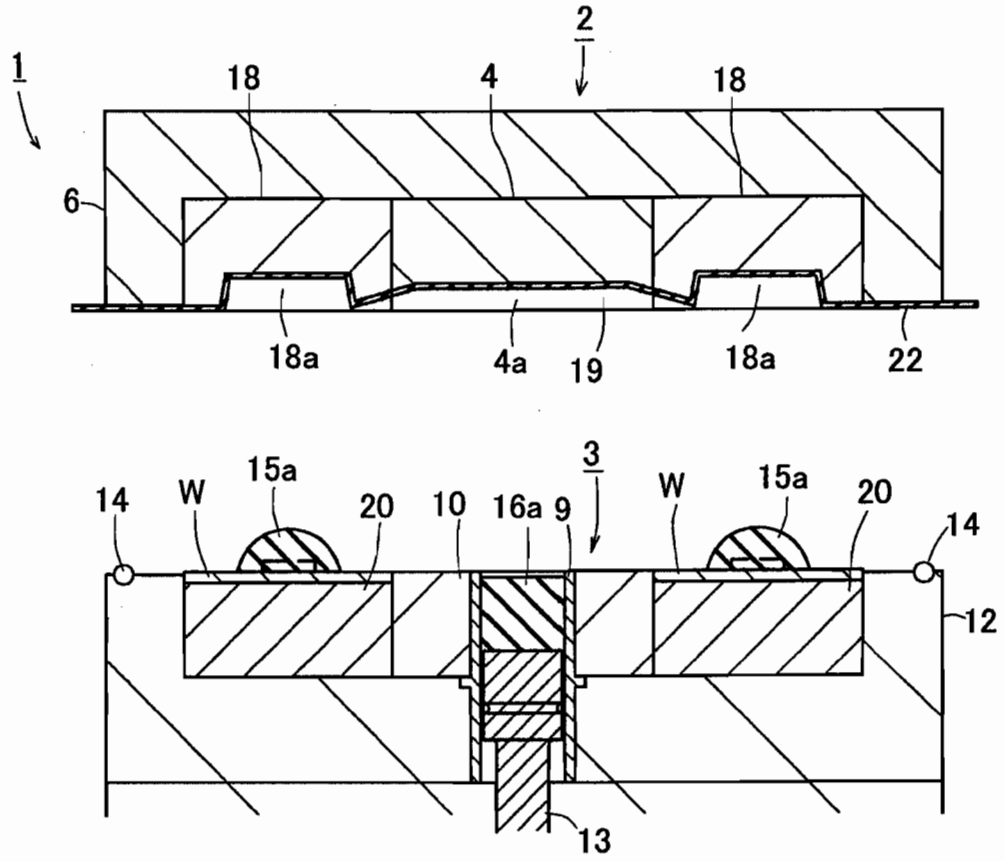
1
2
18
4
18
6
18a
4a
19
18a
22
3
14
W
15a
20
10
16a
9
W
15a
20
14
12
13

FIG.19

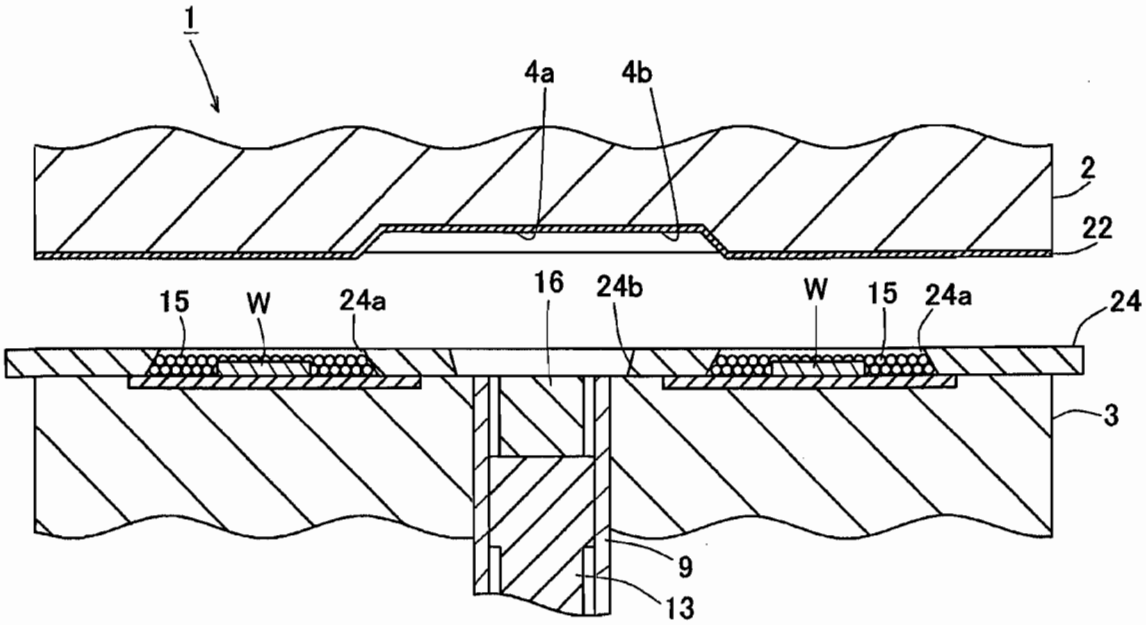
1
4a
4b
2
22
15
W
24a
16
24b
W
15
24a
24
3
9
13

FIG.20

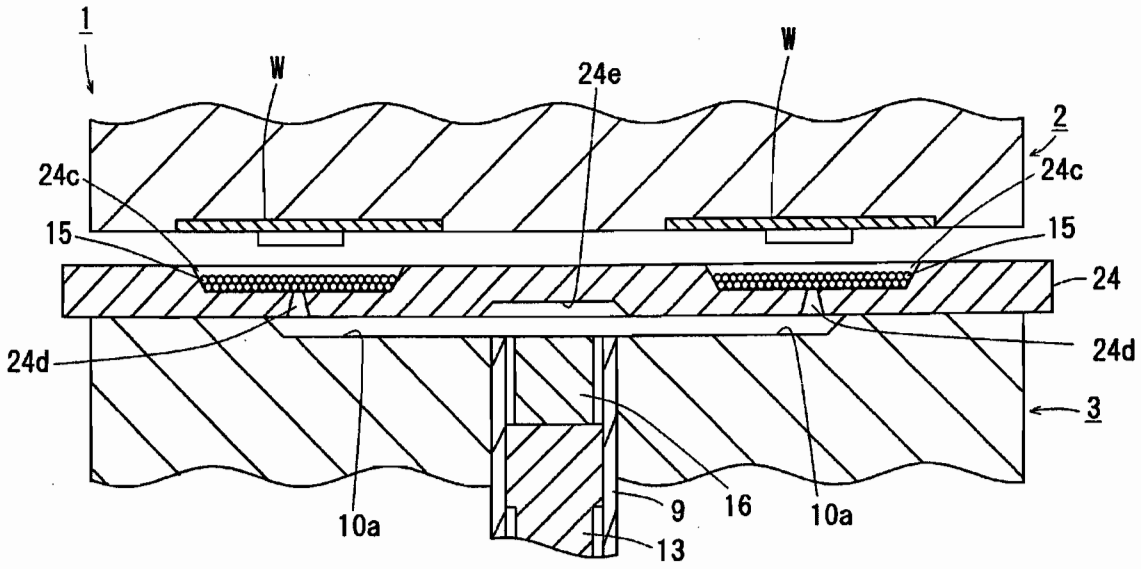
1
W
W
24e
2
24c
24c
15
15
24
24d
24d
3
10a
9
16
10a
13

FIG.21

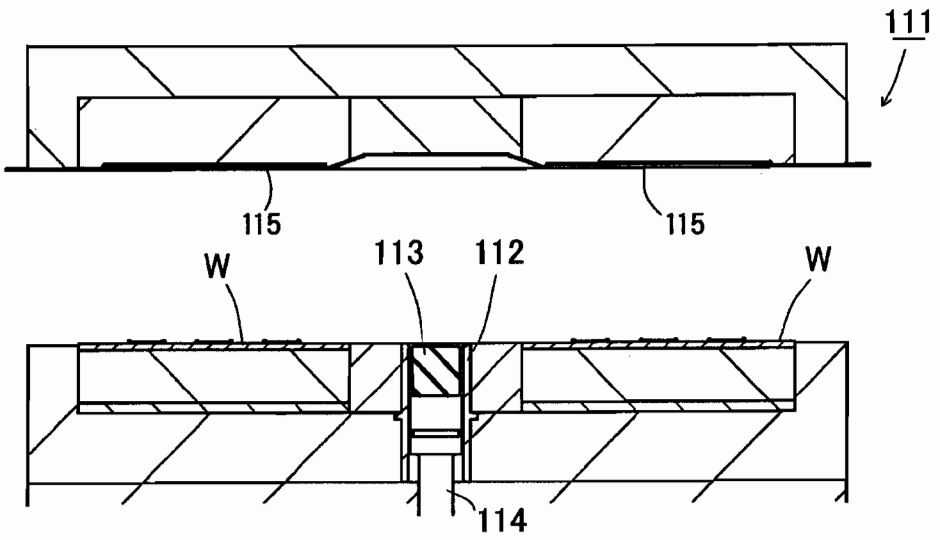
111
115
115
W
113
112
W
114

FIG.22

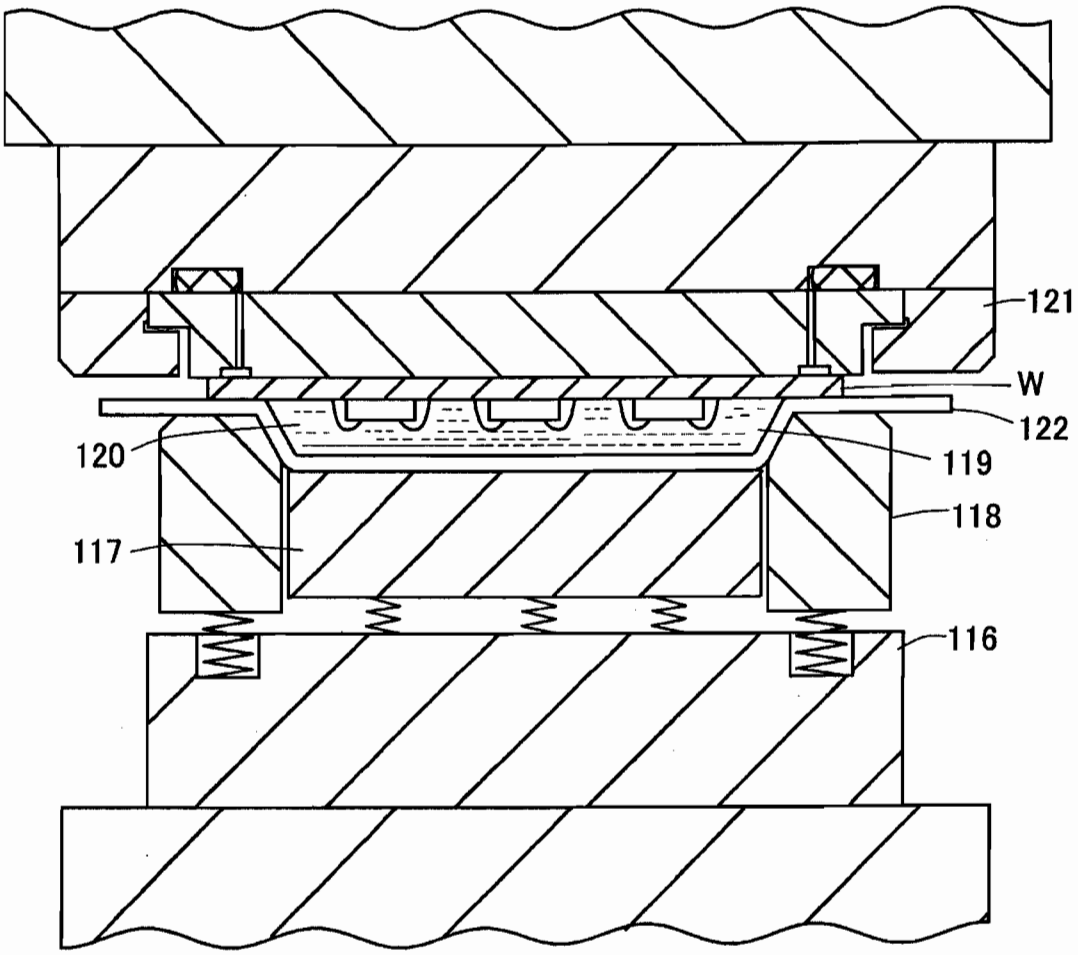

FIG.23

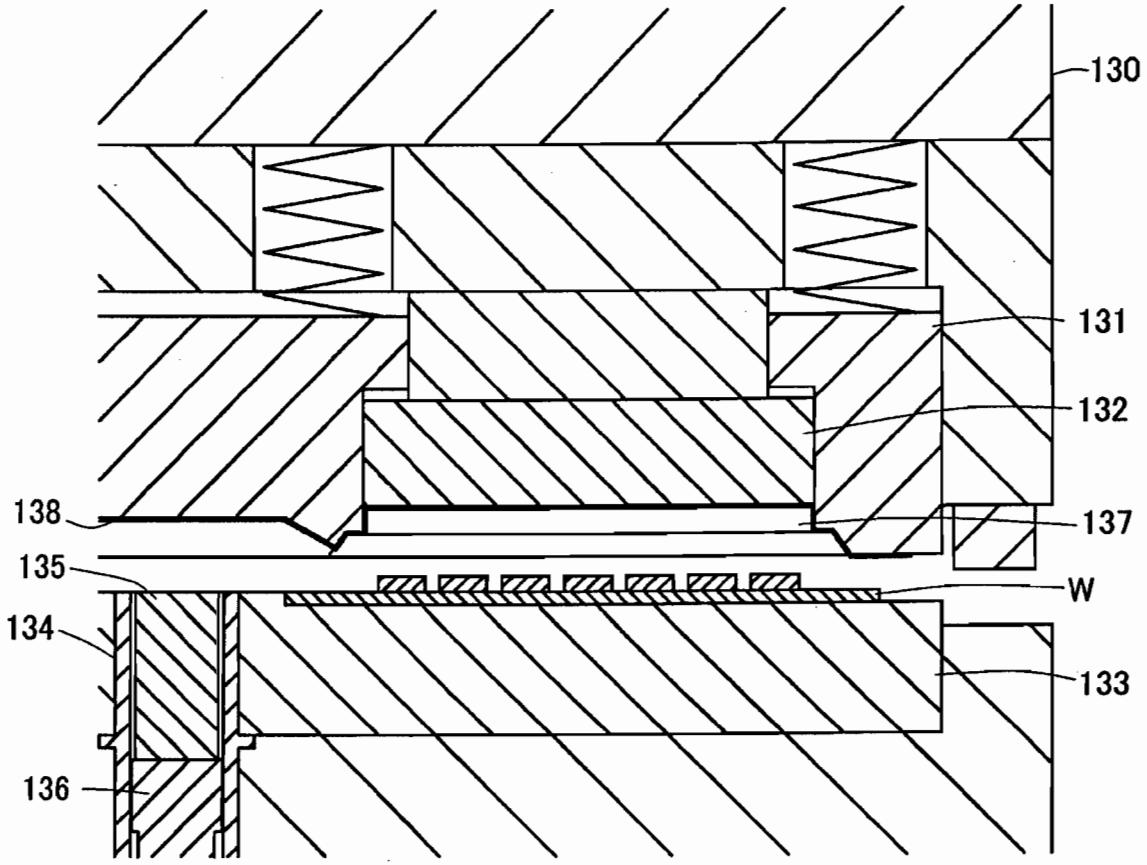

FIG.24

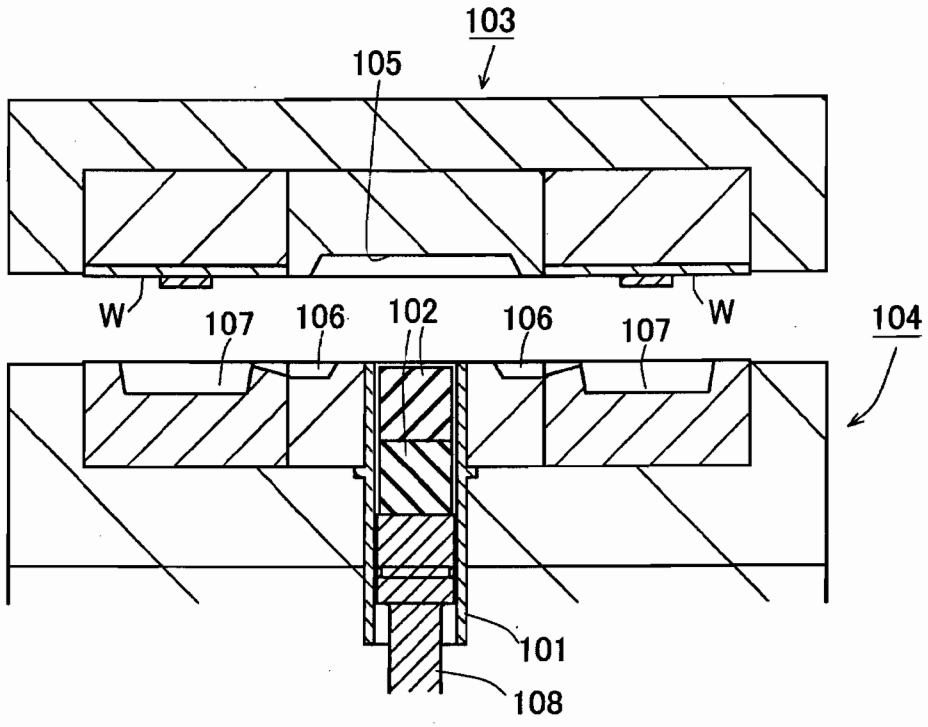

FIG.25

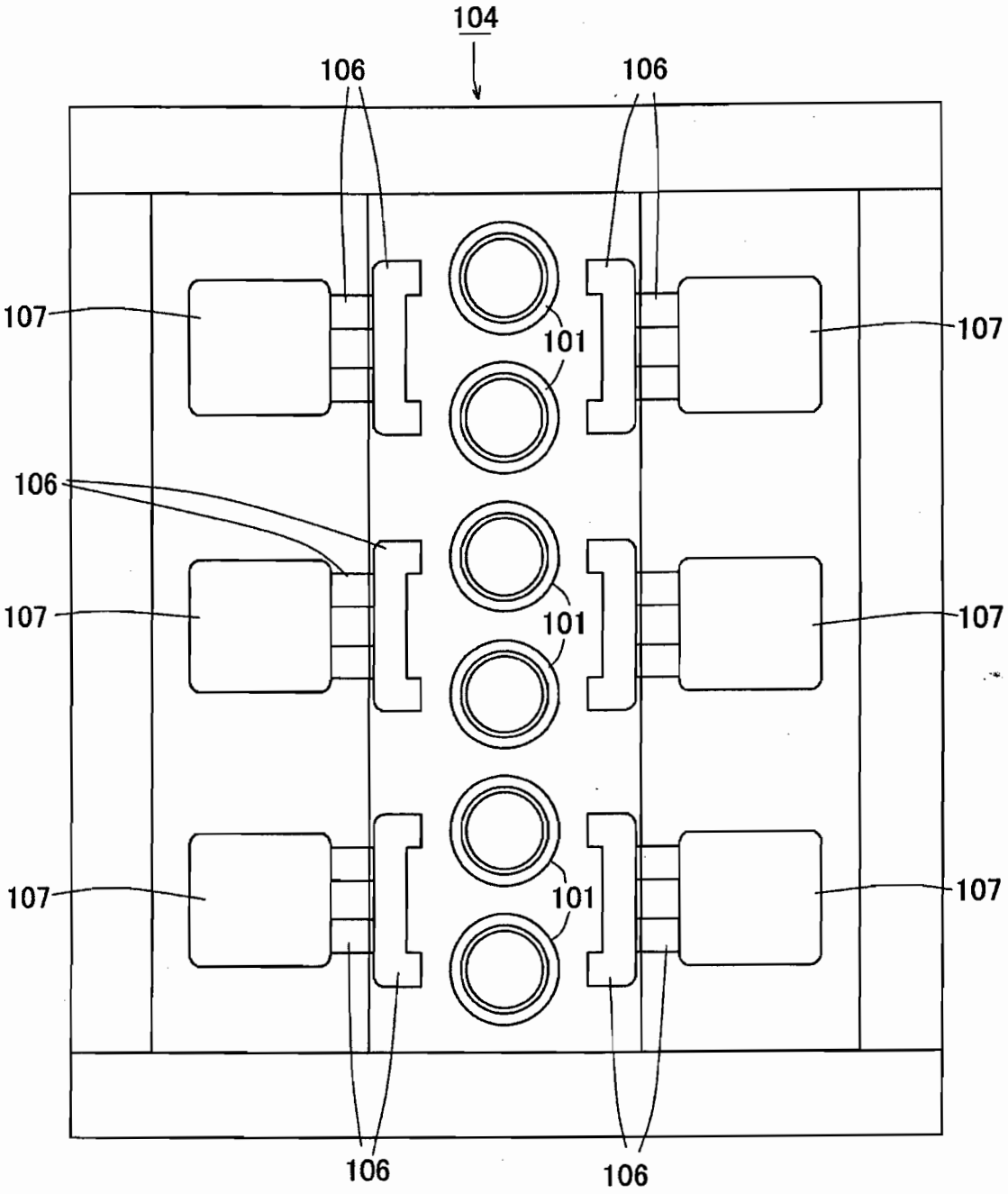

FIG.26

