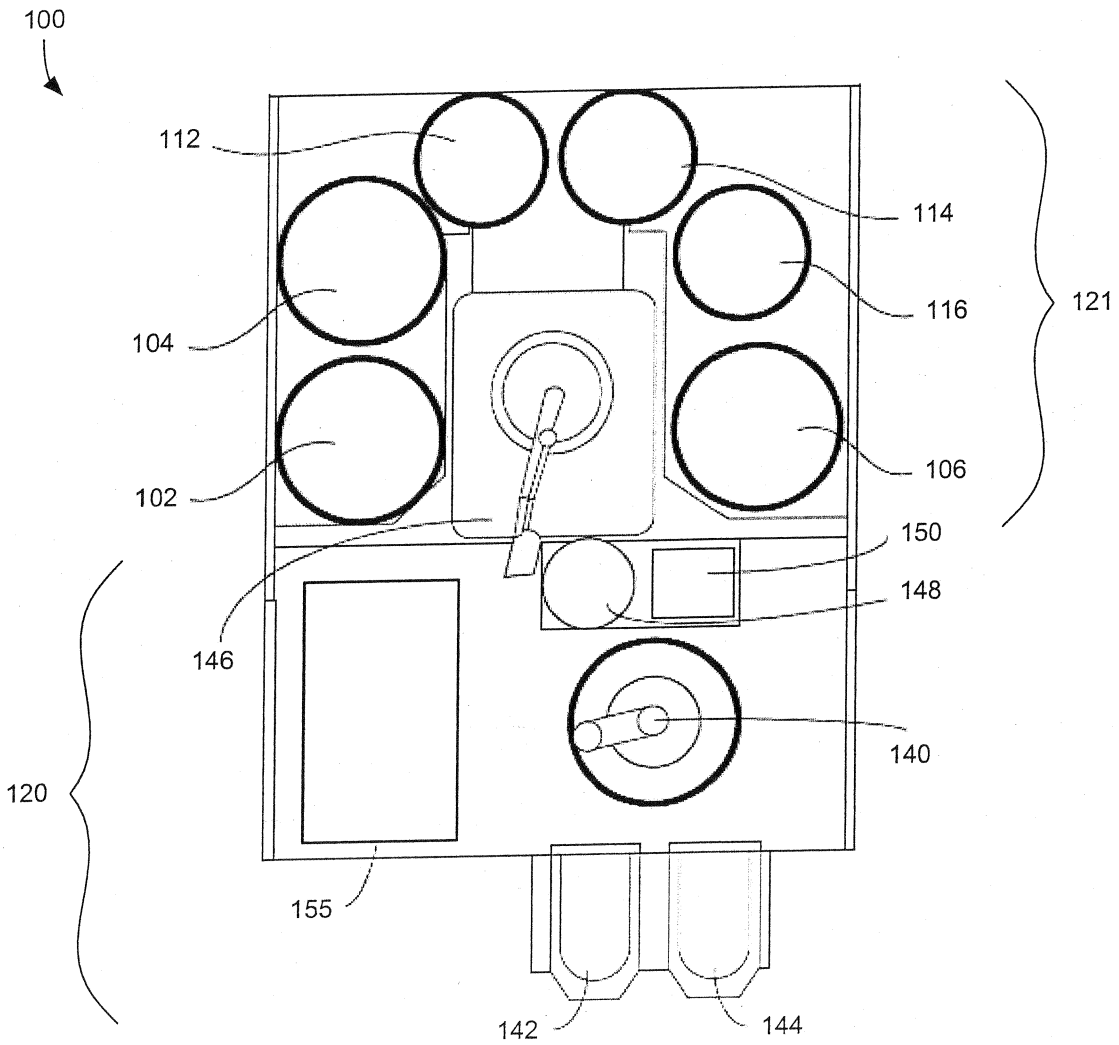

FIG. 1

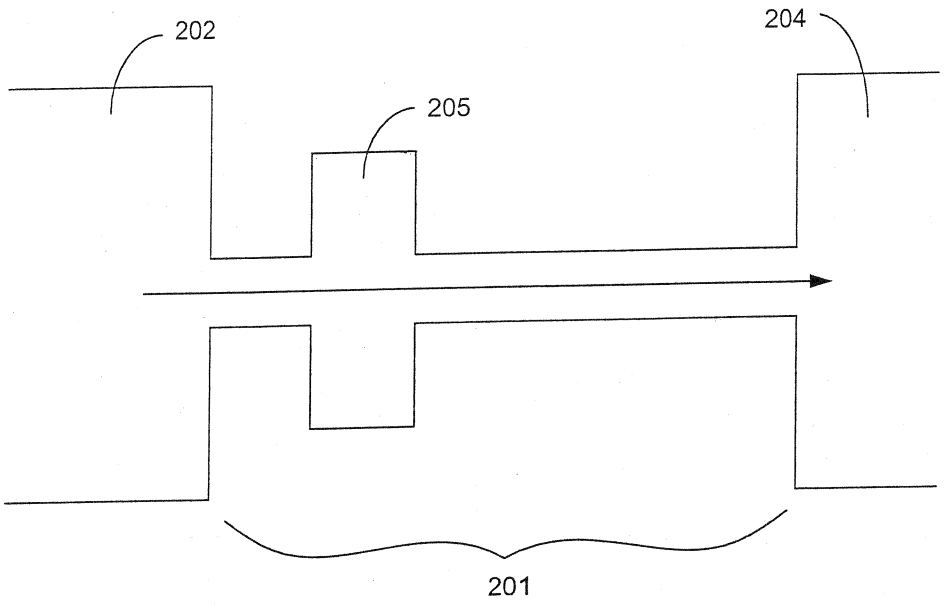

FIG. 2A

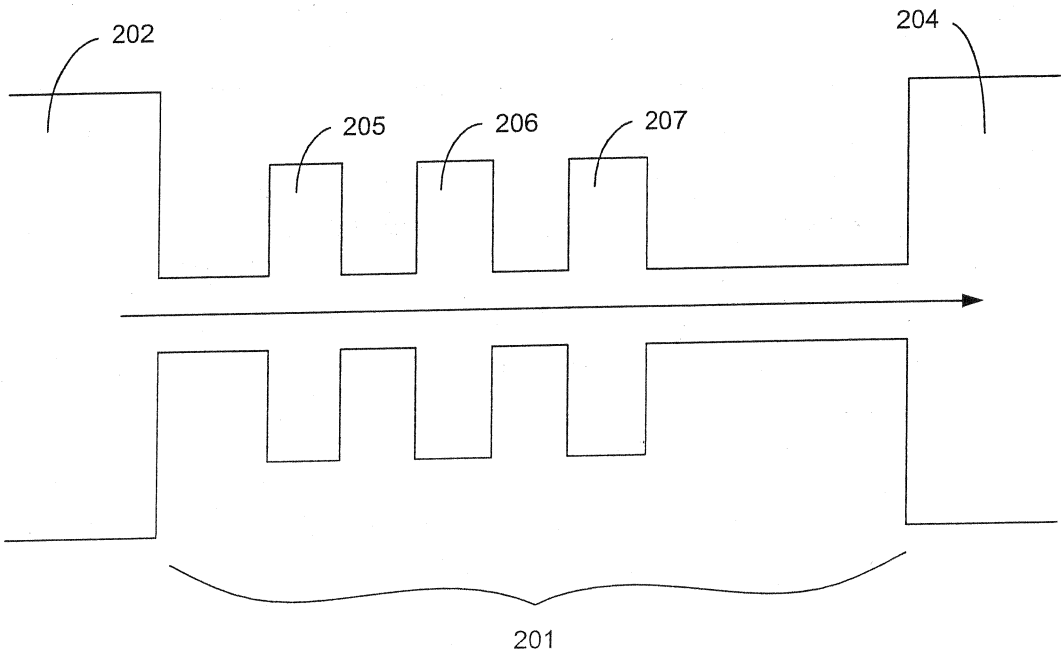

FIG. 2B

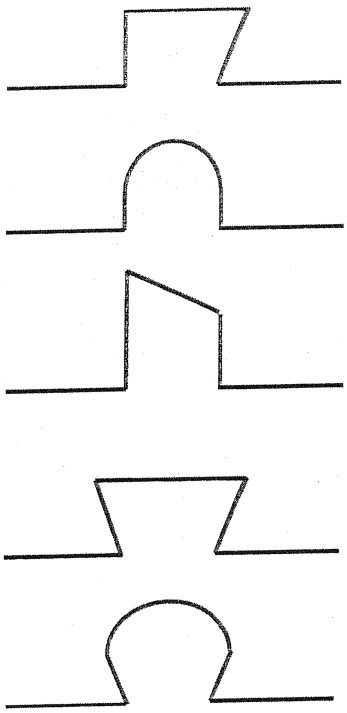

FIG. 2C

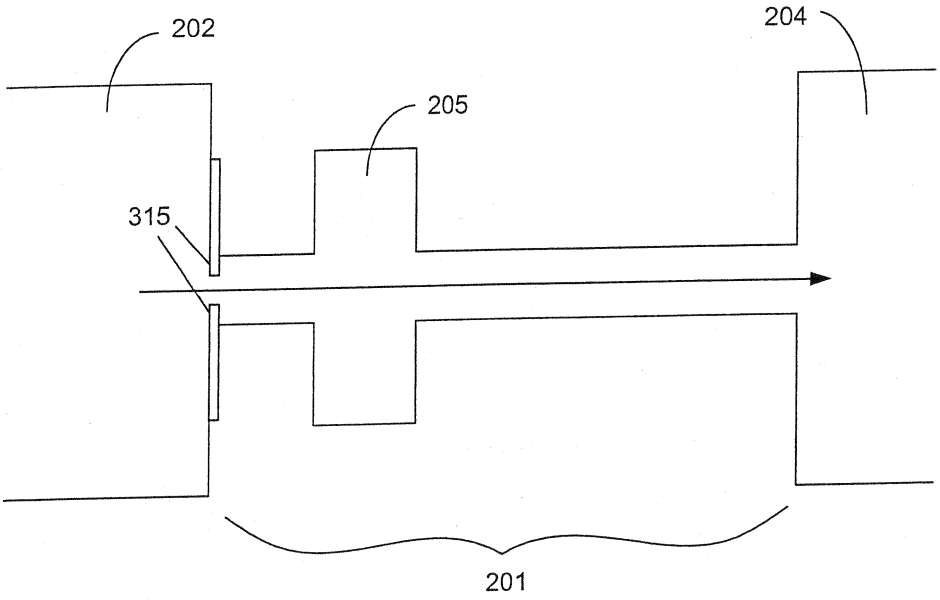

FIG. 3

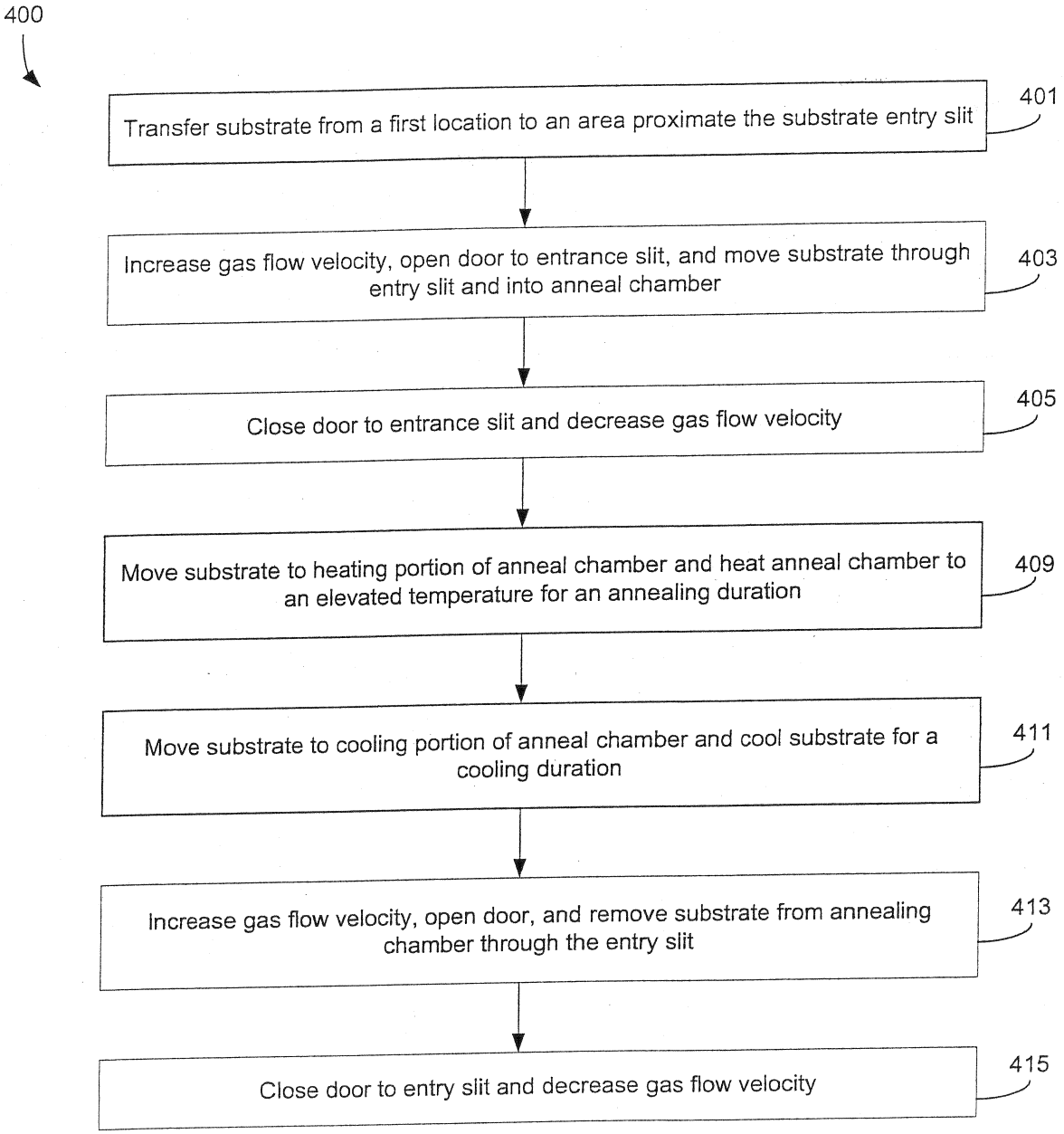
400
Transfer substrate from a first location to an area proximate the substrate entry slit
401
Increase gas flow velocity, open door to entrance slit, and move substrate through entry slit and into anneal chamber
403
Close door to entrance slit and decrease gas flow velocity
405
Move substrate to heating portion of anneal chamber and heat anneal chamber to an elevated temperature for an annealing duration
409
Move substrate to cooling portion of anneal chamber and cool substrate for a cooling duration
411
Increase gas flow velocity, open door, and remove substrate from annealing chamber through the entry slit
413
Close door to entry slit and decrease gas flow velocity
415

FIG. 4

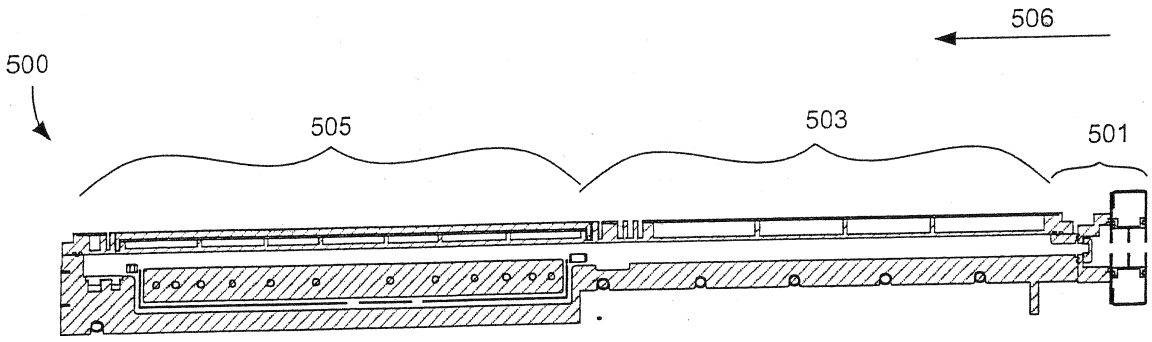
506
500
505
503
501

FIG. 5

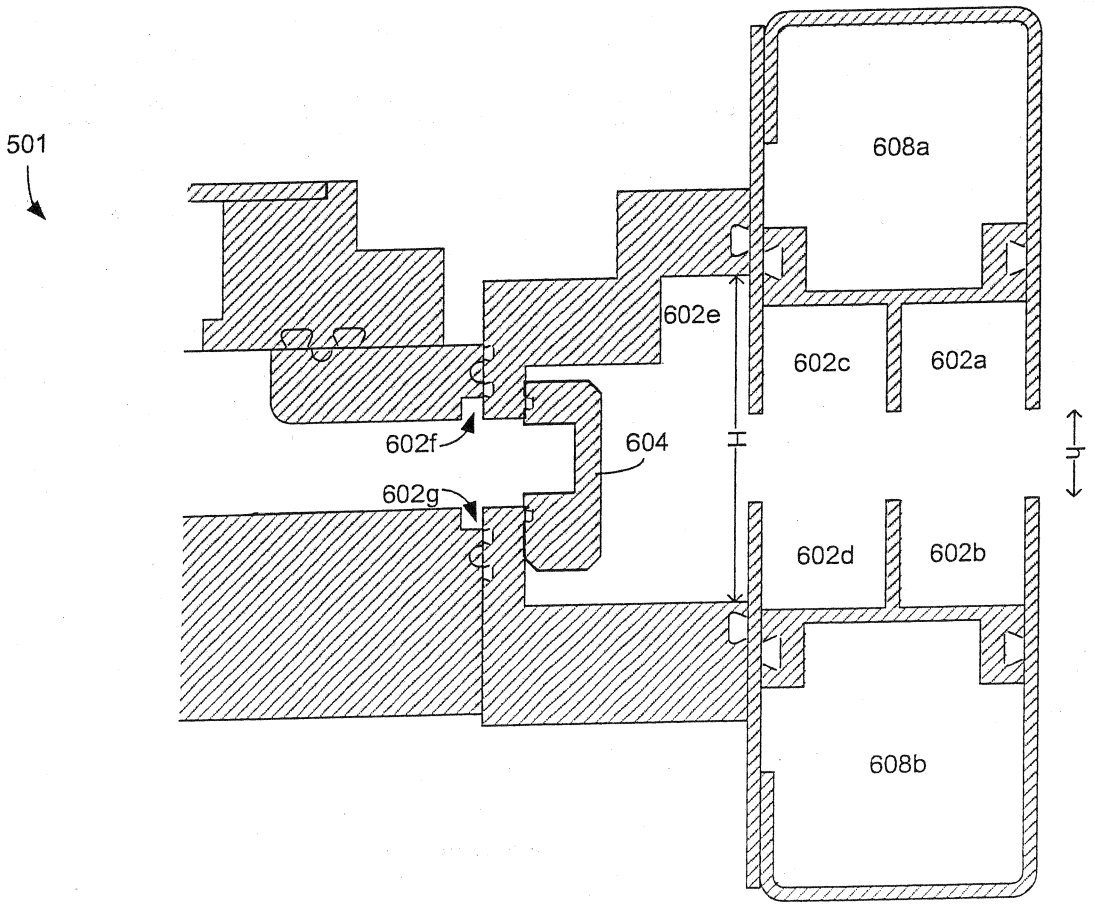
501
608a
602e
602c
602a
602f
604
602g
H
h
602d
602b
608b

FIG. 6

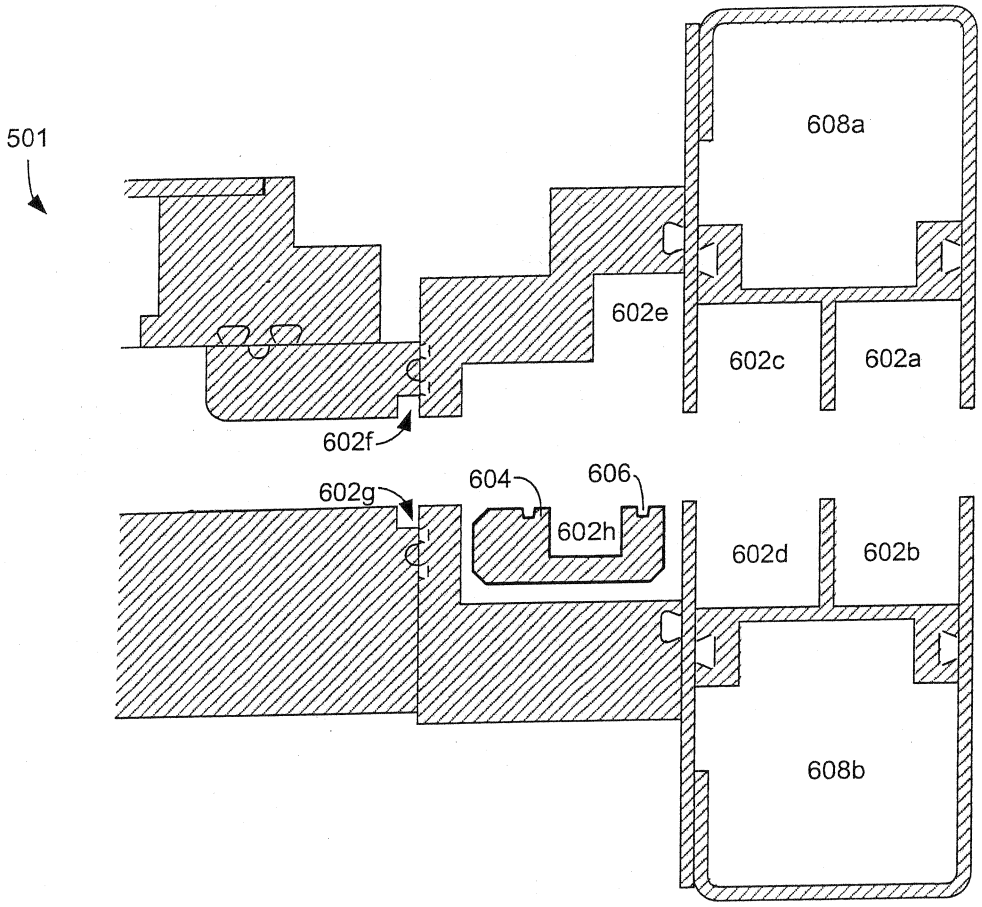

FIG. 7

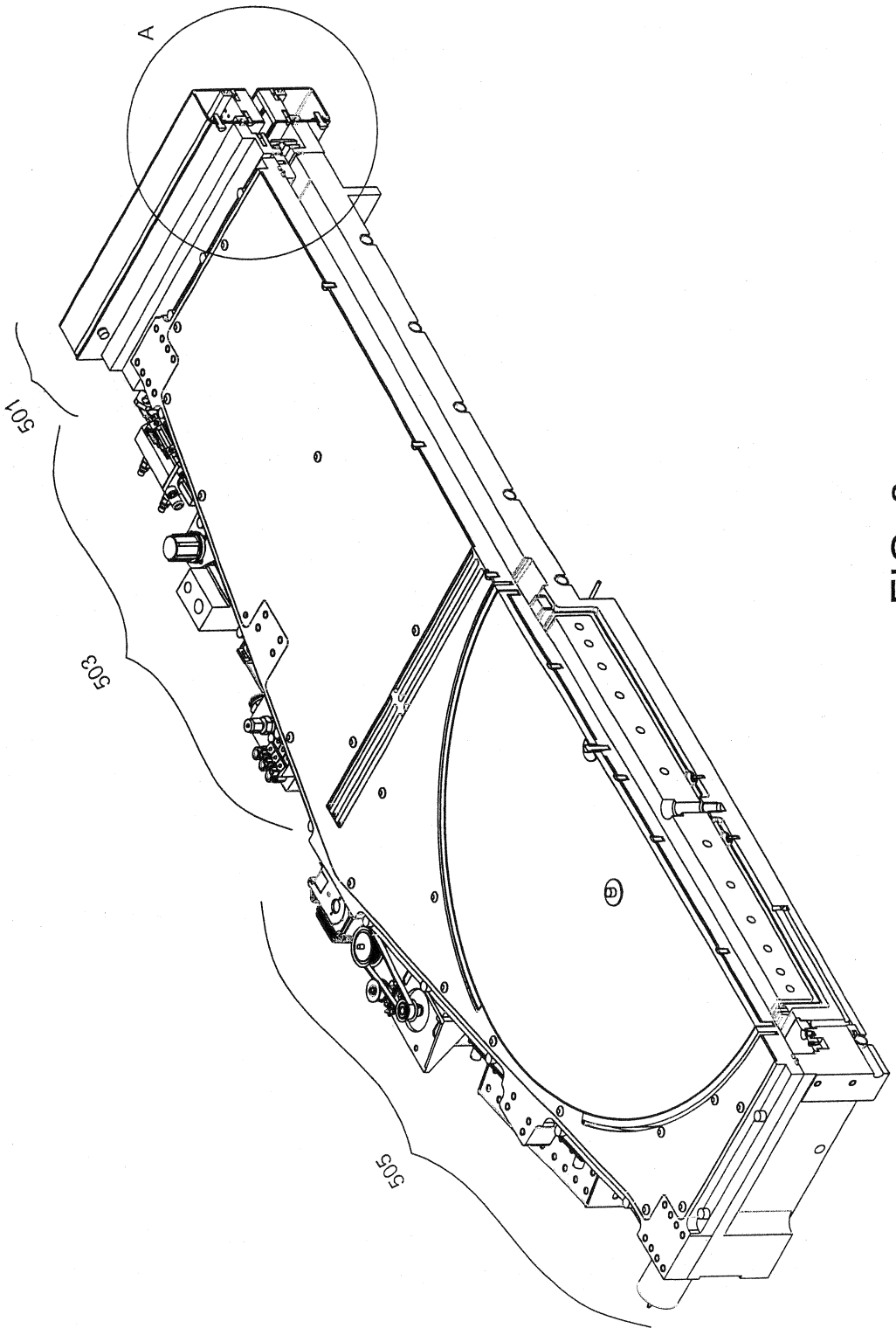

FIG. 8

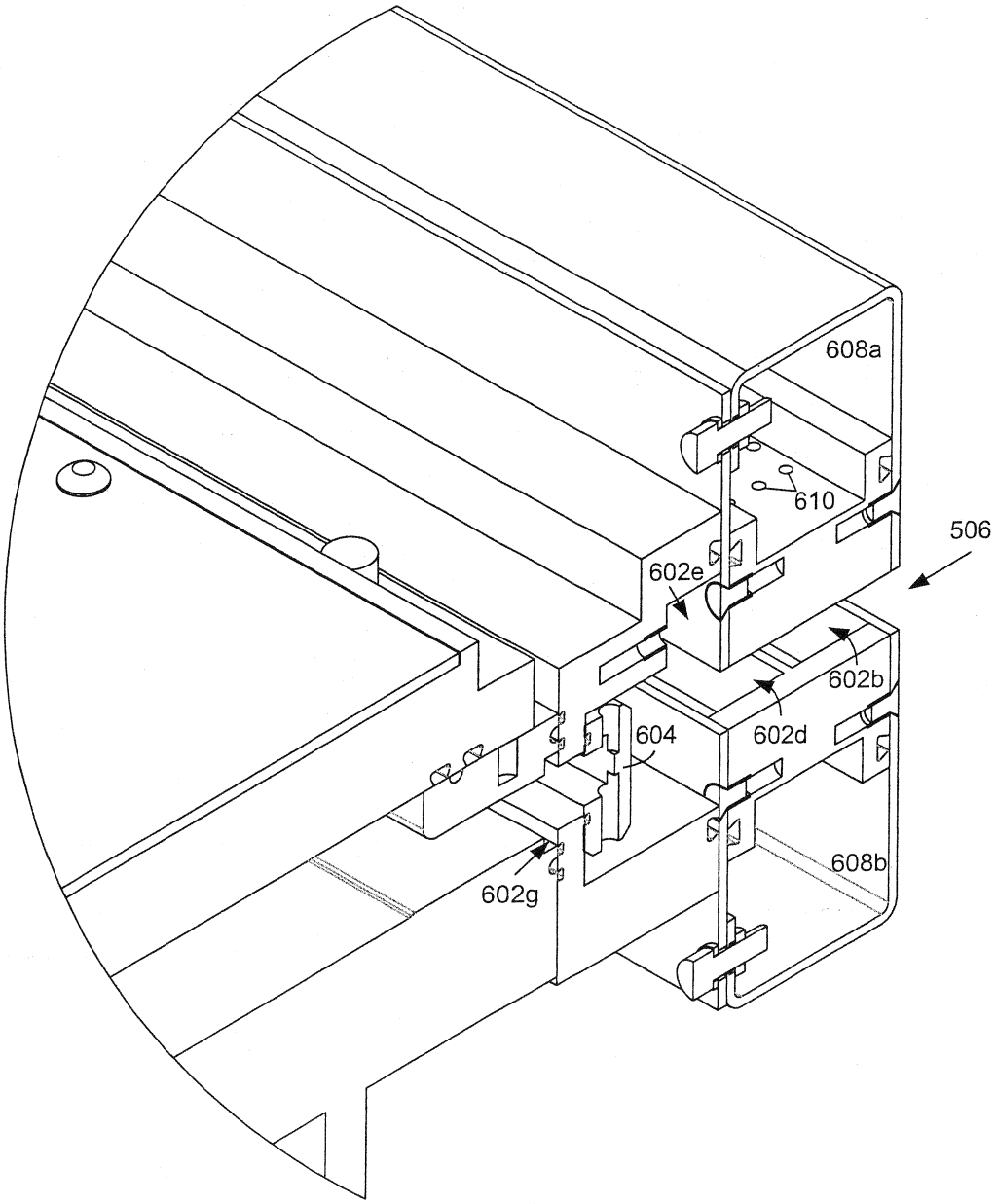

FIG. 9

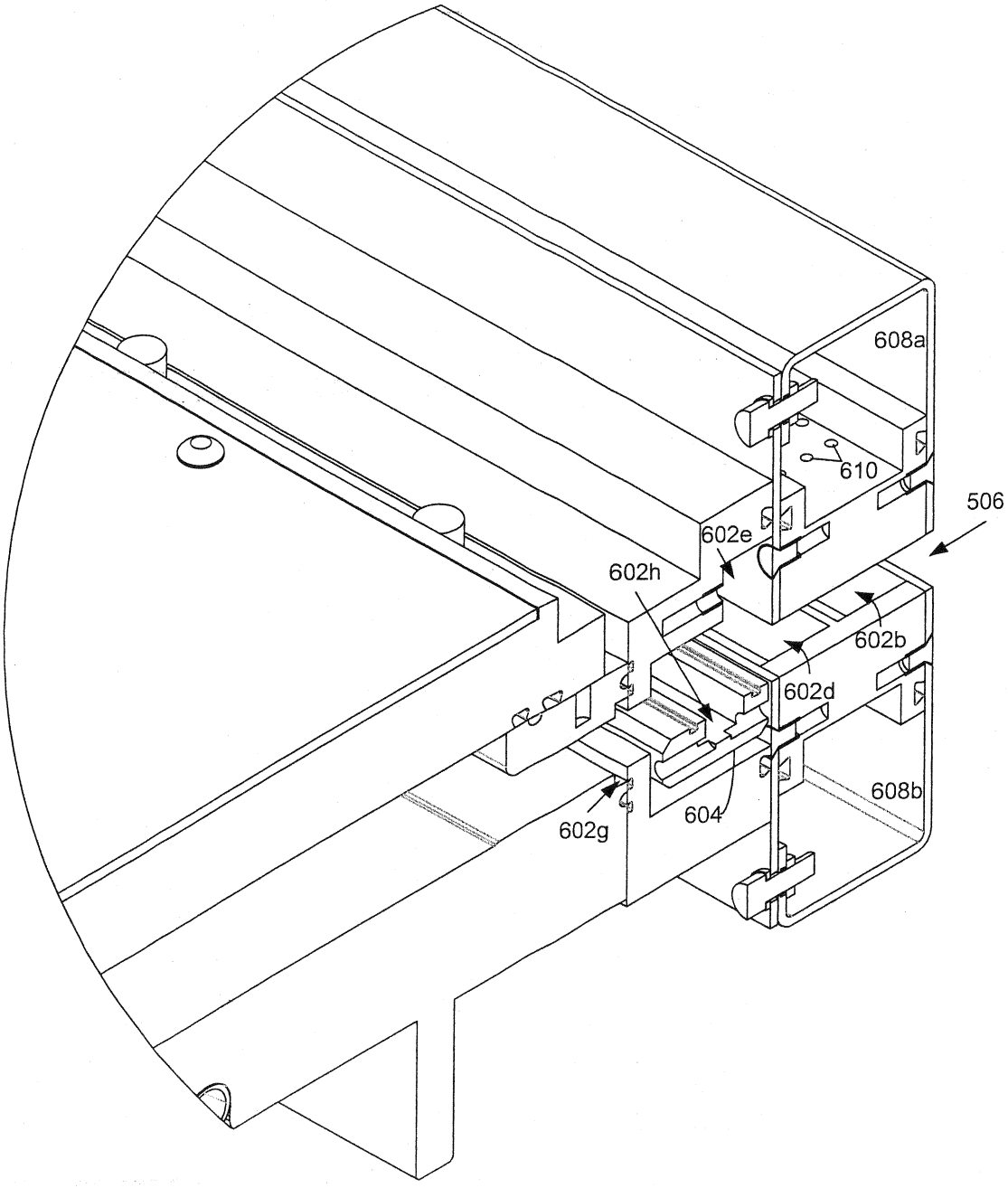

FIG. 10

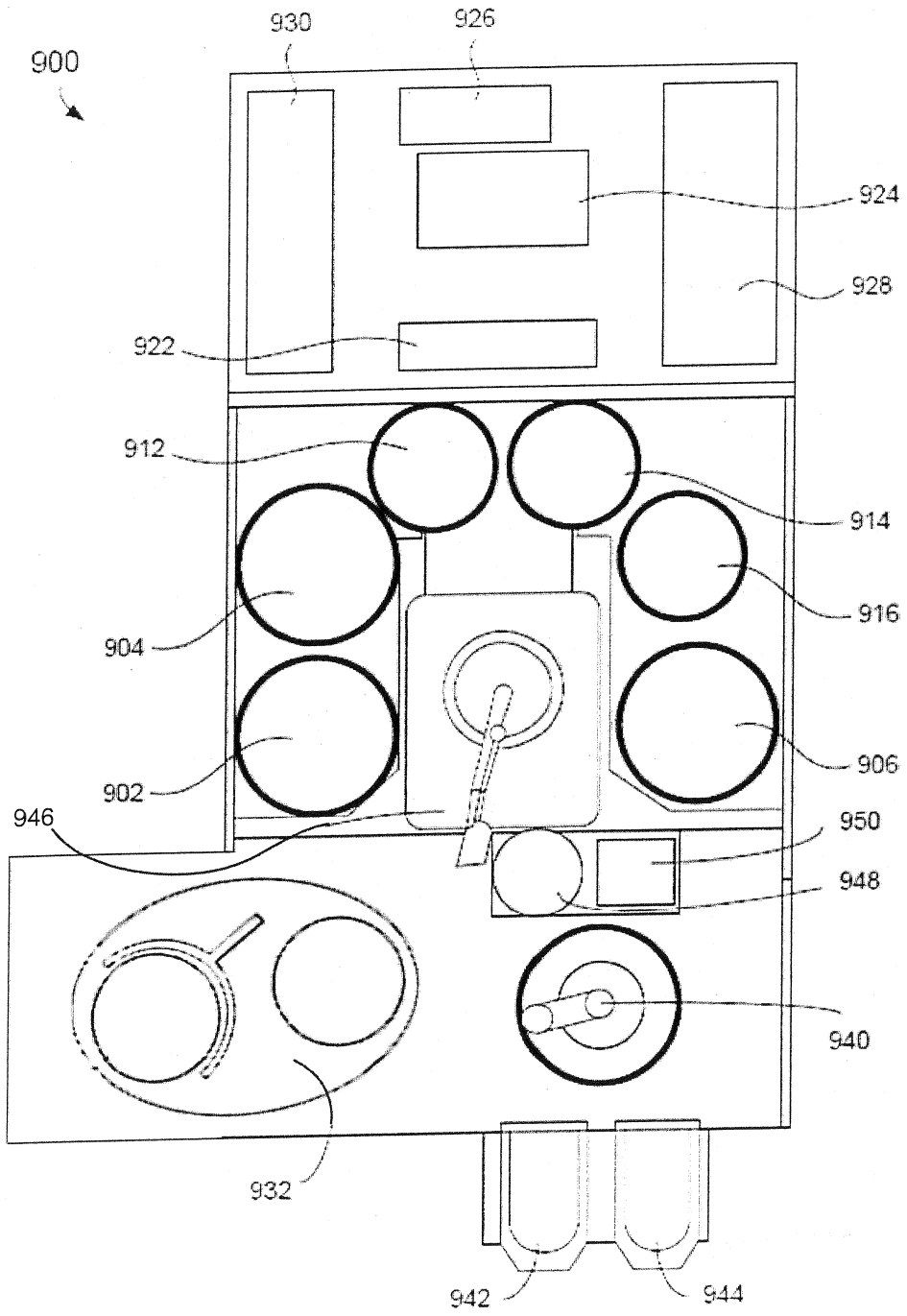
900
930
926
924
928
922
912
914
916
904
906
902
946
950
948
940
932
942
944

FIG. 11

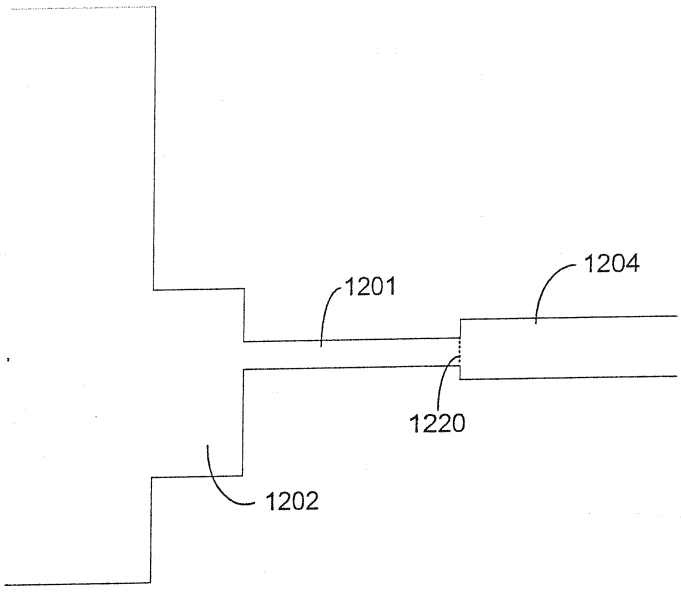

FIG. 12A

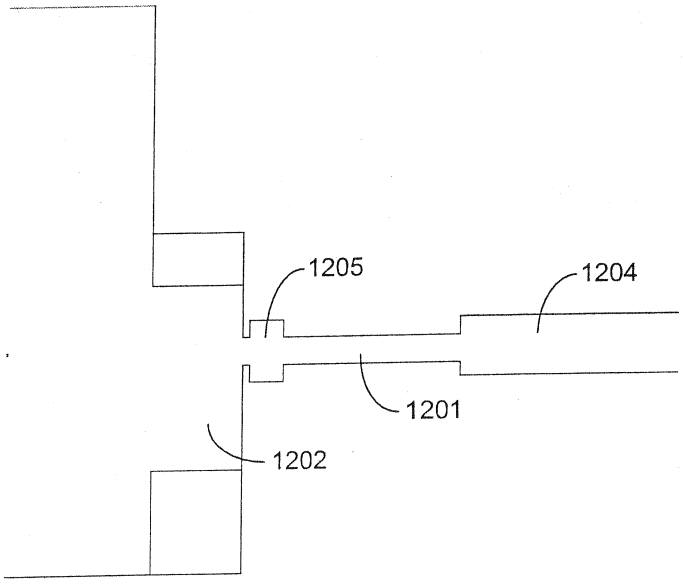

FIG. 12B

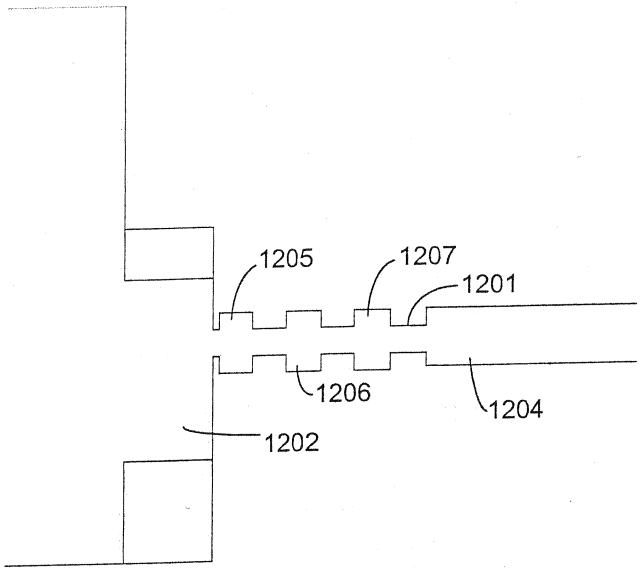

FIG. 12C

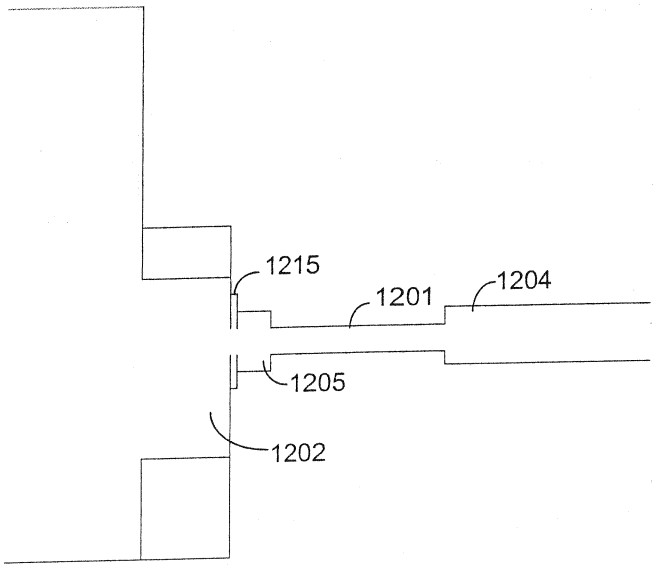

FIG. 12D

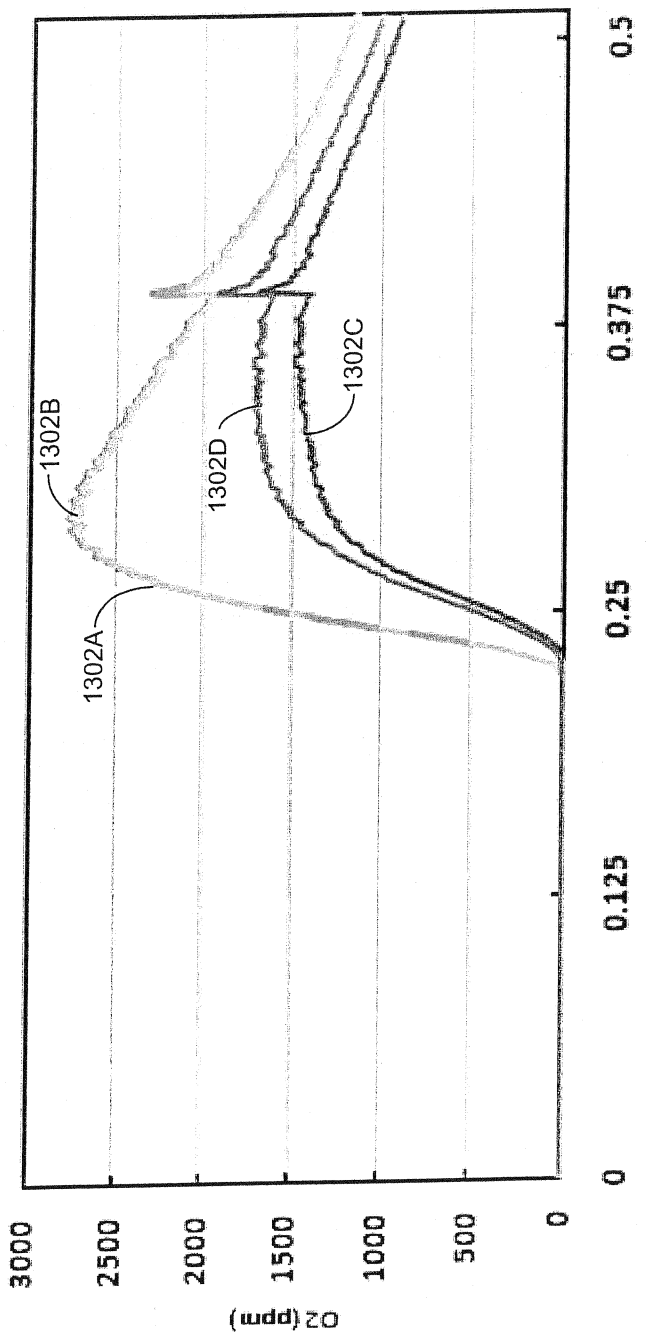
3000
2500
2000
1500
1000
500
0
O2 (ppm)
0
0.125
0.25
0.375
0.5
Time (sec)
1302A
1302B
1302C
1302D

FIG. 13

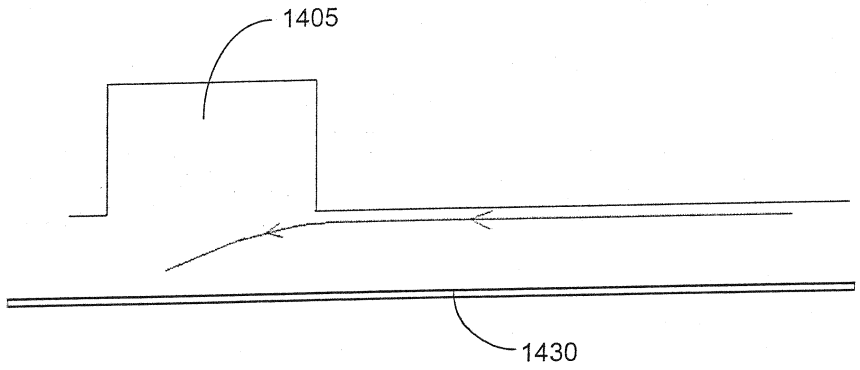

FIG. 14A

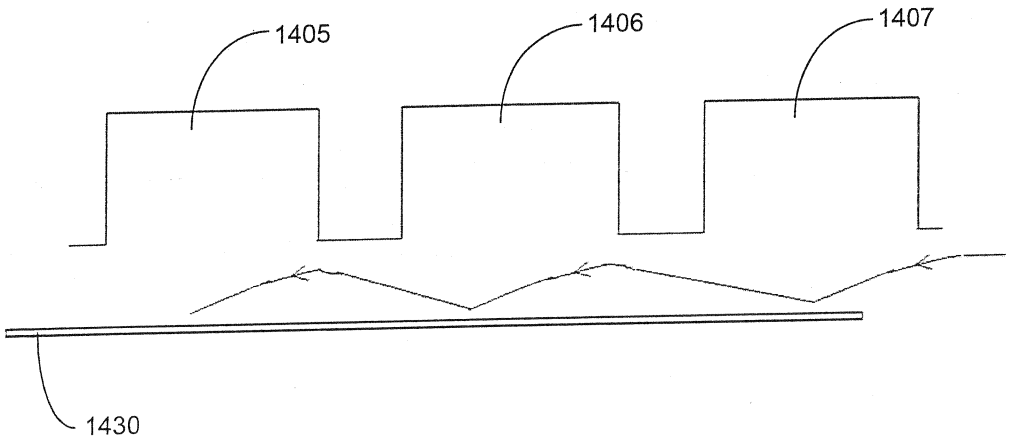

FIG. 14B

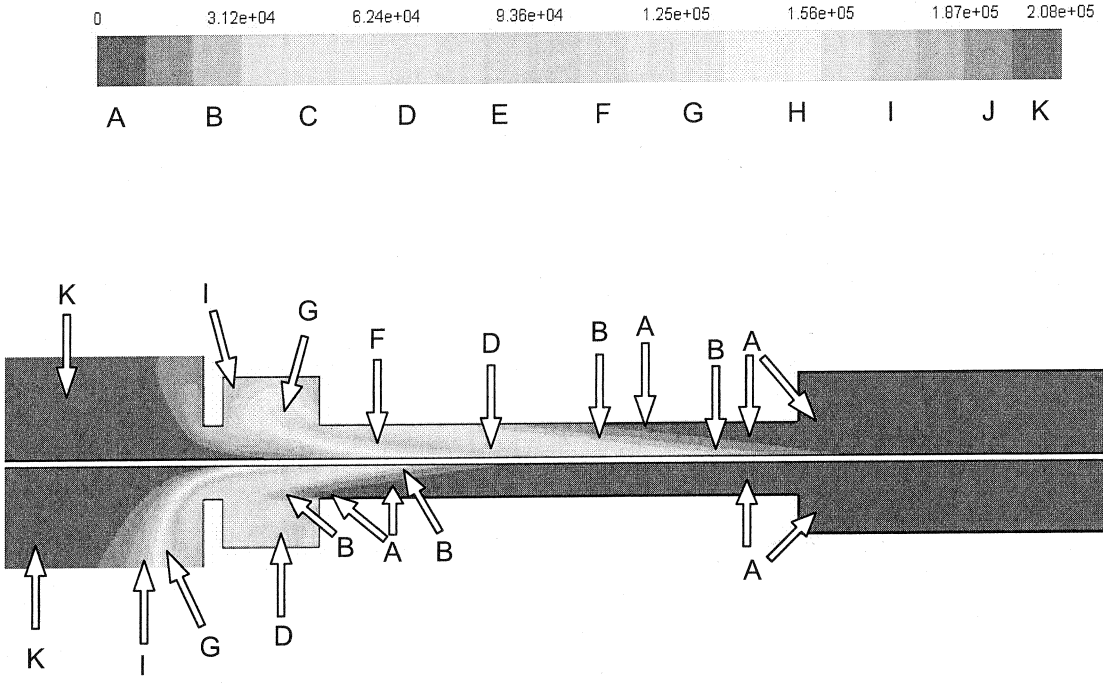

FIG. 15A

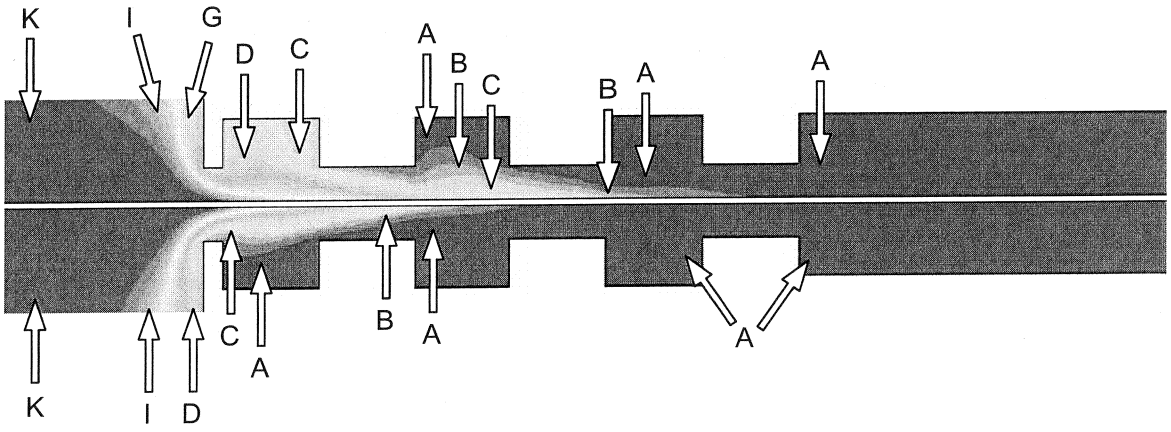

FIG. 15B