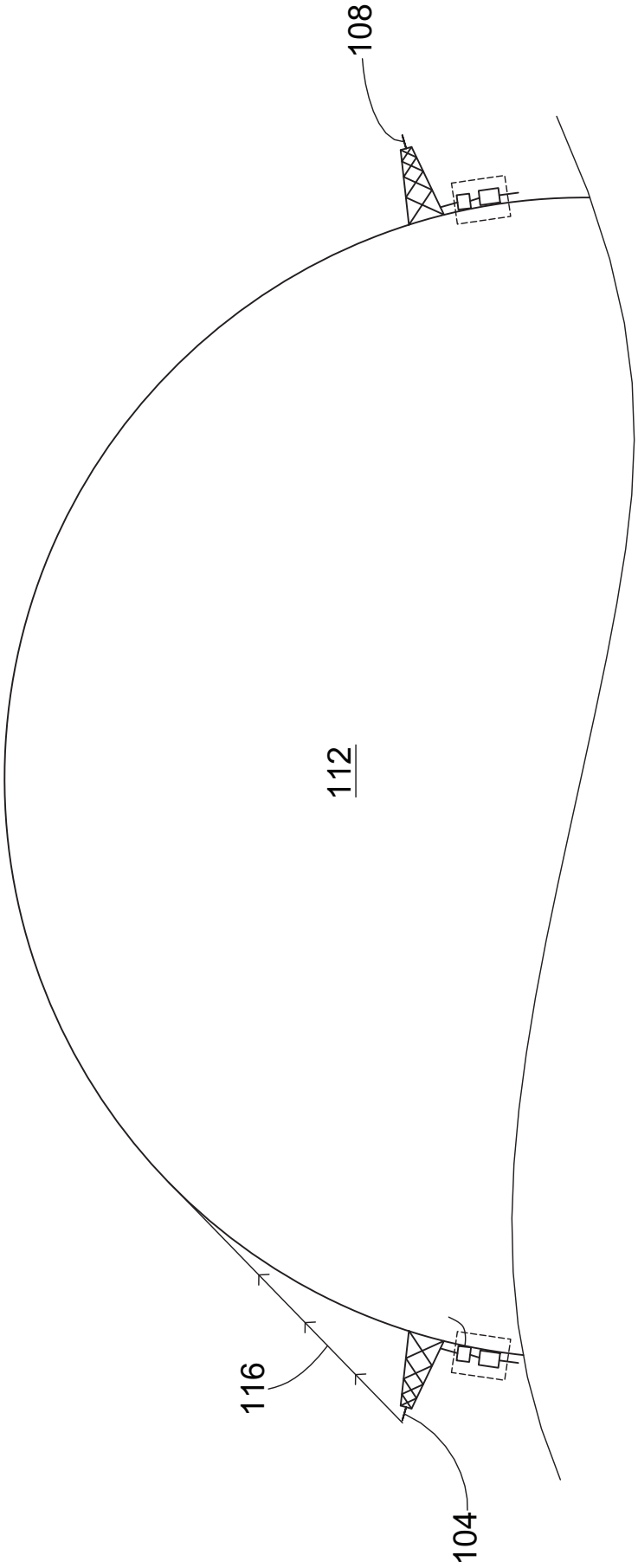


*Fig. 1*

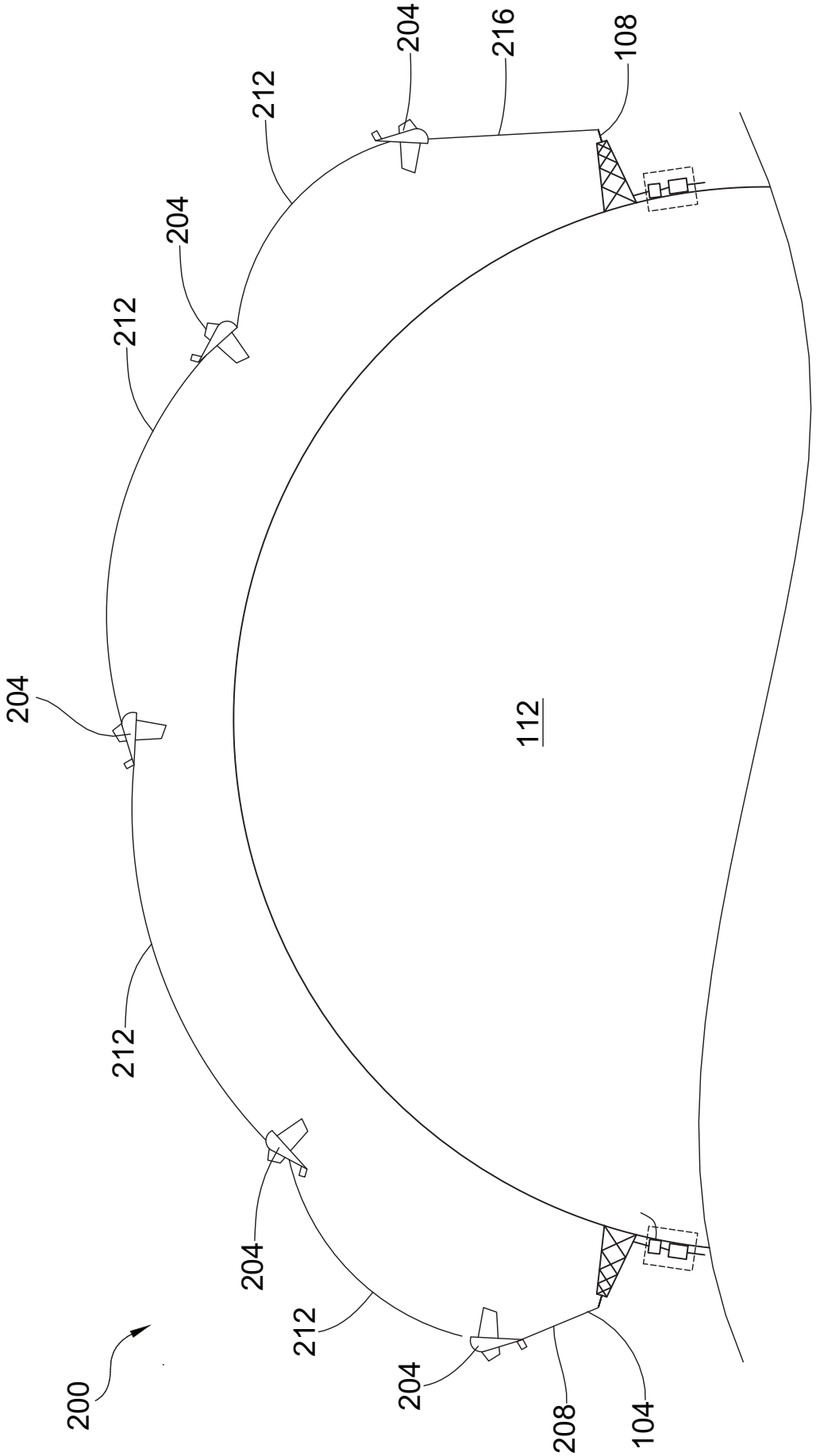


*Fig. 2*

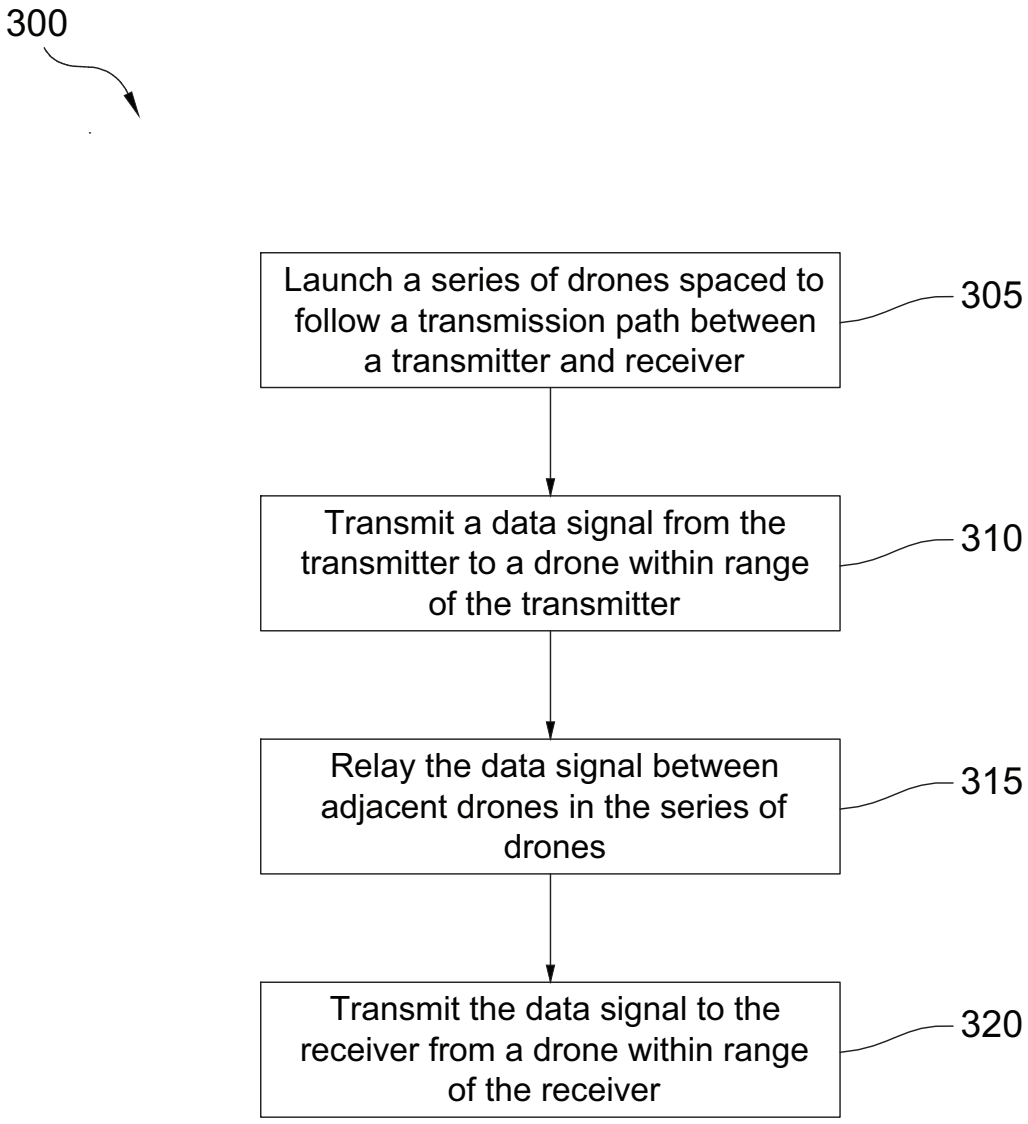
300
Launch a series of drones spaced to follow a transmission path between a transmitter and receiver
305
Transmit a data signal from the transmitter to a drone within range of the transmitter
310
Relay the data signal between adjacent drones in the series of drones
315
Transmit the data signal to the receiver from a drone within range of the receiver
320

***Fig. 3***

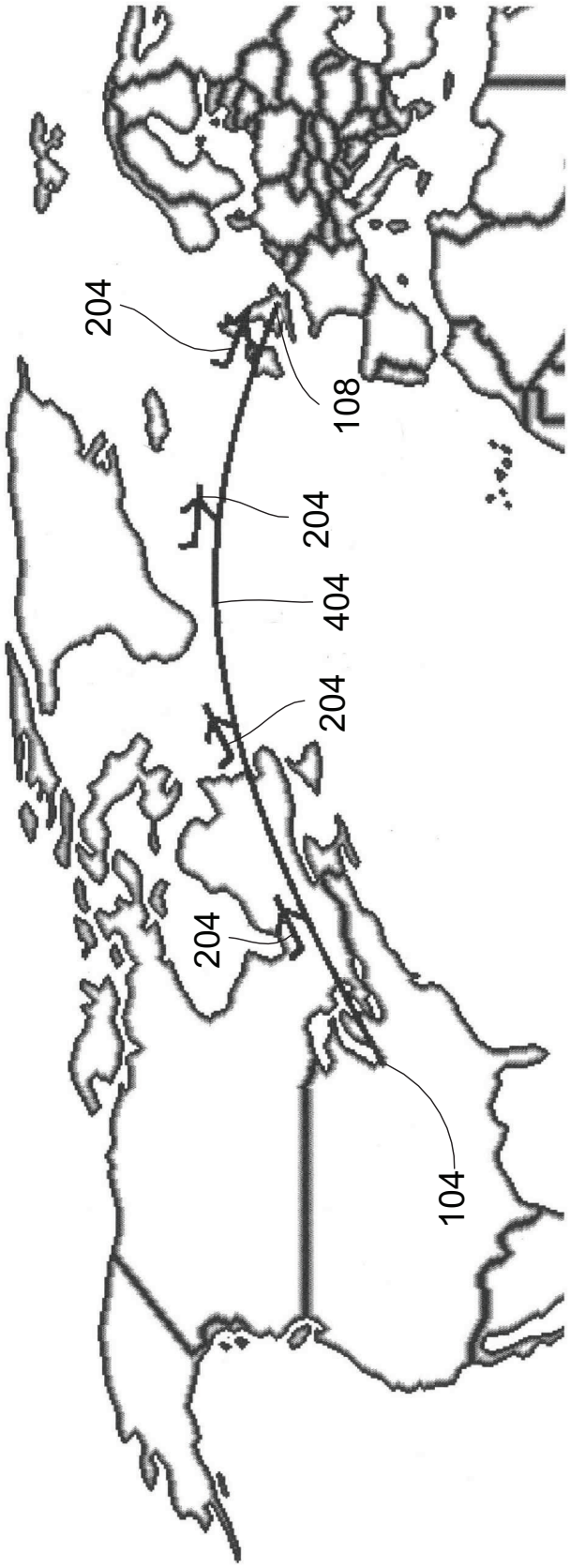


*Fig. 4*

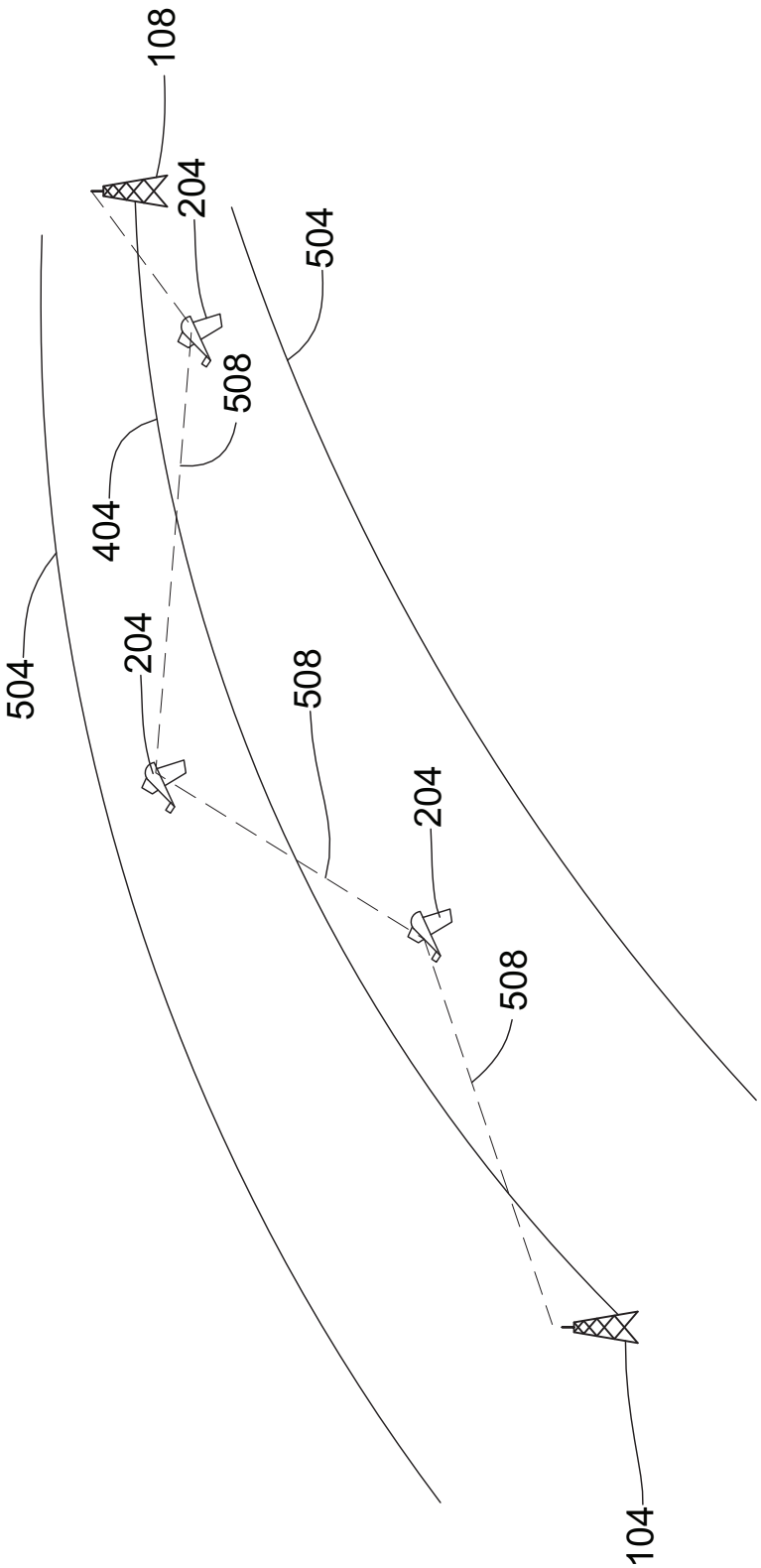


*Fig. 5*

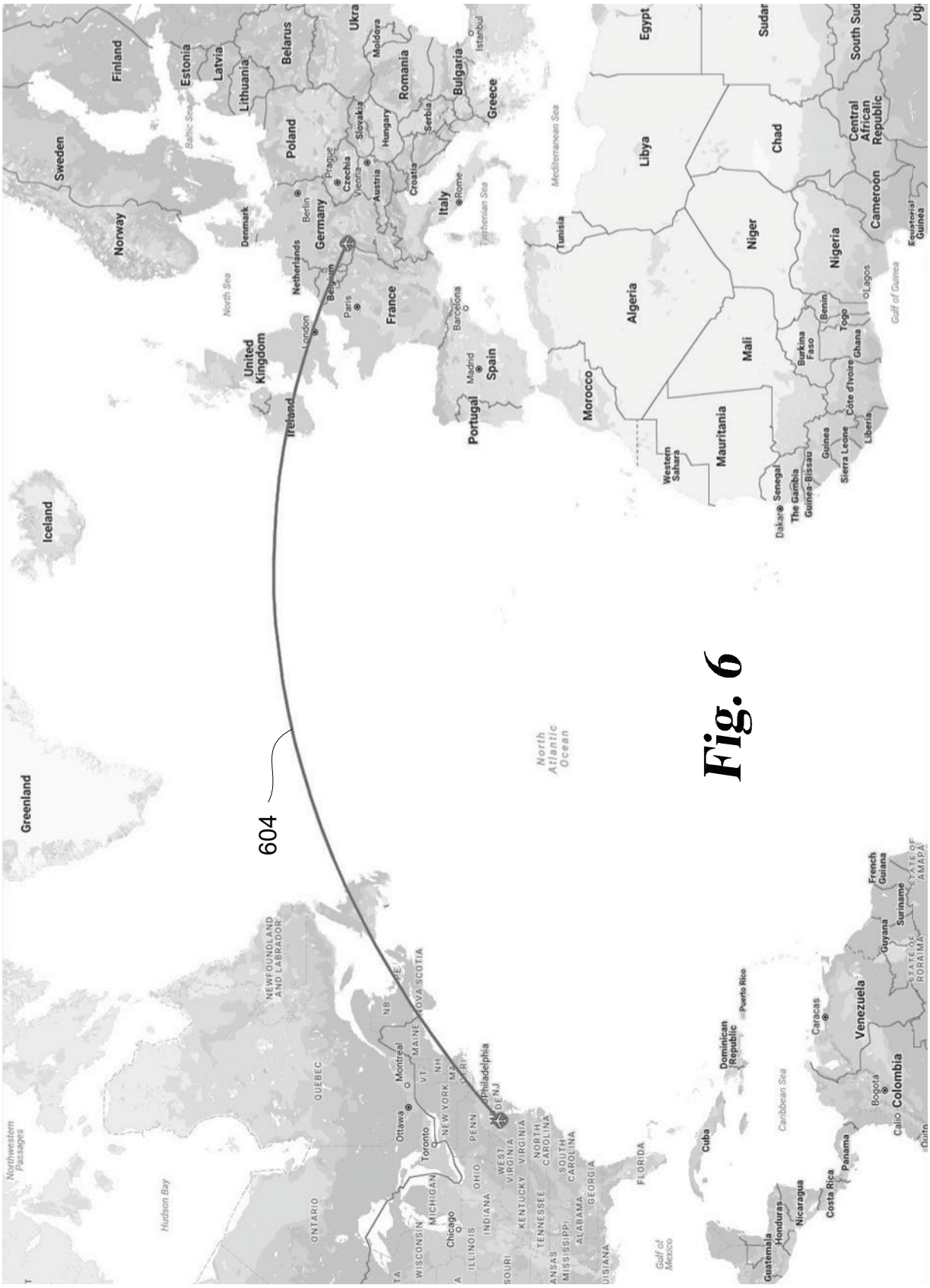
604
Greenland
Iceland
Norway
Sweden
Finland
Estonia
Latvia
Lithuania
Belarus
Poland
Denmark
Germany
Netherlands
Belgium
Ireland
United Kingdom
France
Spain
Portugal
Italy
Greece
Bulgaria
Romania
Serbia
Croatia
Austria
Czechia
Slovakia
Hungary
Moldova
Egypt
Libya
Algeria
Morocco
Tunisia
Mauritania
Mali
Niger
Chad
Nigeria
Cameroon
Central African Republic
Western Sahara
Senegal
The Gambia
Guinea-Bissau
Guinea
Sierra Leone
Liberia
Côte d'Ivoire
Burkina Faso
Ghana
Togo
Benin
Lagos
Equatorial Guinea
North Sea
Baltic Sea
Mediterranean Sea
Tyrrhenian Sea
Gulf of Guinea
North Atlantic Ocean
Northwestern Passages
Hudson Bay
Gulf of Mexico
Caribbean Sea
Cuba
Dominican Republic
Puerto Rico
Venezuela
Colombia
Caracas
Bogota
Panama
Costa Rica
Nicaragua
Honduras
Guatemala
Guyana
Suriname
French Guiana
Philadelphia
Montreal
Ottawa
Toronto
Chicago
NEWFOUNDLAND AND LABRADOR
QUEBEC
ONTARIO
NOVA SCOTIA
MAINE
NEW YORK
PENN
OHIO
INDIANA
ILLINOIS
WISCONSIN
MICHIGAN
WEST VIRGINIA
KENTUCKY
VIRGINIA
NORTH CAROLINA
SOUTH CAROLINA
TENNESSEE
ALABAMA
GEORGIA
FLORIDA
MISSISSIPPI
ARKANSAS
NEW JERSEY
DENMARK
Berlin
Prague
Vienna
Paris
London
Madrid
Barcelona
Rome
Istanbul
Moldova
Ukra
Egypt
Sudan
South Sud
Ug

Fig. 6

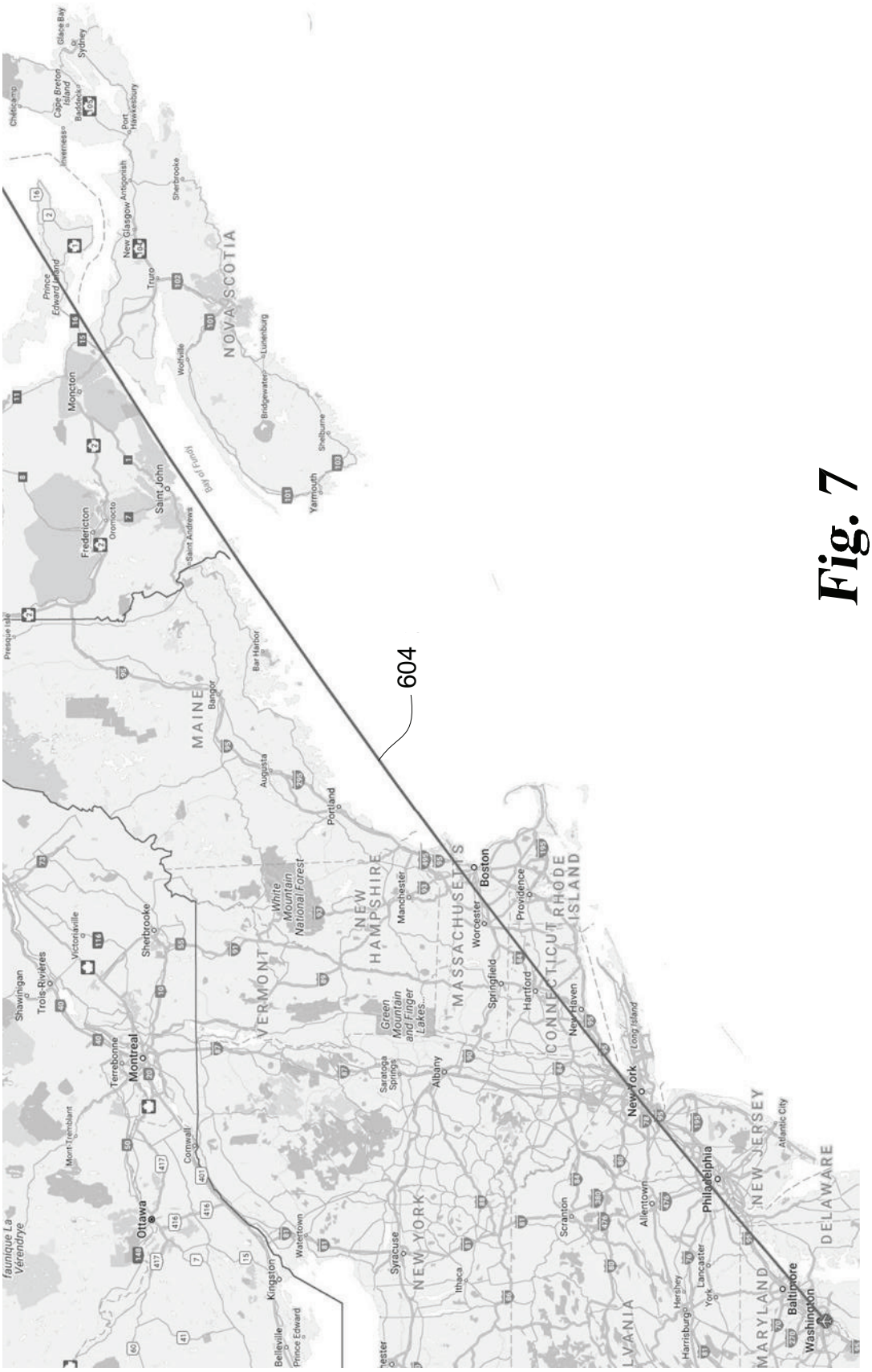
604
NOVA SCOTIA
MAINE
VERMONT
NEW HAMPSHIRE
MASSACHUSETTS
CONNECTICUT
RHODE ISLAND
NEW YORK
NEW JERSEY
DELAWARE
MARYLAND
Boston
Montreal
Ottawa
Philadelphia
Baltimore
Washington
Bay of Fundy
Prince Edward Island
Cape Breton Island
Saint John
Fredericton
Moncton
Truro
Sherbrooke
Portland
Bangor
Augusta
Manchester
Worcester
Providence
Springfield
Hartford
New Haven
Albany
Syracuse
Ithaca
Scranton
Allentown
Lancaster
Harrisburg
Kingston
Watertown
Cornwall
Terrebonne
Shawinigan
Trois-Rivières
Victoriaville
Mont-Tremblant
Saratoga Springs
Long Island
Atlantic City
Bar Harbor
Presque Isle
Saint Andrews
Oromocto
Wolfville
Lunenburg
Bridgewater
Shelburne
Yarmouth
Port Hawkesbury
Antigonish
New Glasgow
Inverness
Baddeck
Sydney
Glace Bay
Chéticamp
White Mountain National Forest
Green Mountain and Finger Lakes
faunique La Vérendrye

*Fig. 7*


604
United Kingdom
Ireland
Netherlands
Belgium
ENGLAND
WALES
NORTHERN IRELAND
Isle of Man
Guernsey
Jersey
Amsterdam
The Hague
Rotterdam
Antwerp
Brussels
Ghent
Bremen
Dortmund
Cologne
Frankfurt
London
Liverpool
Leeds
Sheffield
Dublin
Cork
Limerick
Galway
Belfast
Cardiff
Bristol
Swansea
Plymouth
Exeter
Southampton
Portsmouth
Brighton
Reading
Oxford
Cambridge
Norwich
Ipswich
Colchester
Peterborough
Leicester
Nottingham
Hull
York
Newcastle upon Tyne
Durham
Middlesbrough
Blackpool
Chester
Swindon
Bath
Torquay
Newquay
Truro
Falmouth
St. Ives
Penzance
Lille
Calais
Arras
Amiens
Rouen
Le Havre
Caen
Reims
Metz
Saarbrücken
Trier
Luxembourg City
Koblenz
Wiesbaden
Mainz
Mannheim
Heidelberg
Karlsruhe
Aachen
Liège
Eindhoven
Arnhem
Groningen
Leeuwarden
Alkmaar
Bremerhaven
Wilhelmshaven
Oldenburg
Osnabrück
Bielefeld
Paderborn
Münster
Essen
Düsseldorf
Bonn
Cuxhaven
Esbjerg
Kolding
Flensburg
Husum
Schleswig
Nationalpark Vadehavet
Google map
English Channel
Celtic Sea

*Fig. 8*

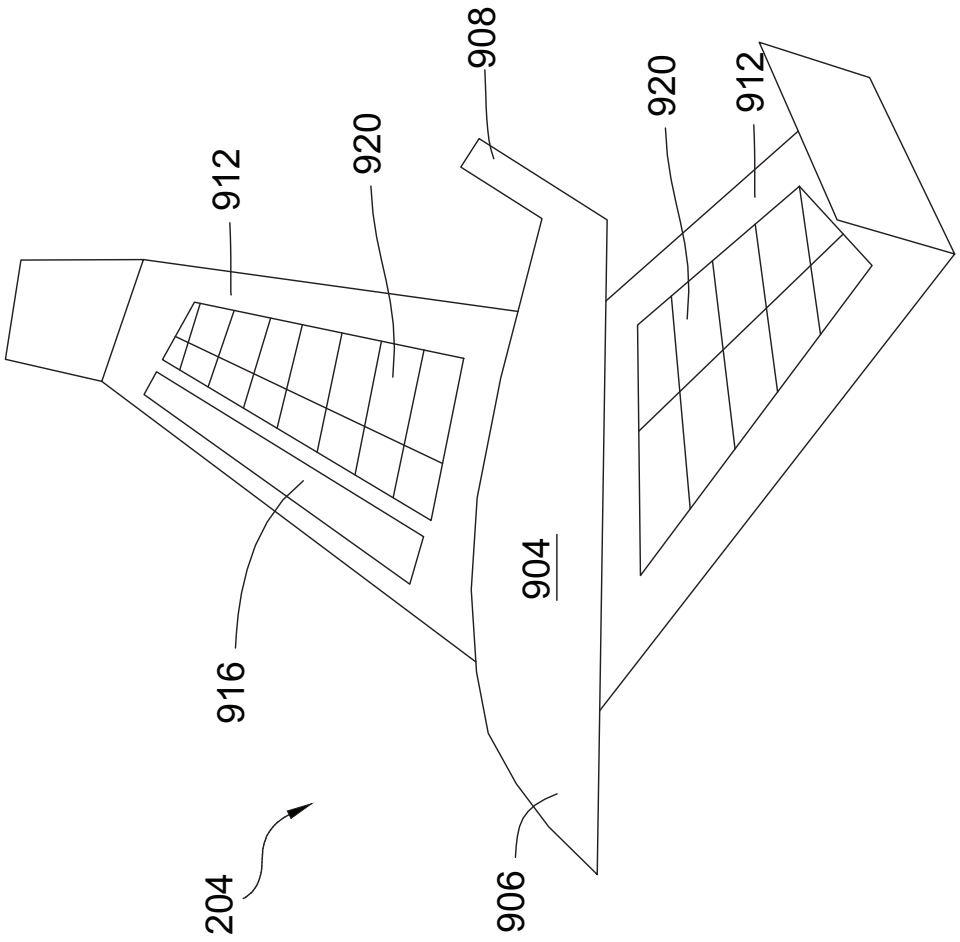


*Fig. 9*

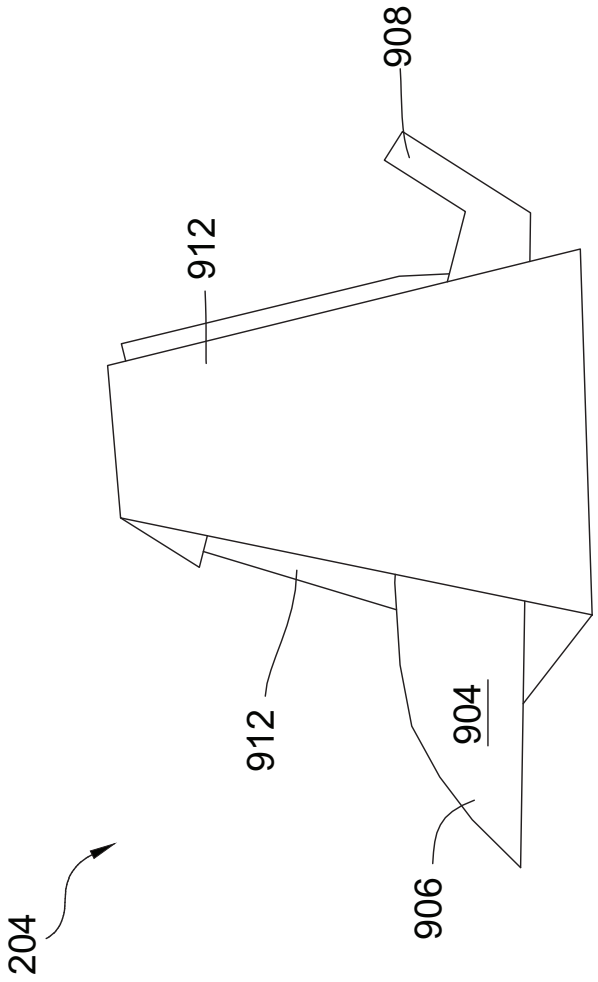


*Fig. 10*