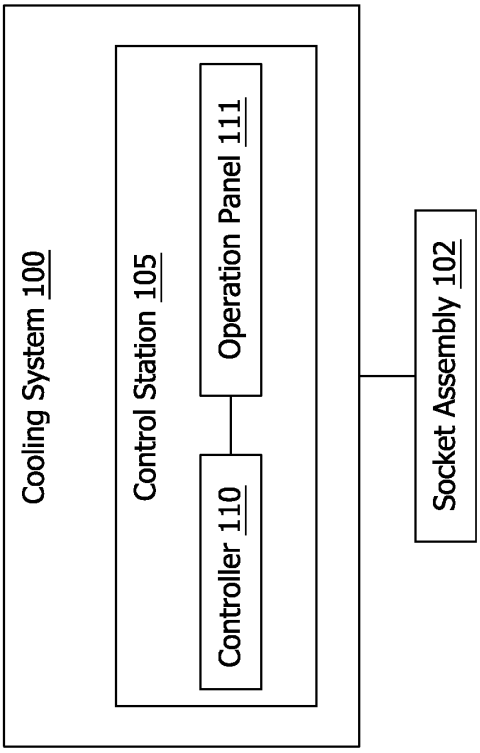
Cooling System 100
Control Station 105
Operation Panel 111
Controller 110
Socket Assembly 102

FIG. 1A

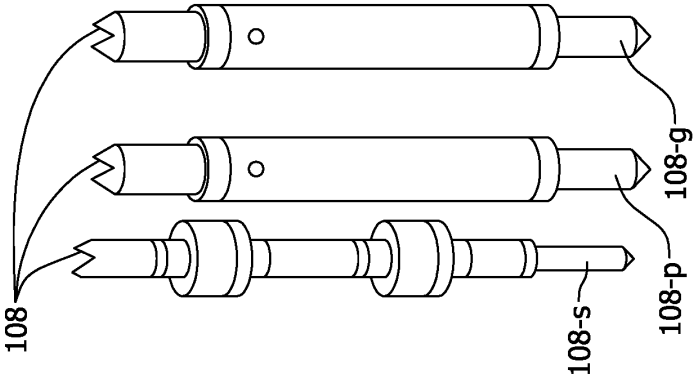
108
108-s
108-p
108-g

FIG. 1C

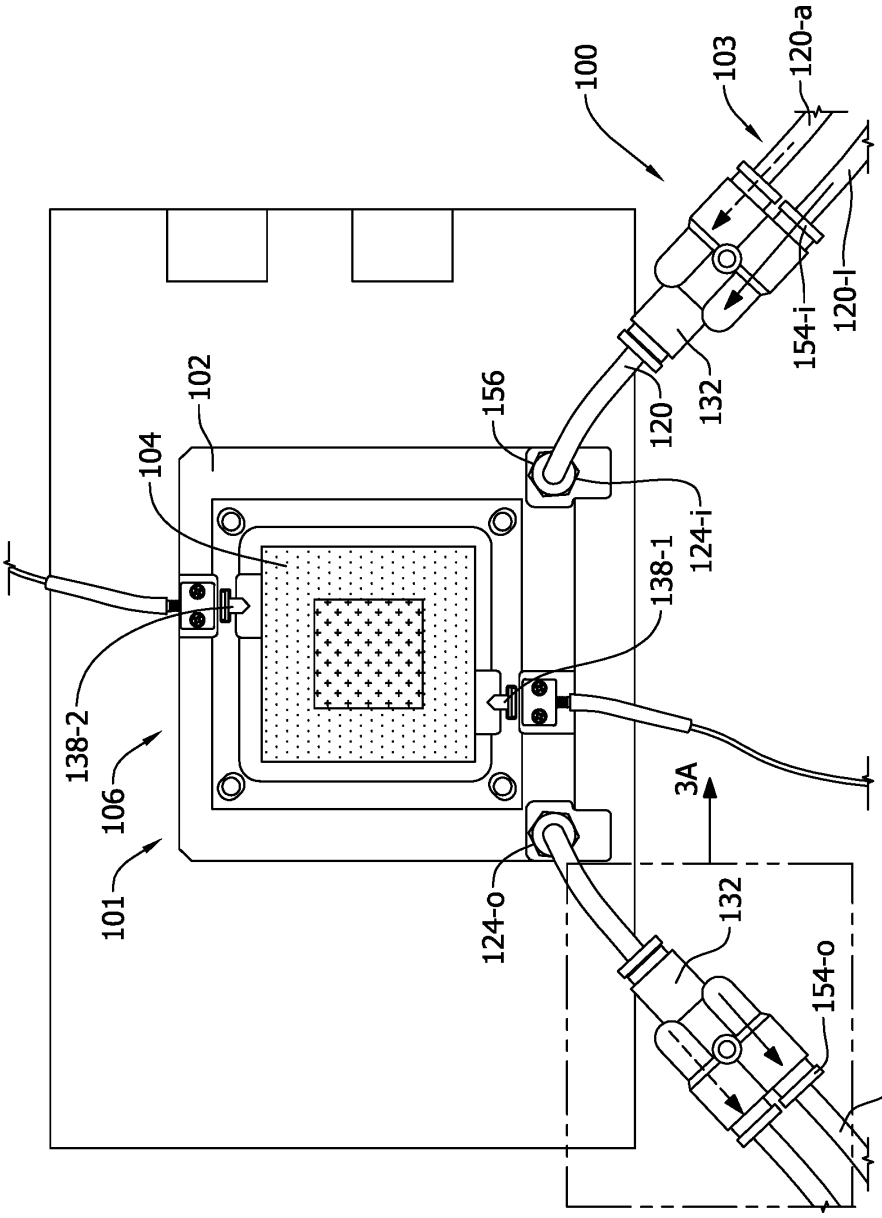
100
103
120-a
120-l
154-i
132
120
156
124-i
102
104
138-1
138-2
106
101
3A
124-o
132
154-o
120

FIG. 1B

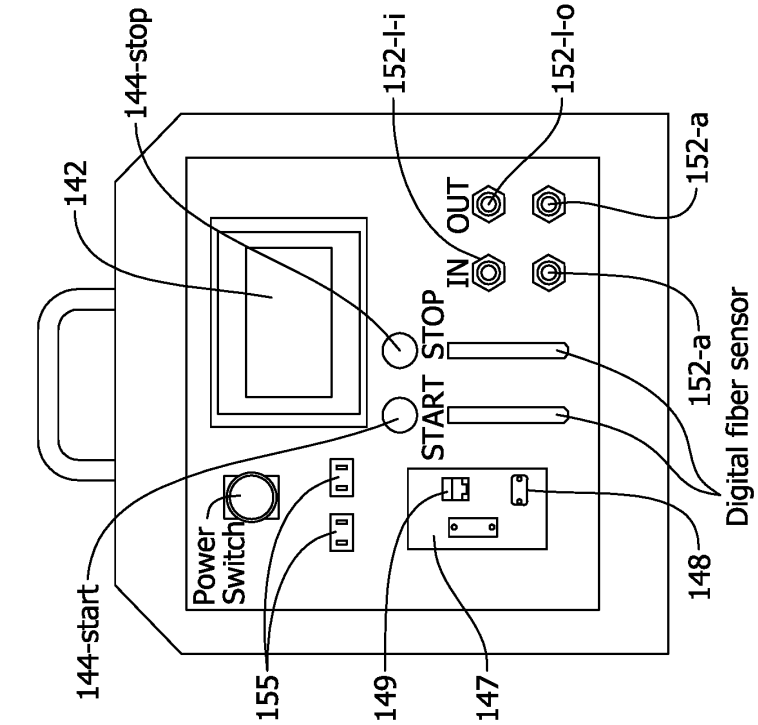
144-stop
152-l-i
152-l-o
142
152-a
OUT
IN
152-a
STOP
START
Digital fiber sensor
Power Switch
148
144-start
155
149
147

FIG. 1E

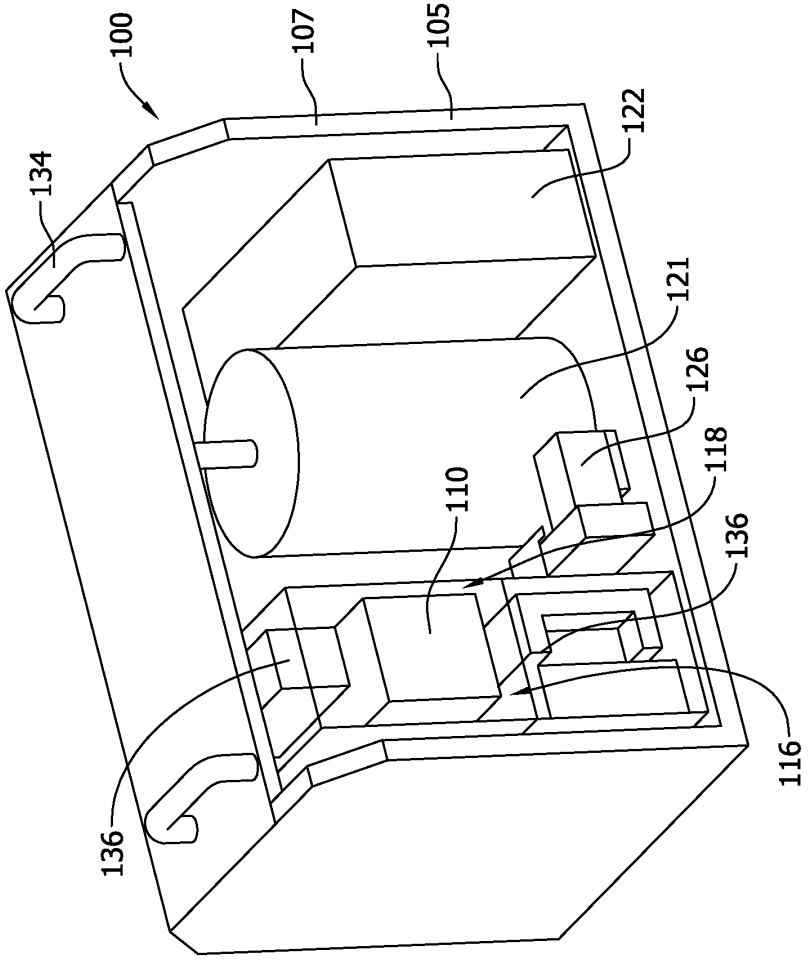
100
107
105
122
134
121
126
118
110
136
136
116

FIG. 1D

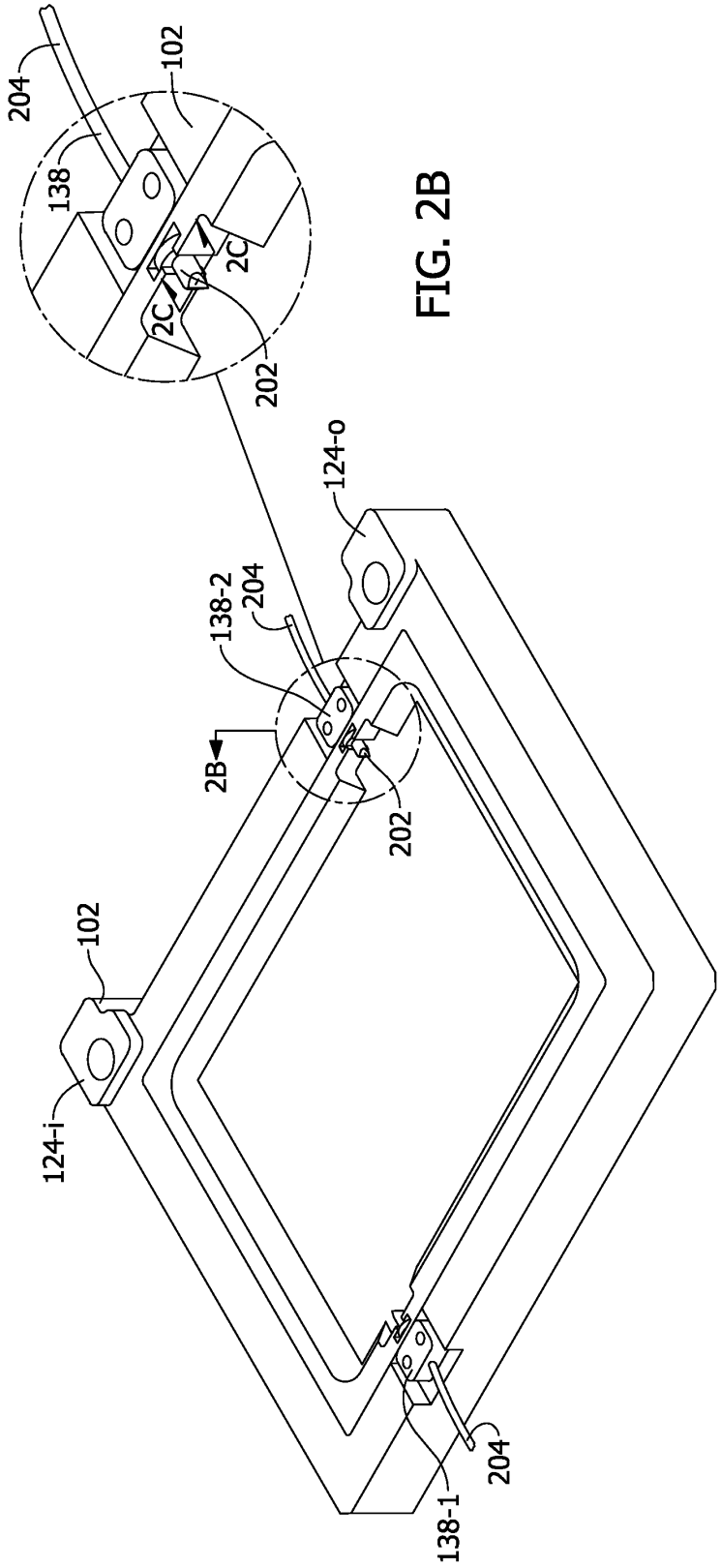

FIG. 2A

FIG. 2B

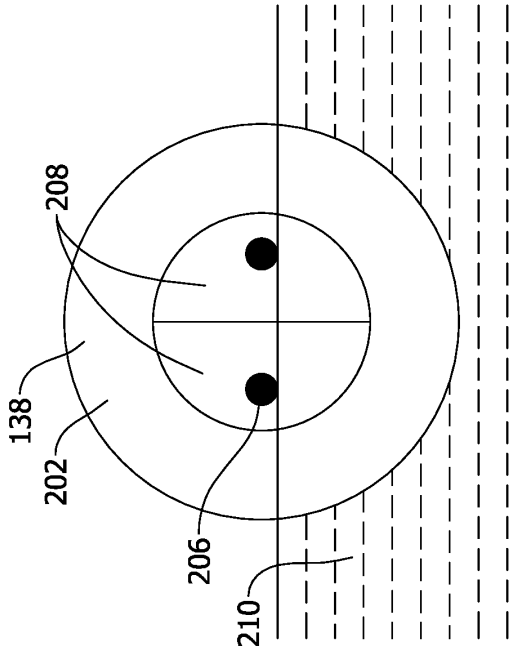

FIG. 2D

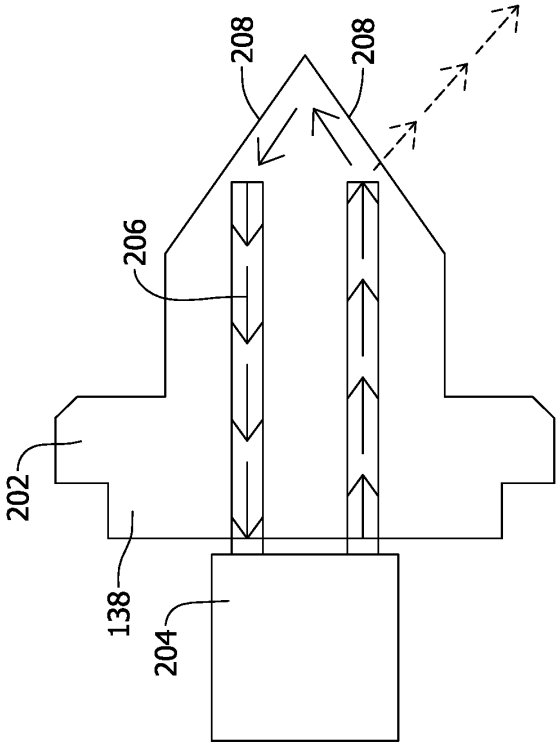

FIG. 2C

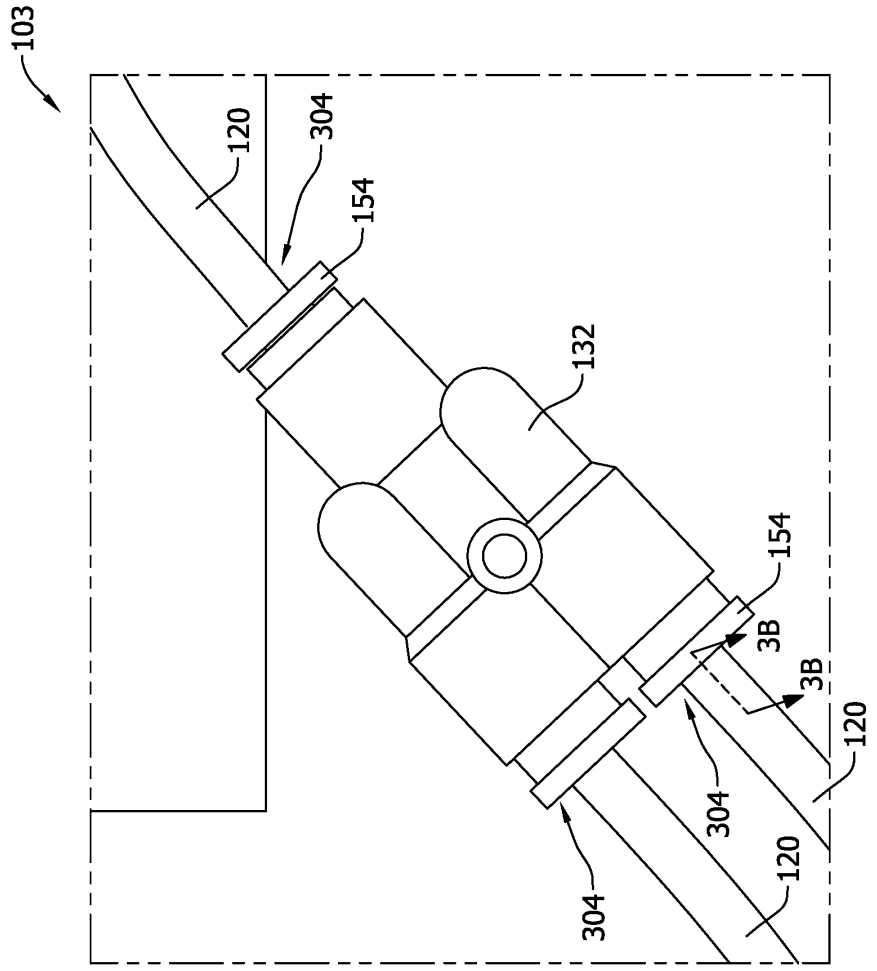

FIG. 3A

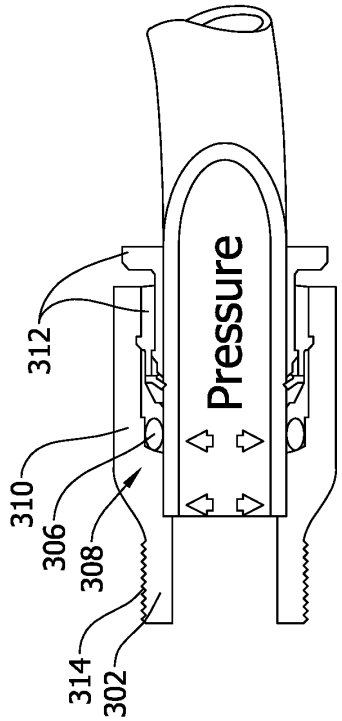
Pressure
312
310
306
308
314
302

FIG. 3C

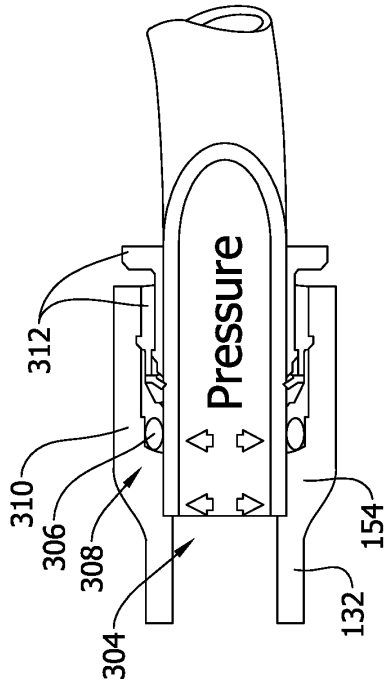
Pressure
312
310
306
308
304
154
132

FIG. 3B

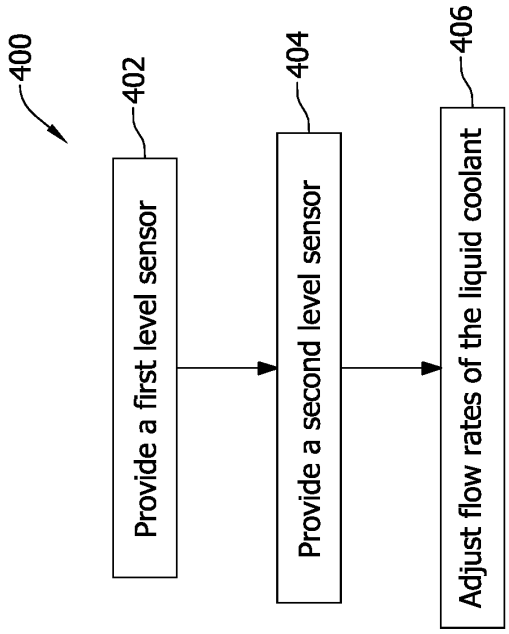
400
402
Provide a first level sensor
404
Provide a second level sensor
406
Adjust flow rates of the liquid coolant

FIG. 4A

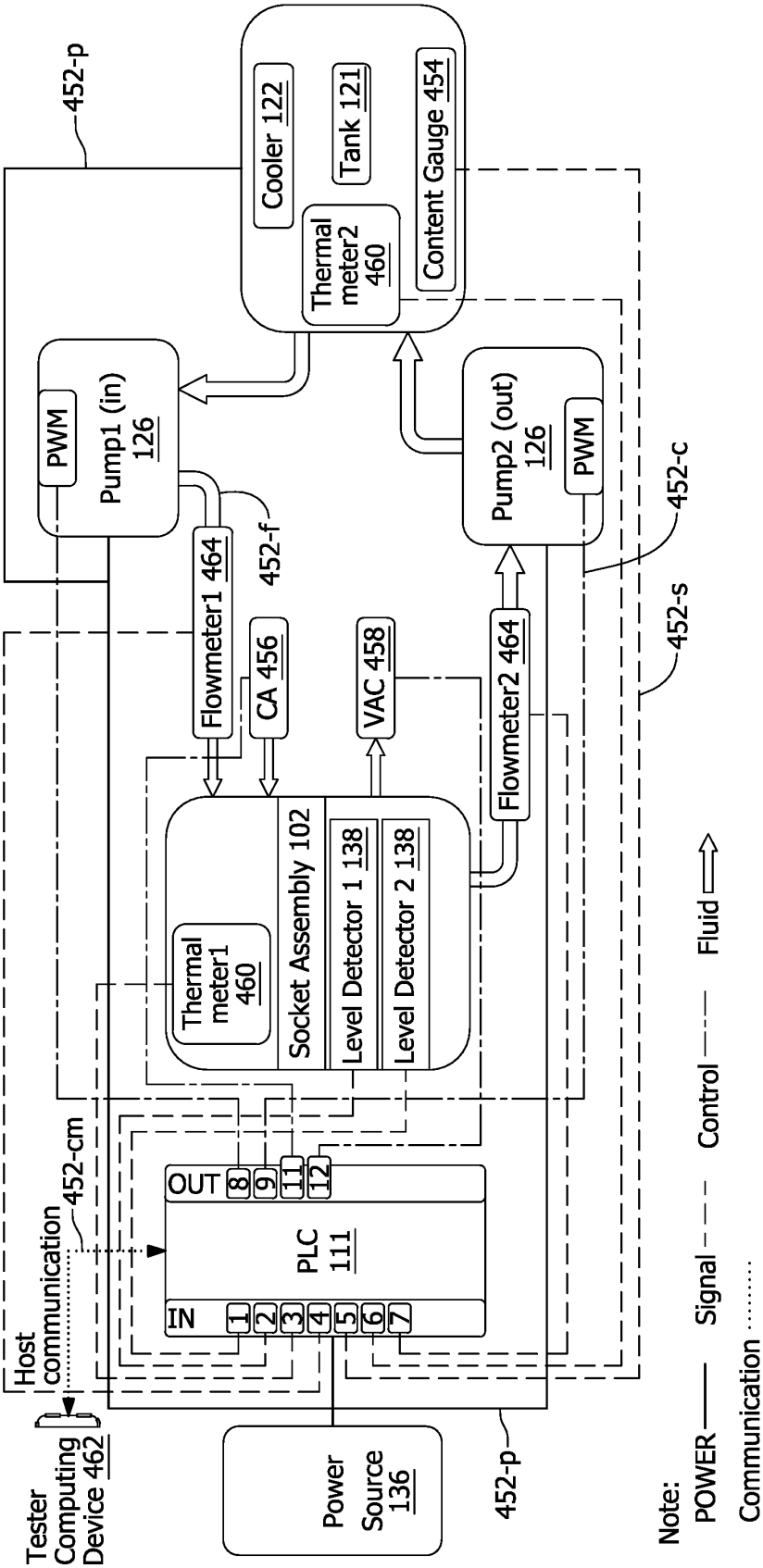
452-p
Cooler 122
Tank 121
Content Gauge 454
Thermal meter2 460
PWM
Pump1 (in) 126
Pump2 (out) 126
PWM
452-c
452-f
Flowmeter1 464
CA 456
VAC 458
Flowmeter2 464
452-s
Thermal meter1 460
Socket Assembly 102
Level Detector 1 138
Level Detector 2 138
OUT
8
9
11
12
PLC 111
IN
1
2
3
4
5
6
7
452-cm
Host communication
Tester Computing Device 462
Power Source 136
452-p
Note:
POWER
Signal
Control
Fluid
Communication

FIG. 4B