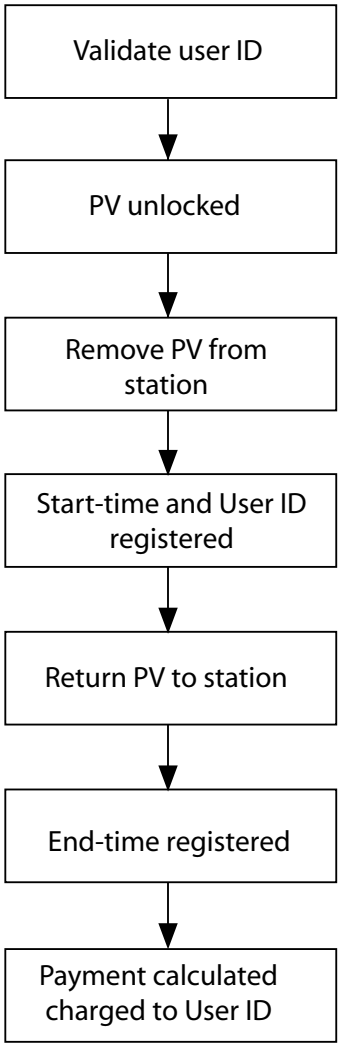
Validate user ID
PV unlocked
Remove PV from station
Start-time and User ID registered
Return PV to station
End-time registered
Payment calculated charged to User ID

FIG. 1

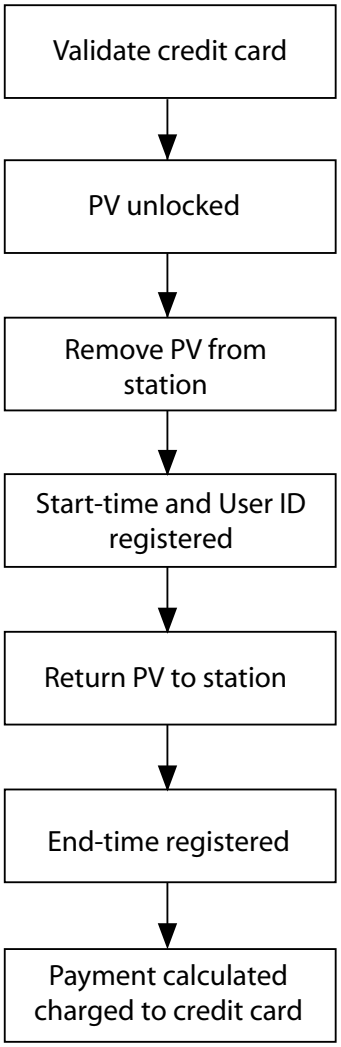
Validate credit card
PV unlocked
Remove PV from station
Start-time and User ID registered
Return PV to station
End-time registered
Payment calculated charged to credit card

FIG. 2

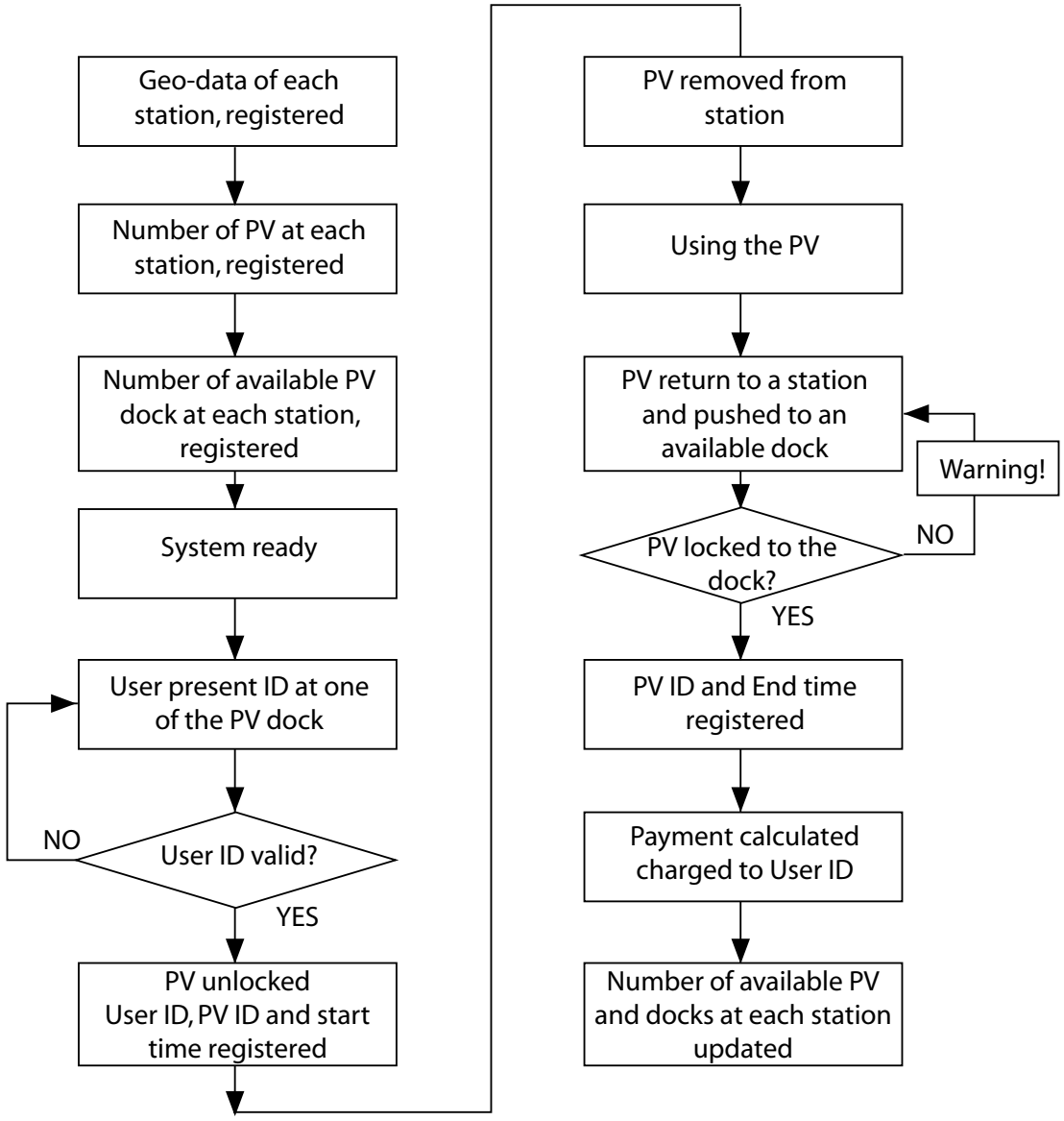
Geo-data of each station, registered
Number of PV at each station, registered
Number of available PV dock at each station, registered
System ready
User present ID at one of the PV dock
User ID valid?
NO
YES
PV unlocked
User ID, PV ID and start time registered
PV removed from station
Using the PV
PV return to a station and pushed to an available dock
Warning!
PV locked to the dock?
NO
YES
PV ID and End time registered
Payment calculated charged to User ID
Number of available PV and docks at each station updated

FIG. 3

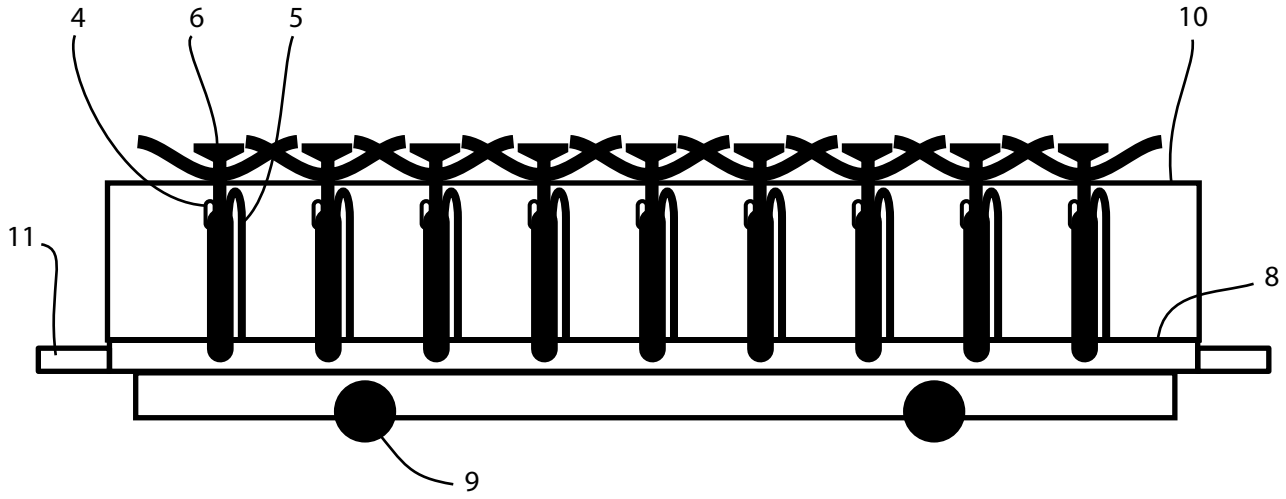


FIG. 4

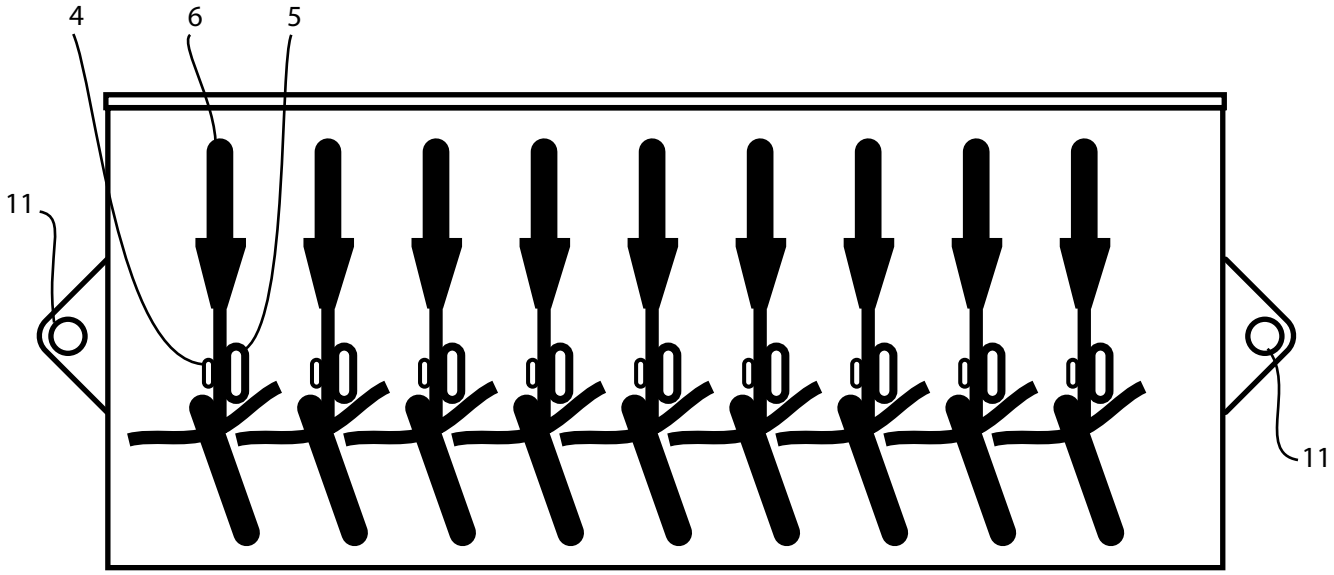


FIG. 5

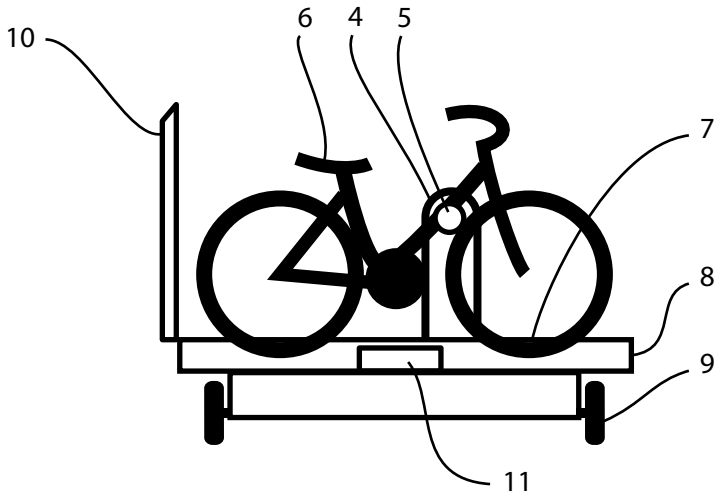


FIG. 6

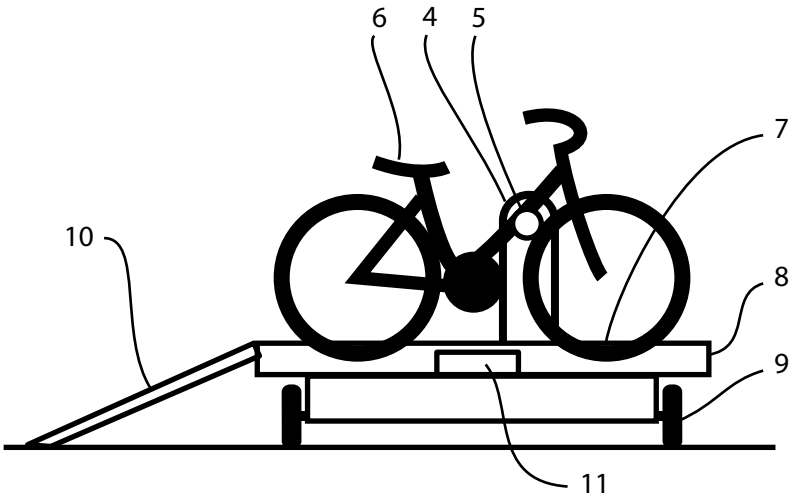
6
4
5
7
10
8
9
11

FIG. 7

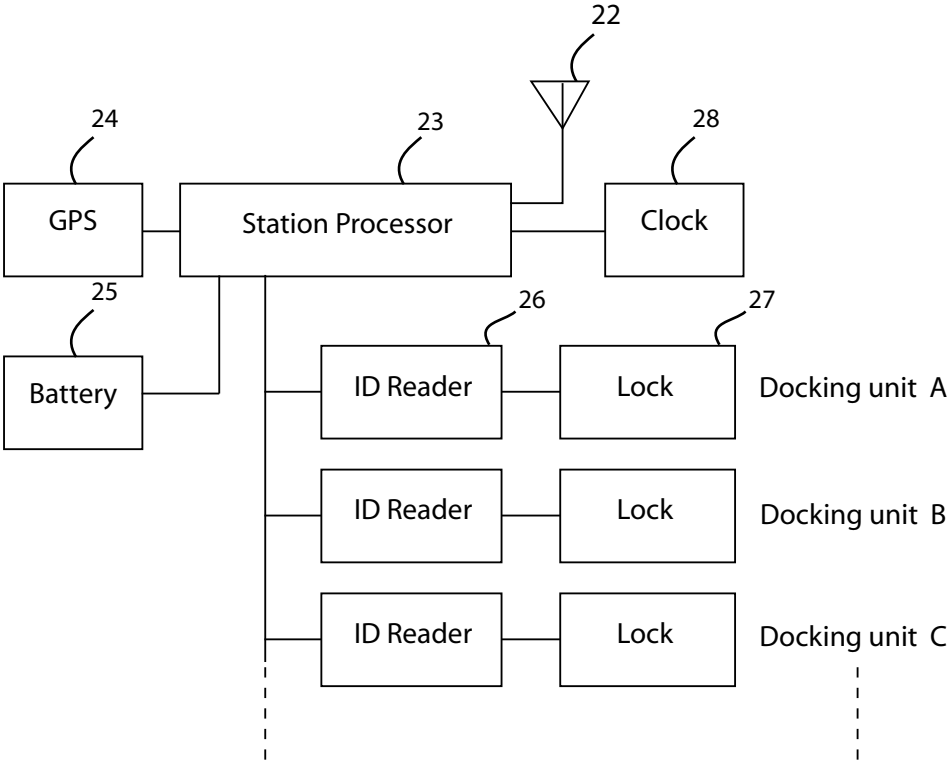
22
24
23
28
GPS
Station Processor
Clock
25
26
27
Battery
ID Reader
Lock
Docking unit A
ID Reader
Lock
Docking unit B
ID Reader
Lock
Docking unit C

FIG. 8

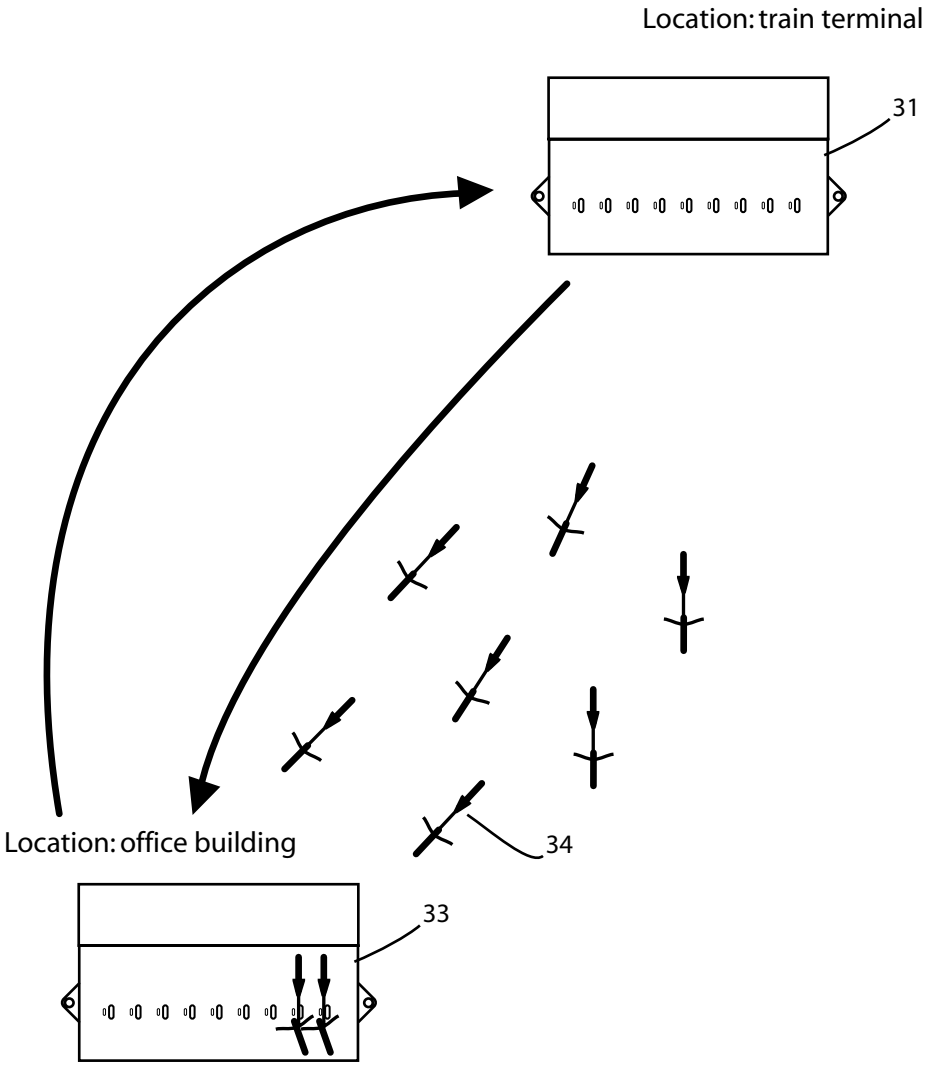


FIG. 9

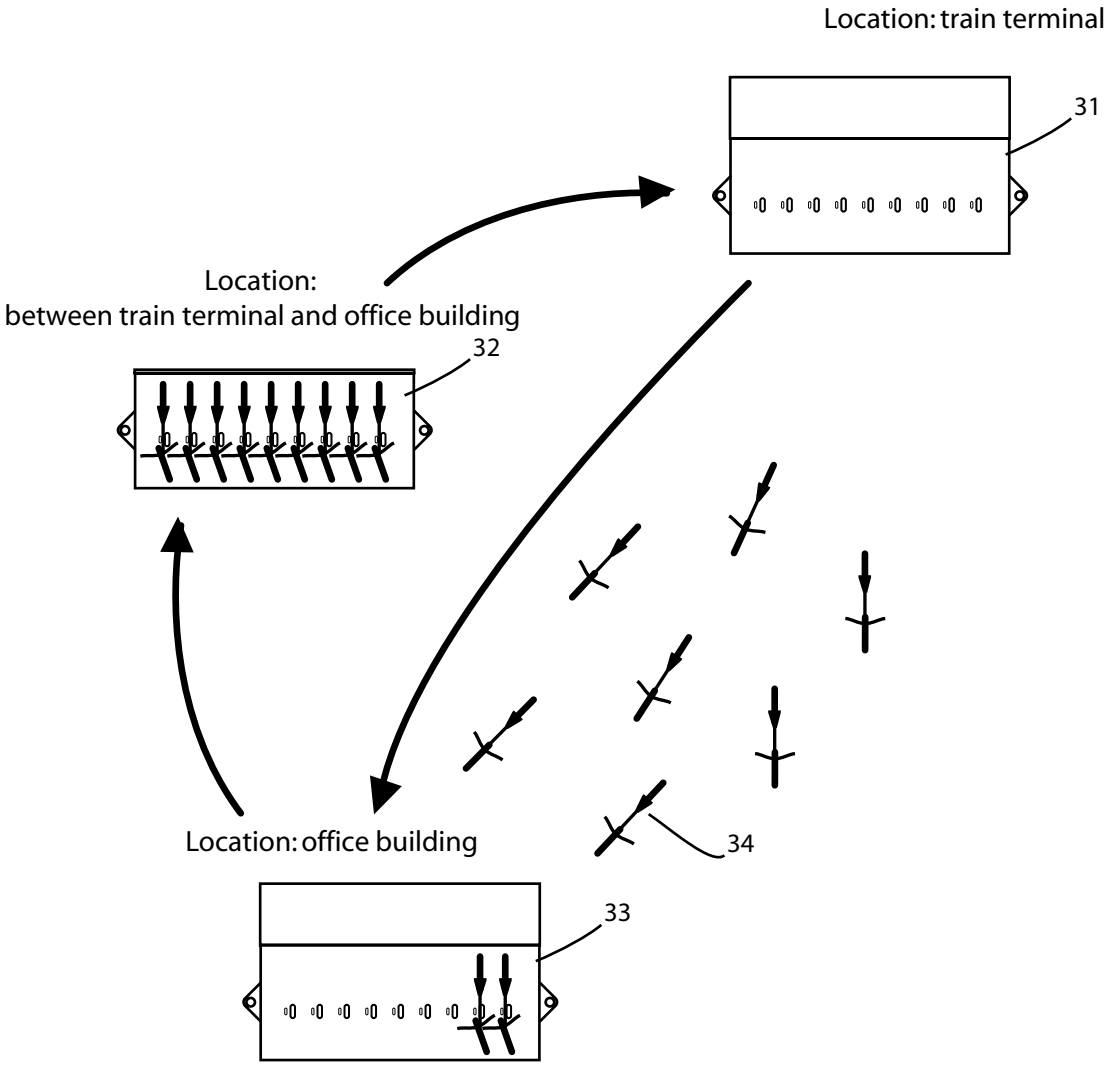
Location: train terminal
31
Location:
between train terminal and office building
32
Location: office building
33
34

FIG. 10

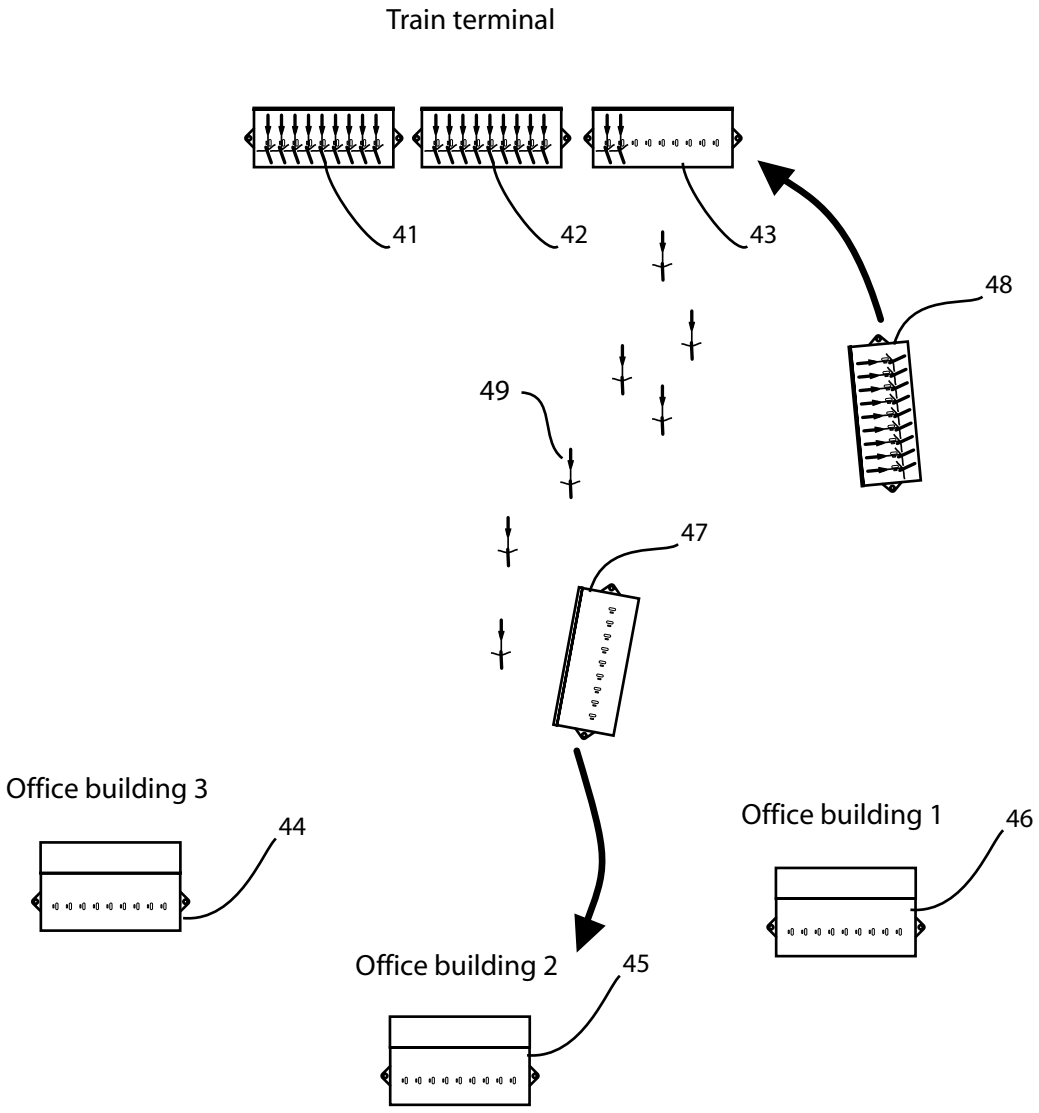
Train terminal
41
42
43
48
49
47
Office building 3
44
Office building 1
46
Office building 2
45

FIG. 11

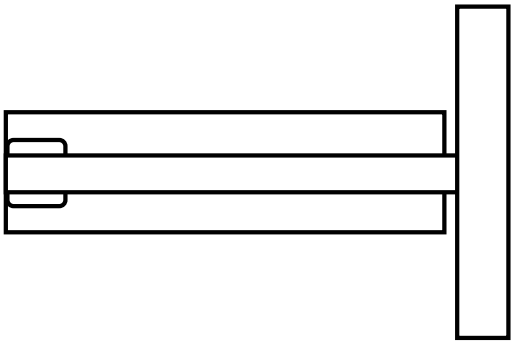

FIG. 12

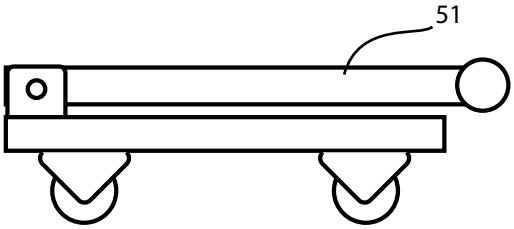


FIG. 13

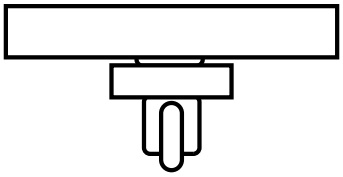

FIG. 14

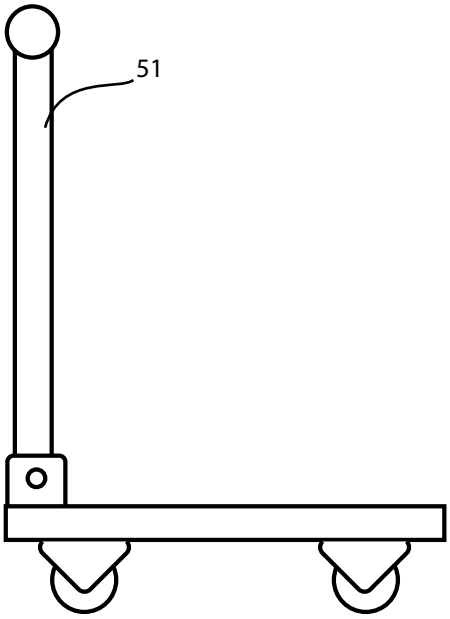


FIG. 15

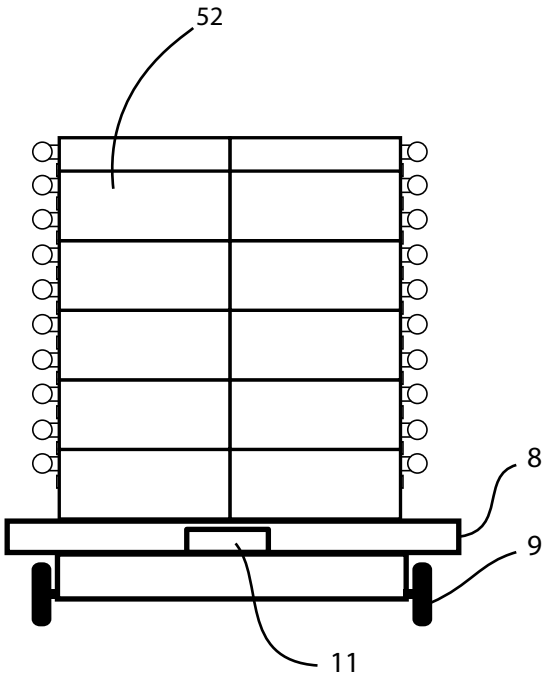


FIG. 16

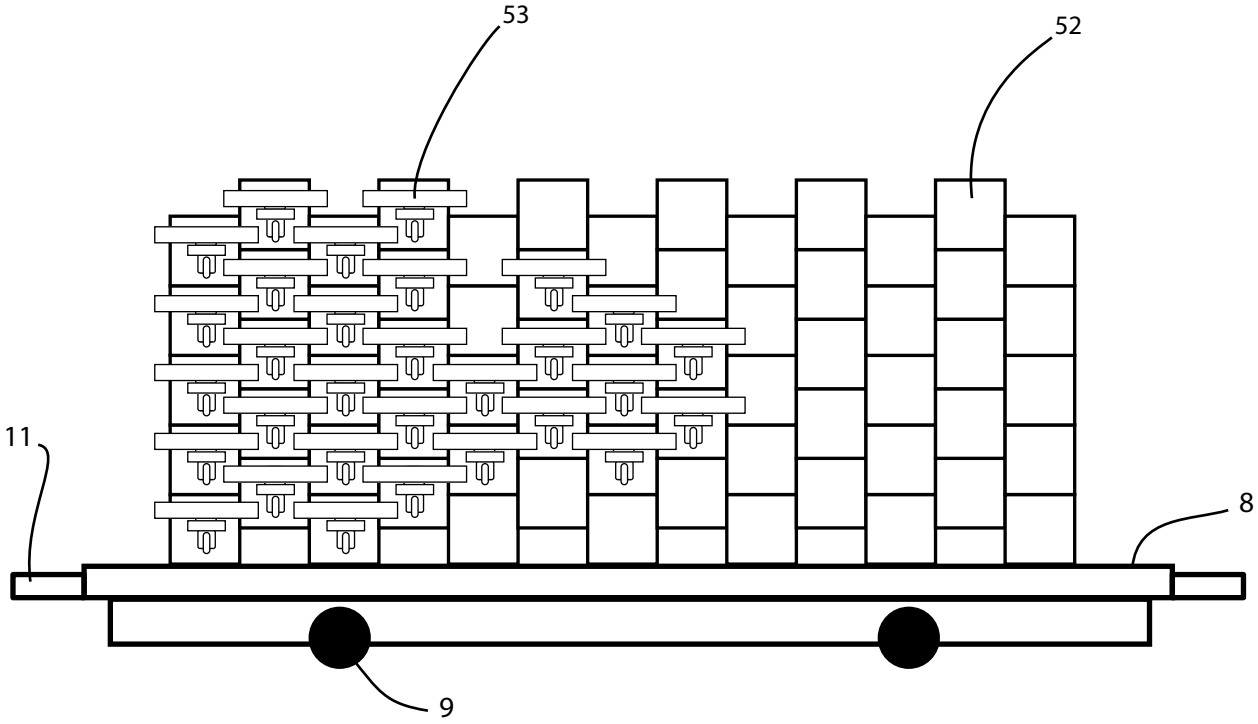


FIG. 17

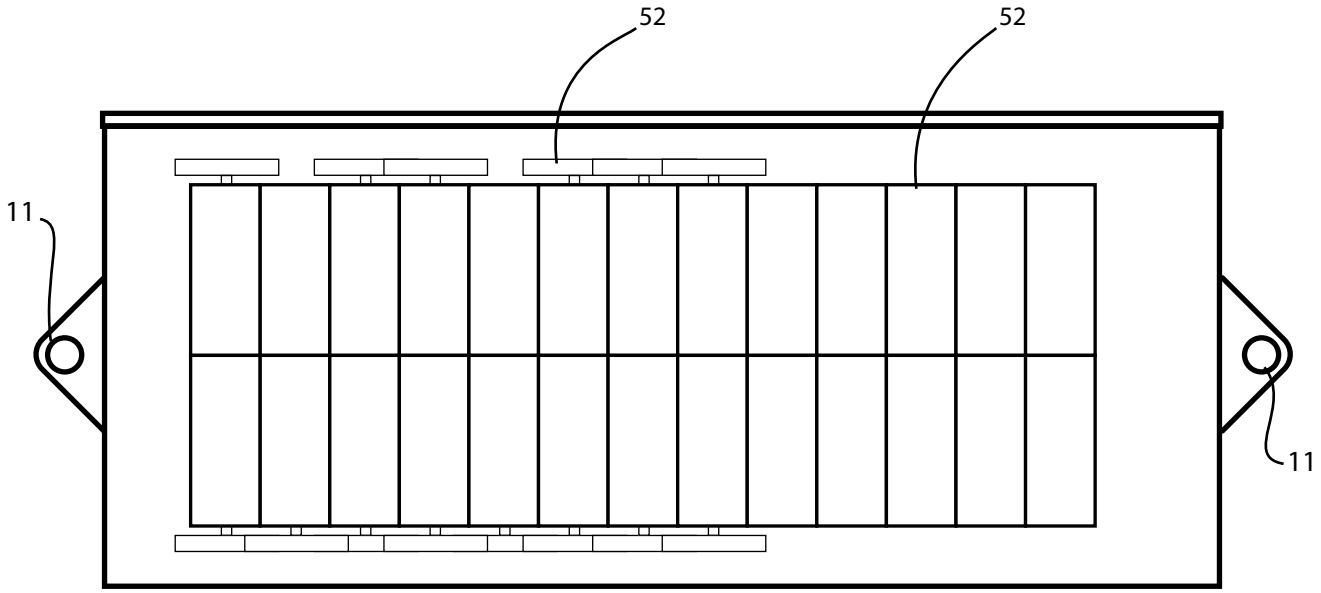


FIG. 18



FIG. 19




FIG. 20