Fig. 1

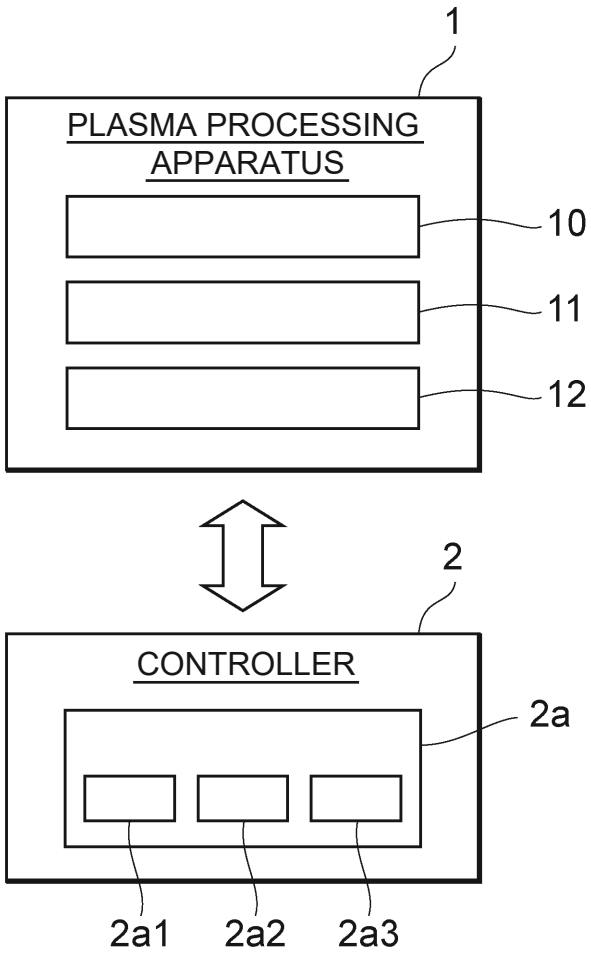
1
PLASMA PROCESSING APPARATUS
10
11
12
2
CONTROLLER
2a
2a1
2a2
2a3

Fig. 2

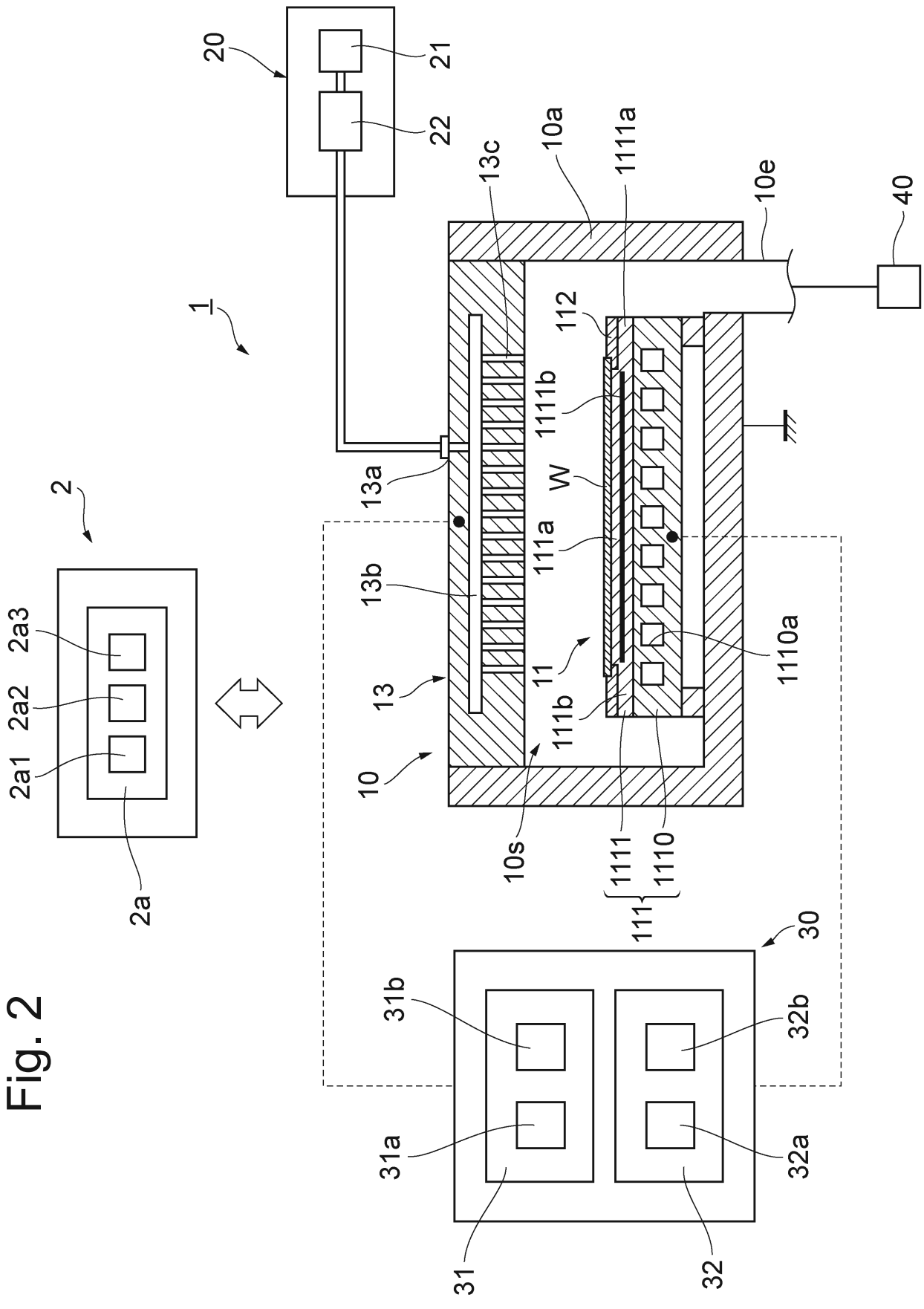
20
21
22
1
2
2a3
2a2
2a1
2a
13c
10a
1111a
10e
40
112
1111b
W
13a
111a
13b
13
11
1110a
10
111b
10s
1111
1110
111
30
31b
32b
31a
32a
31
32

Fig. 3

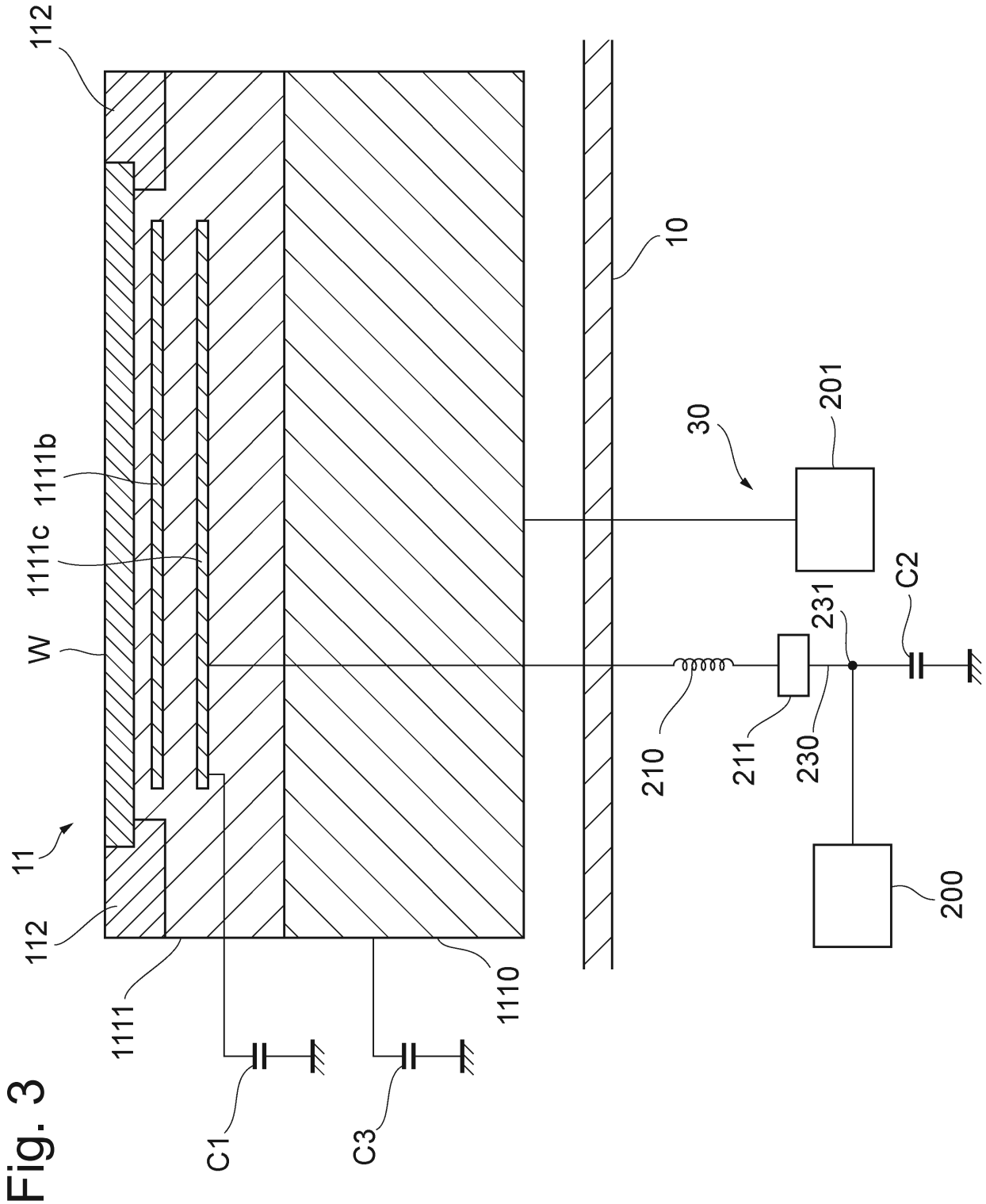
112
1111b
1111c
W
11
112
1111
1110
C1
C3
10
30
201
C2
231
210
211
230
200

Fig. 4

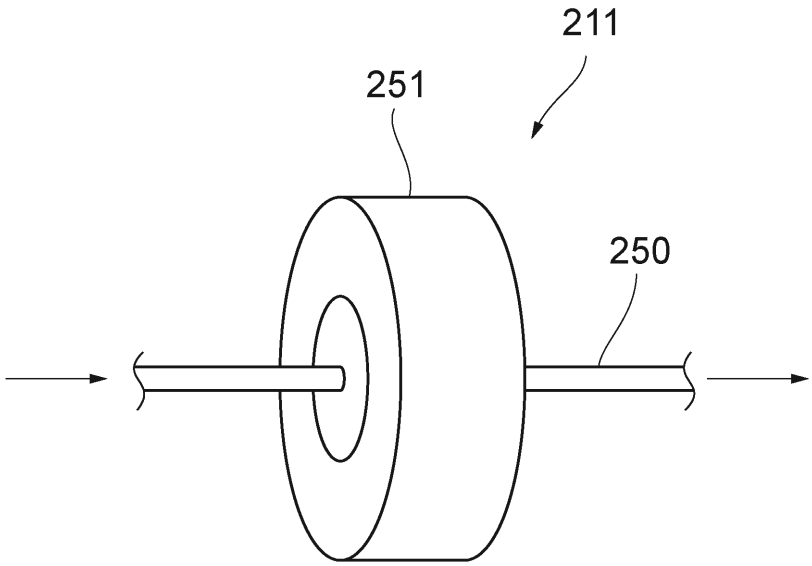

Fig. 5

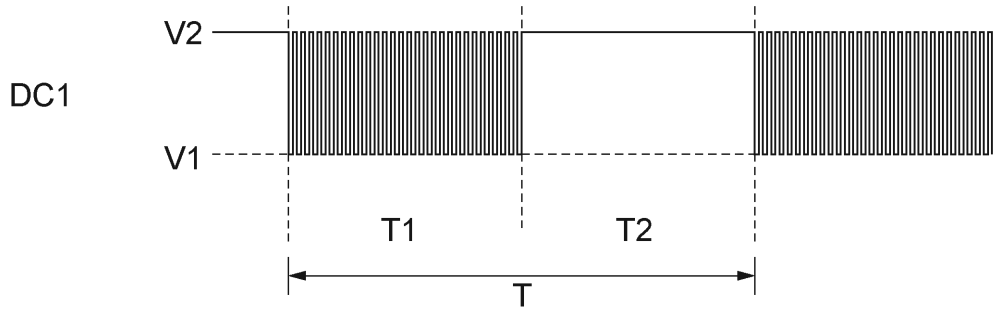

Fig. 6

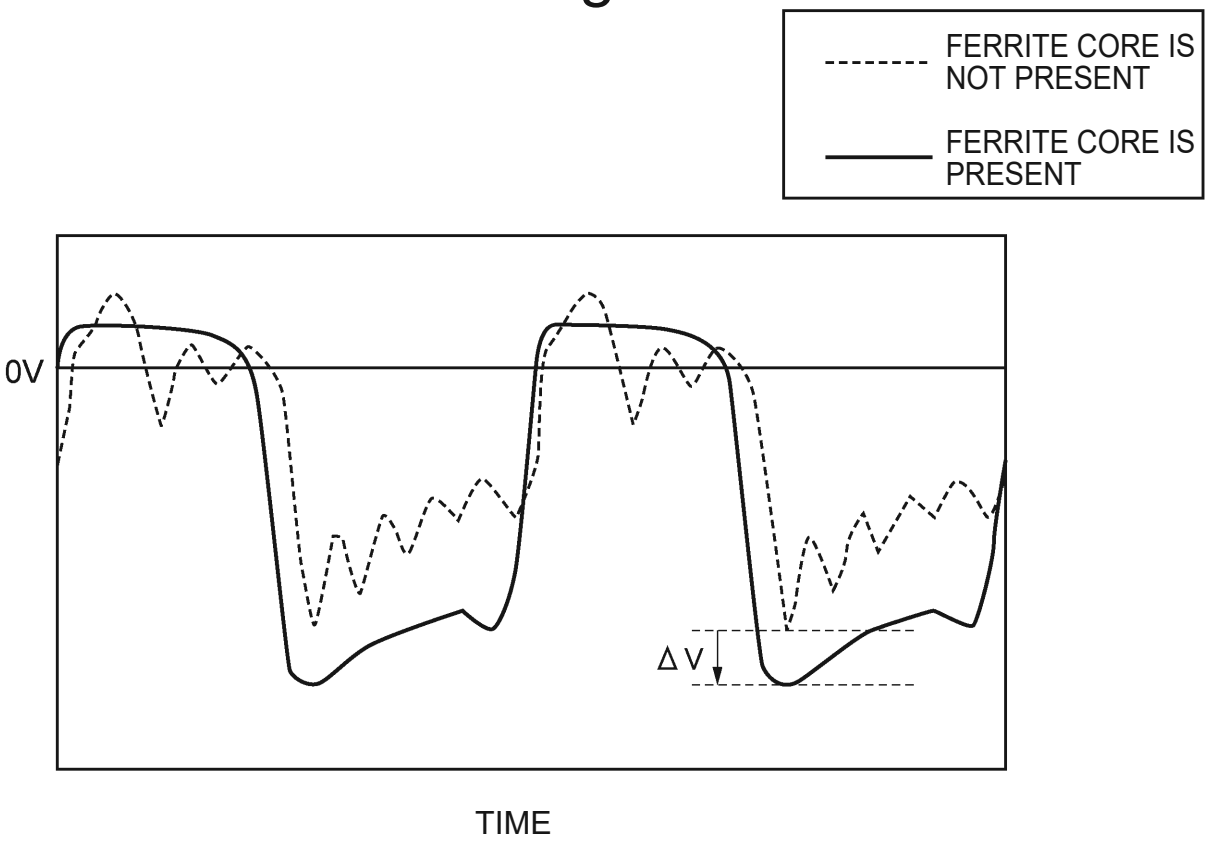
FERRITE CORE IS NOT PRESENT
FERRITE CORE IS PRESENT
0V
ΔV
TIME

Fig. 7

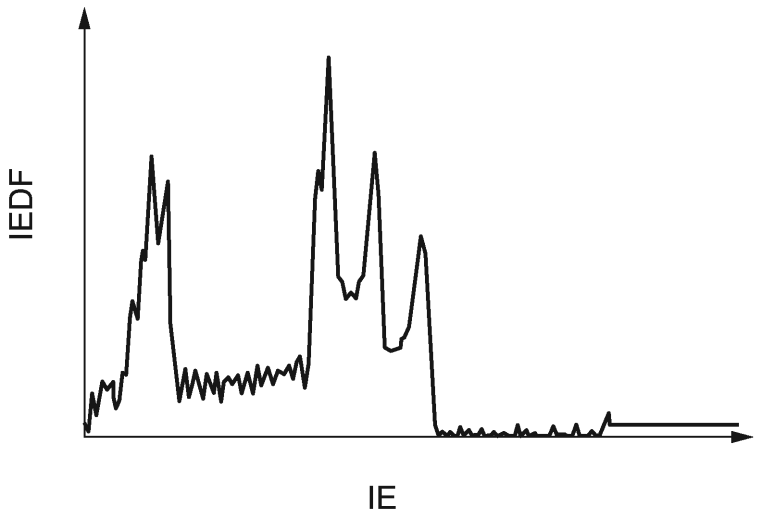
IEDF
IE

Fig. 8

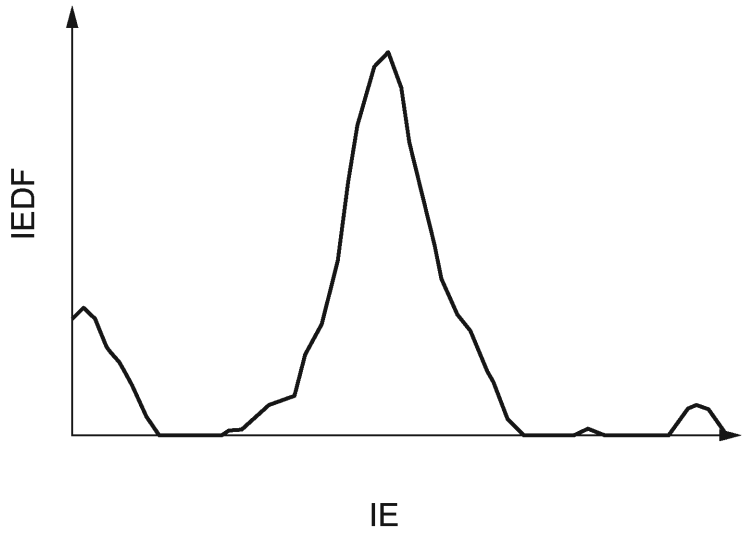
IEDF
IE

Fig. 9

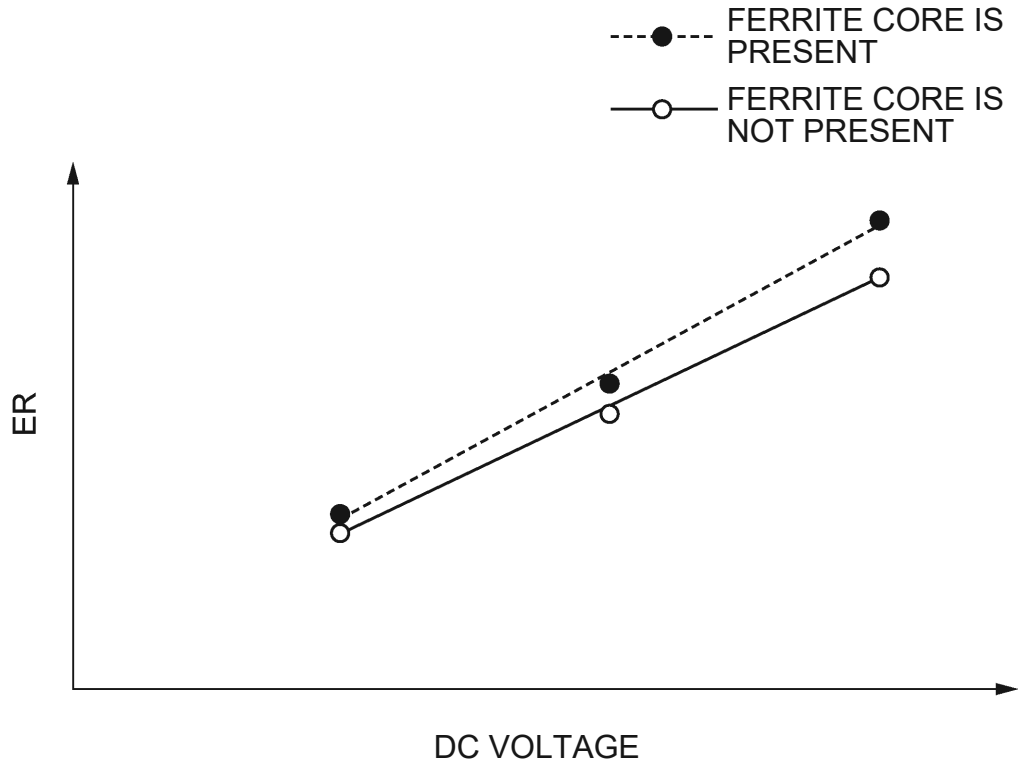
FERRITE CORE IS PRESENT
FERRITE CORE IS NOT PRESENT
ER
DC VOLTAGE

Fig. 10

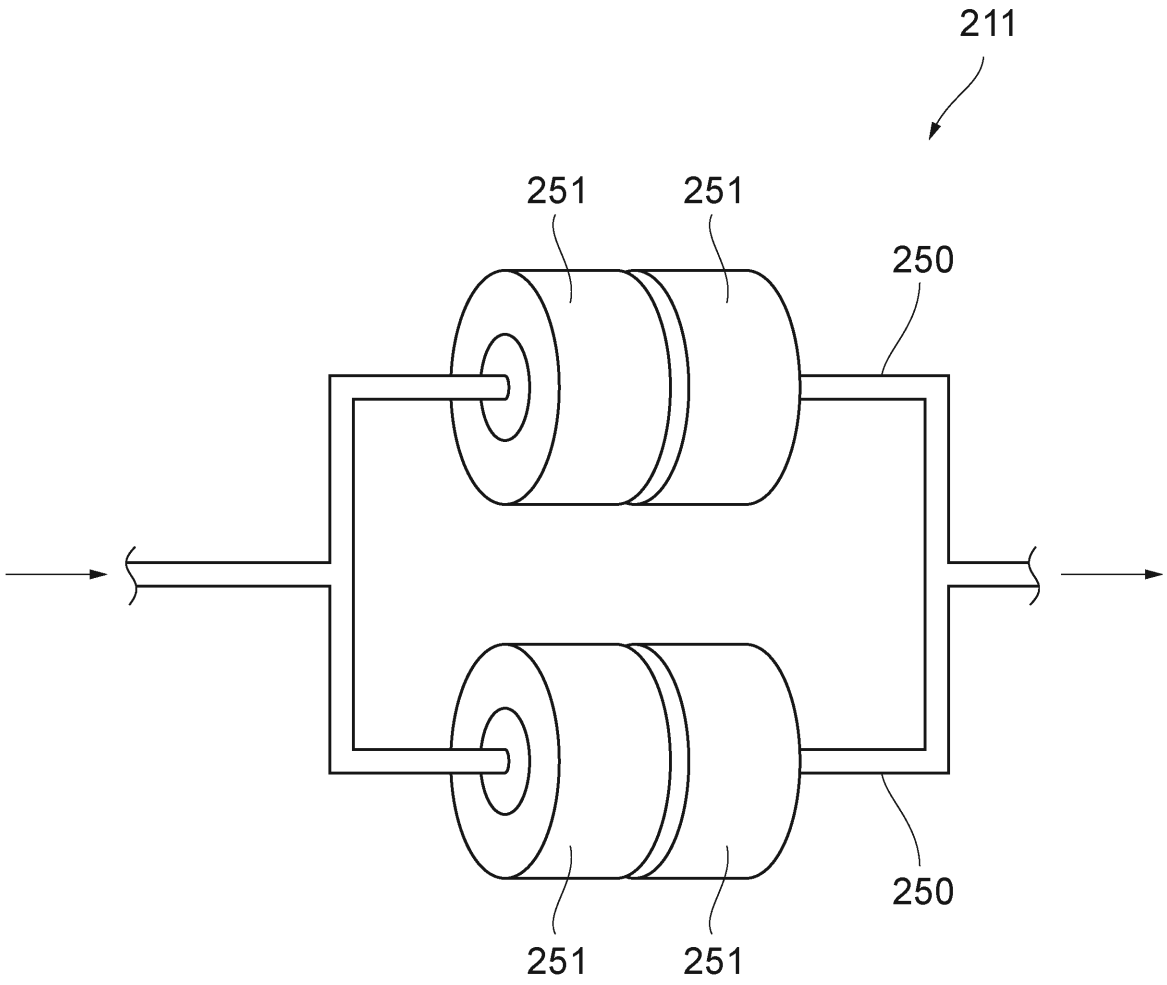

Fig. 11

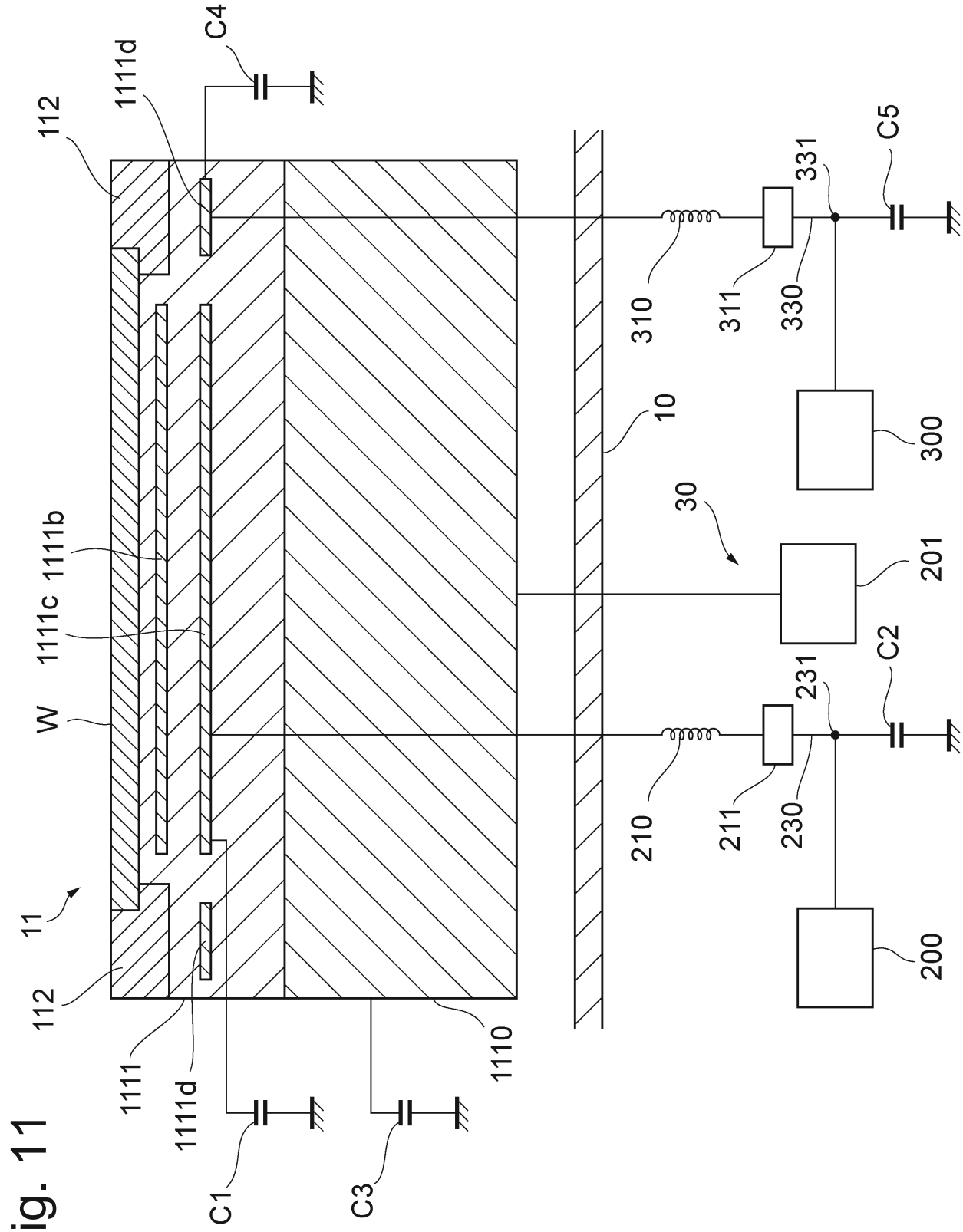
11
112
1111d
C4
112
1111b
1111c
W
1111
1111d
C1
C3
1110
10
310
311
330
331
C5
300
30
201
C2
231
210
211
230
200

Fig. 12

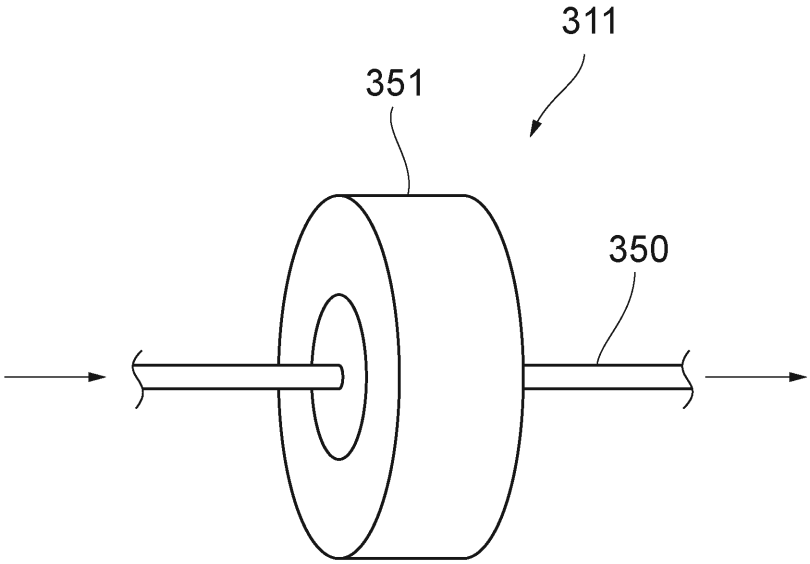

Fig. 13

