PCT

WORLD INTELLECTUAL PROPERTY ORGANIZATION
International Bureau

RTMP COPY + IPER

INTERNATIONAL APPLICATION PUBLISHED UNDER THE PATENT COOPERATION TREATY (PCT)

(51) International Patent Classification 6 :
A61K 9/00, A61F 5/41, A61M 31/00

A1

(11) International Publication Number: WO 96/28142

(43) International Publication Date: 19 September 1996 (19.09.96)

(21) International Application Number: PCT/US96/03086

(22) International Filing Date: 7 March 1996 (07.03.96)

(30) Priority Data:
08/403,333 14 March 1995 (14.03.95) US

(71) Applicant: VIVUS, INCORPORATED [US/US]; Suite 200, 545 Middlefield Road, Menlo Park, CA 94025 (US).

(72) Inventor: PLACE, Virgil, A.; 10 Ala Kahua, P.O. Box 44555, Kawaihae, HI 96743 (US).

(74) Agents: REED, Dianne, E. et al.; Reed & Robins, Suite 200, 285 Hamilton Avenue, Palo Alto, CA 94301 (US).

(81) Designated States: AL, AM, AT, AU, AZ, BB, BG, BR, BY, CA, CH, CN, CZ, DE, DK, EE, ES, FI, GB, GE, HU, IS, JP, KE, KG, KP, KR, KZ, LK, LR, LS, LT, LU, LV, MD, MG, MK, MN, MW, MX, NO, NZ, PL, PT, RO, RU, SD, SE, SG, SI, SK, TJ, TM, TR, TT, UA, UG, UZ, VN, ARIPO patent (KE, LS, MW, SD, SZ, UG), Eurasian patent (AM, AZ, BY, KG, KZ, MD, RU, TJ, TM), European patent (AT, BE, CH, DE, DK, ES, FI, FR, GB, GR, IE, IT, LU, MC, NL, PT, SE), OAPI patent (BF, BJ, CF, CG, CI, CM, GA, GN, ML, MR, NE, SN, TD, TG).

Published
With international search report.
Before the expiration of the time limit for amending the claims and to be republished in the event of the receipt of amendments.

(54) Title: METHOD AND KIT FOR PREVENTING ERECTILE DYSFUNCTION

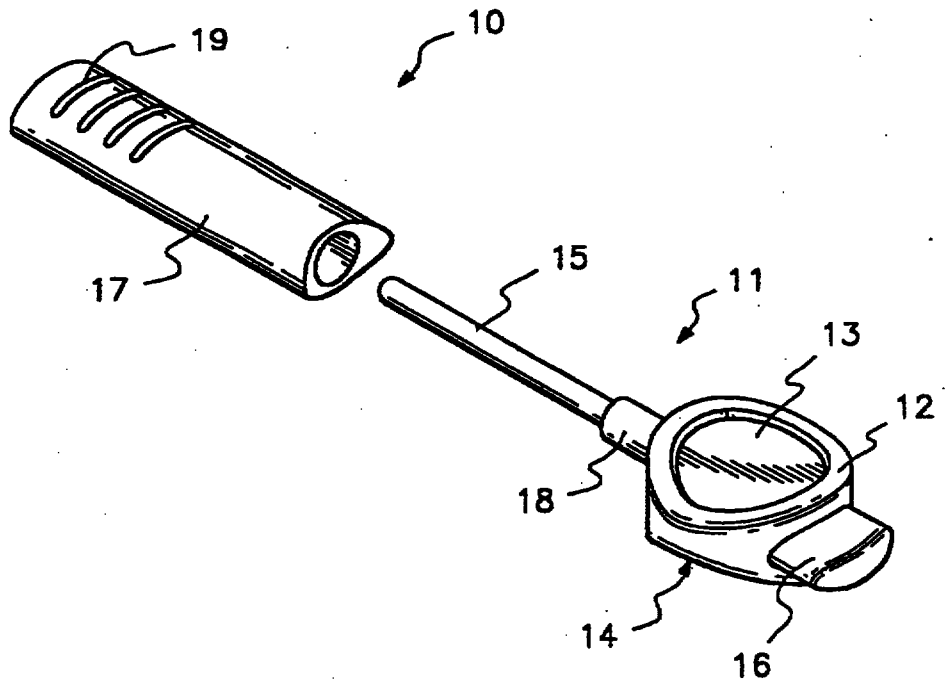

(57) Abstract

A method is provided for preventing erectile dysfunction, particularly vasculogenic impotence, in a male individual. The method involves periodic administration of a vasoactive agent throughout a 24-hour period. The agent and dosage regimen are selected such that regularly increased blood flow to the penis is achieved, in turn preventing arterial occlusion and vascular deterioration of the muscular fibers of the vessels and collagen fibers of the cavernosal tissue.