Fig.1

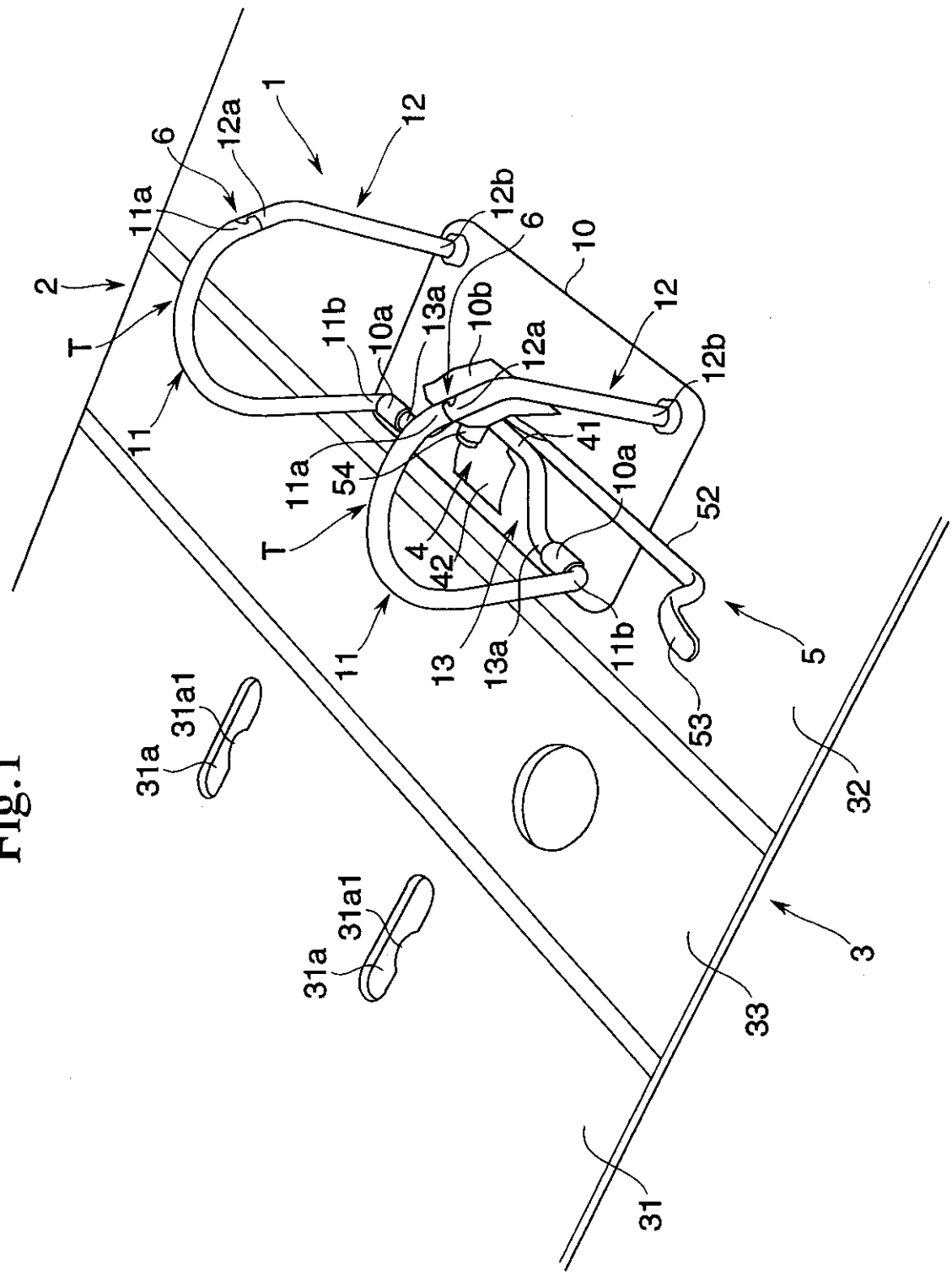
1
2
3
4
5
6
10
10a
10b
11
11a
11b
12
12a
12b
13
13a
31
31a
31a1
32
33
41
42
52
53
54
T

Fig.2

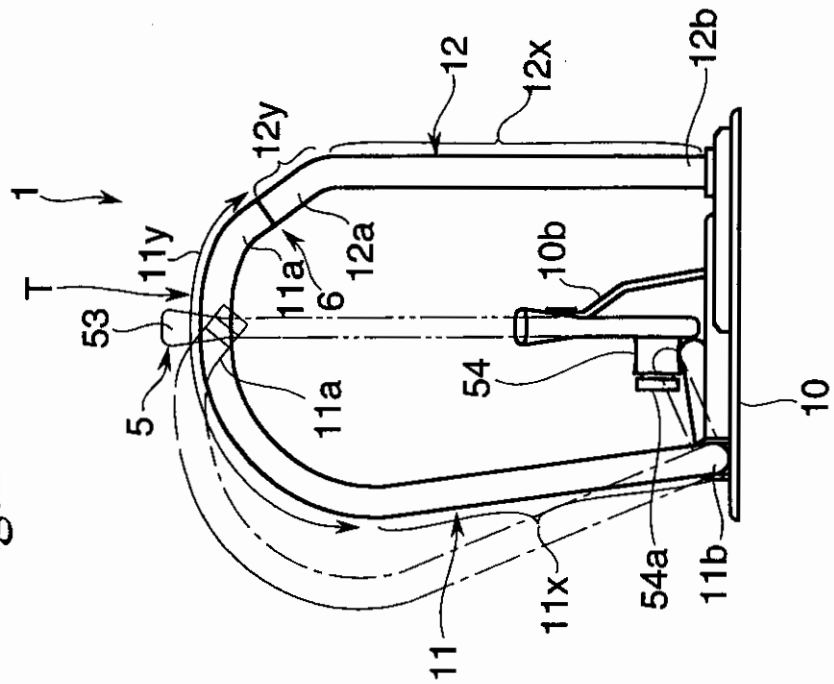

Fig.3

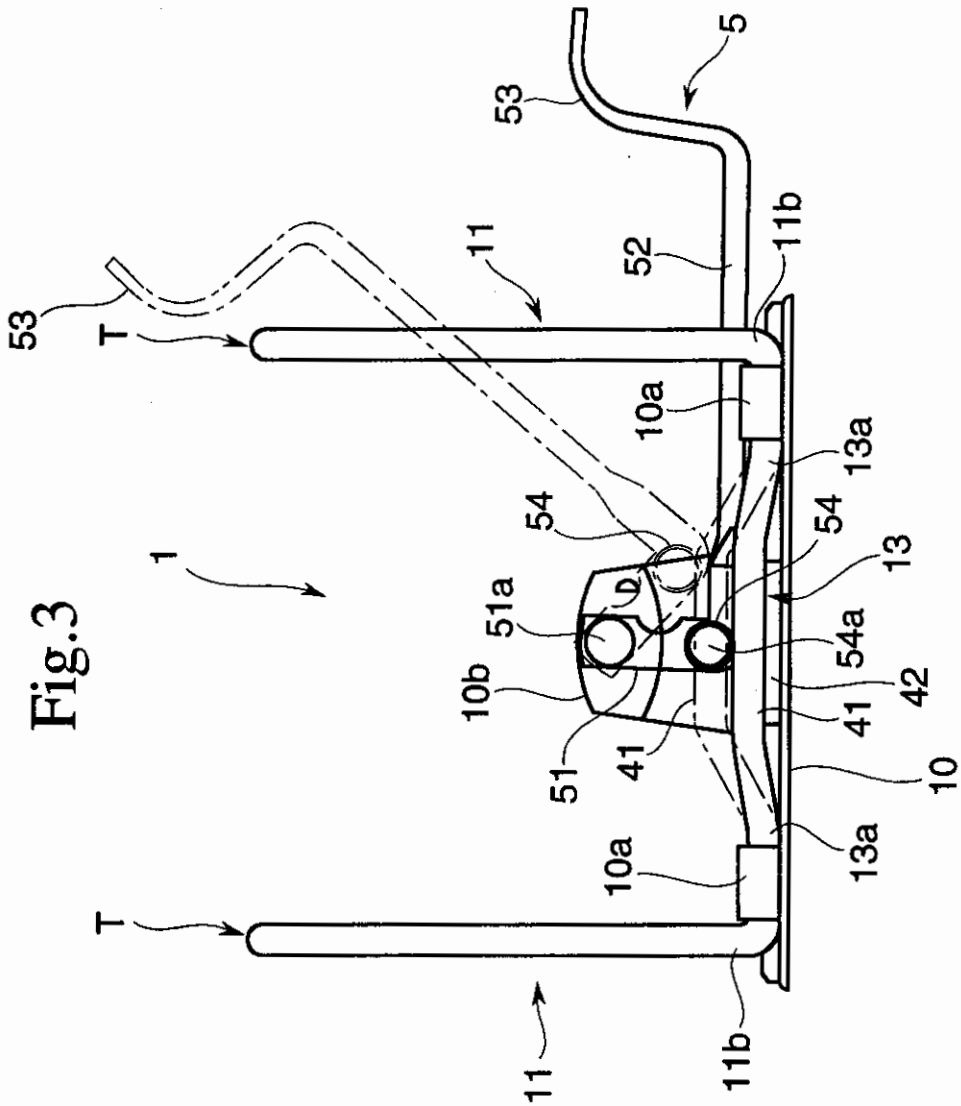
1
5
53
53
T
T
11
11
11b
11b
52
10a
10a
13a
13a
54
54
13
51a
54a
10b
42
41
41
51
10
D

Fig.4

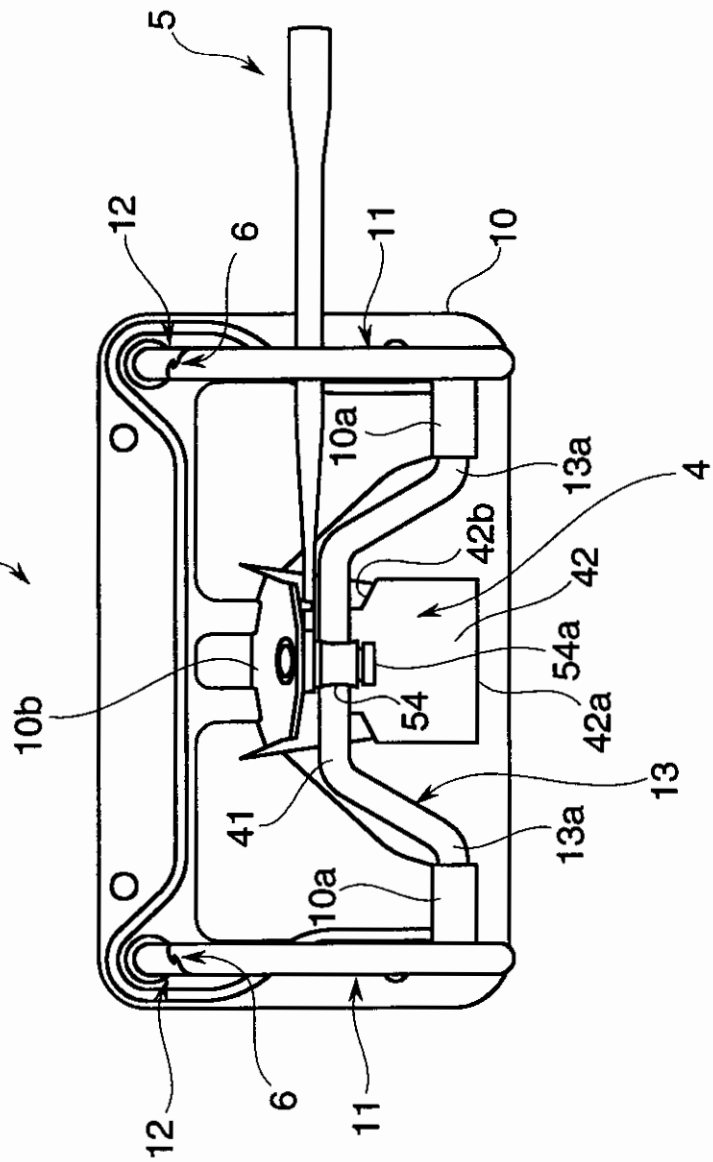

Fig.5

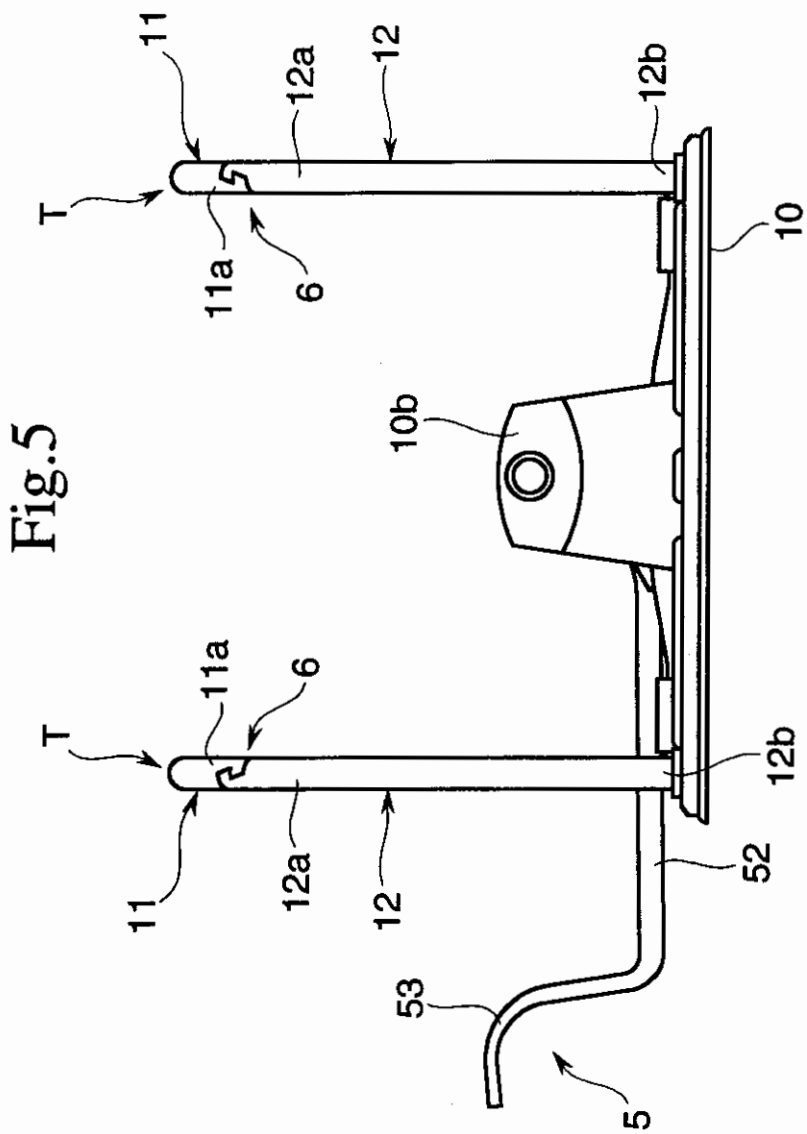

Fig.6

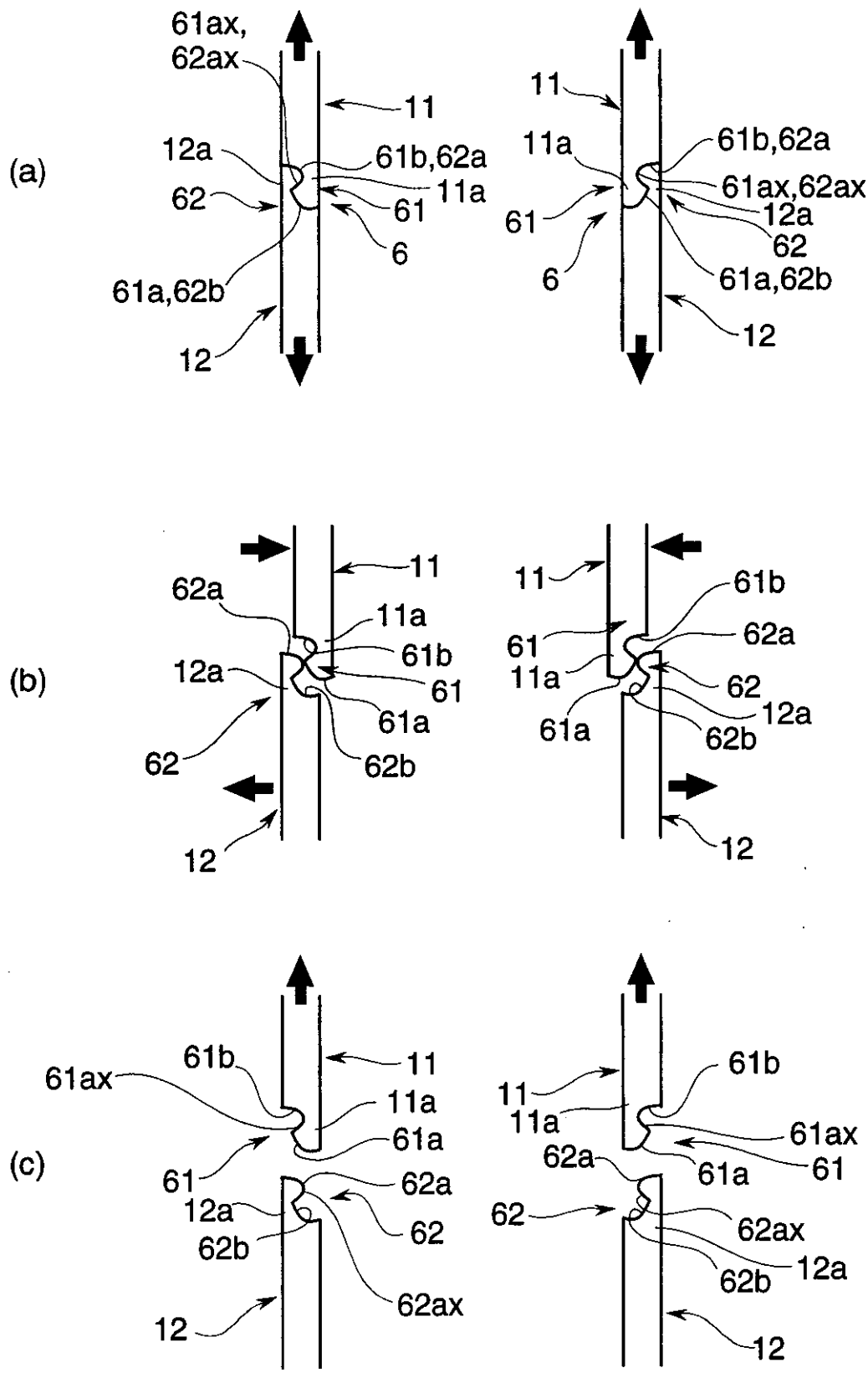
(a)
61ax,
62ax
11
12a
61b,62a
62
11a
61
6
61a,62b
12
11
11a
61b,62a
61ax,62ax
12a
61
62
6
61a,62b
12
(b)
11
62a
11a
61b
12a
61
61a
62
62b
12
11
61b
61
62a
11a
62
12a
61a
62b
12
(c)
61ax
61b
11
11a
61a
61
62a
12a
62
62b
62ax
12
11
61b
11a
61ax
62a
61a
61
62
62ax
62b
12a
12

Fig.7

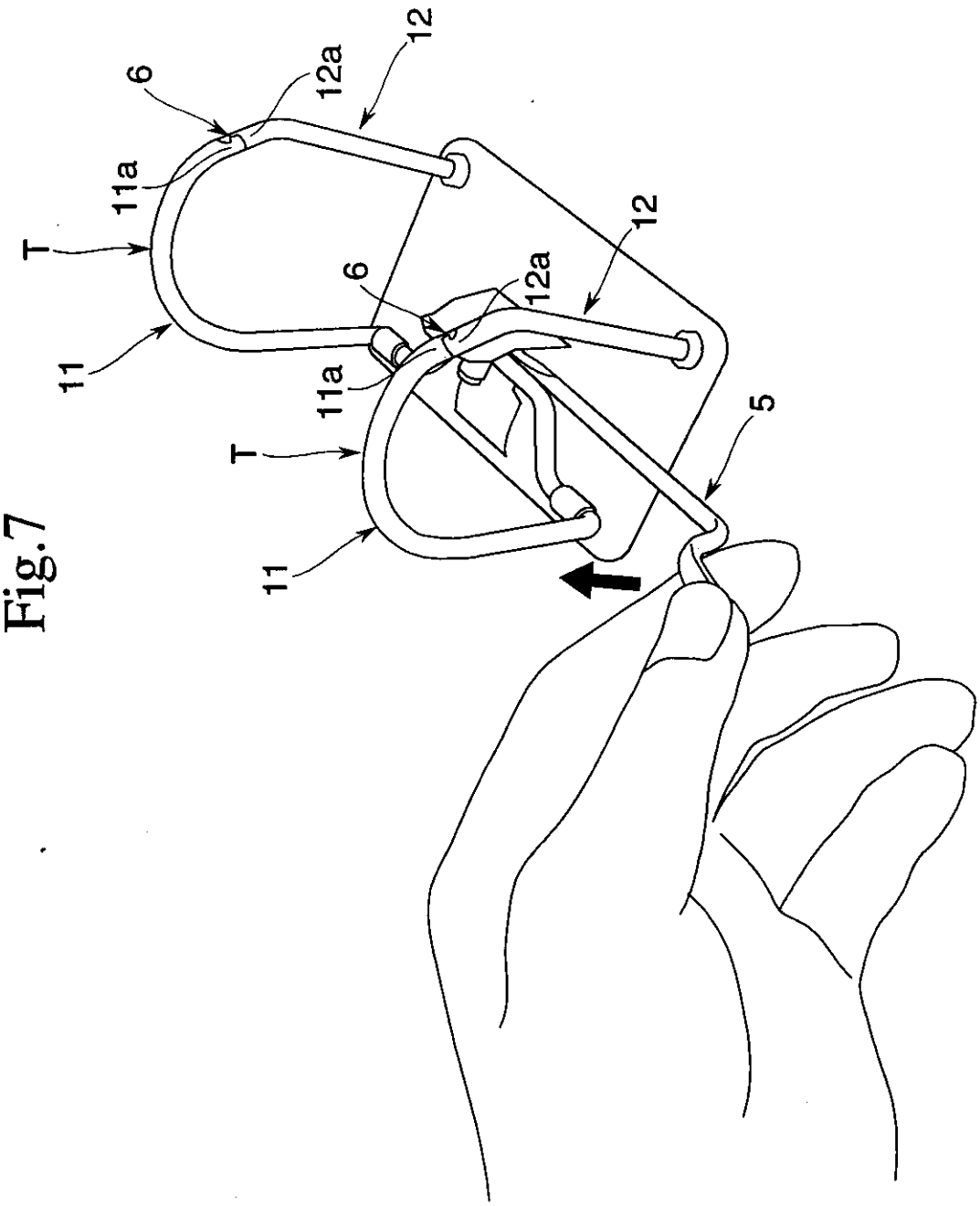

Fig.8

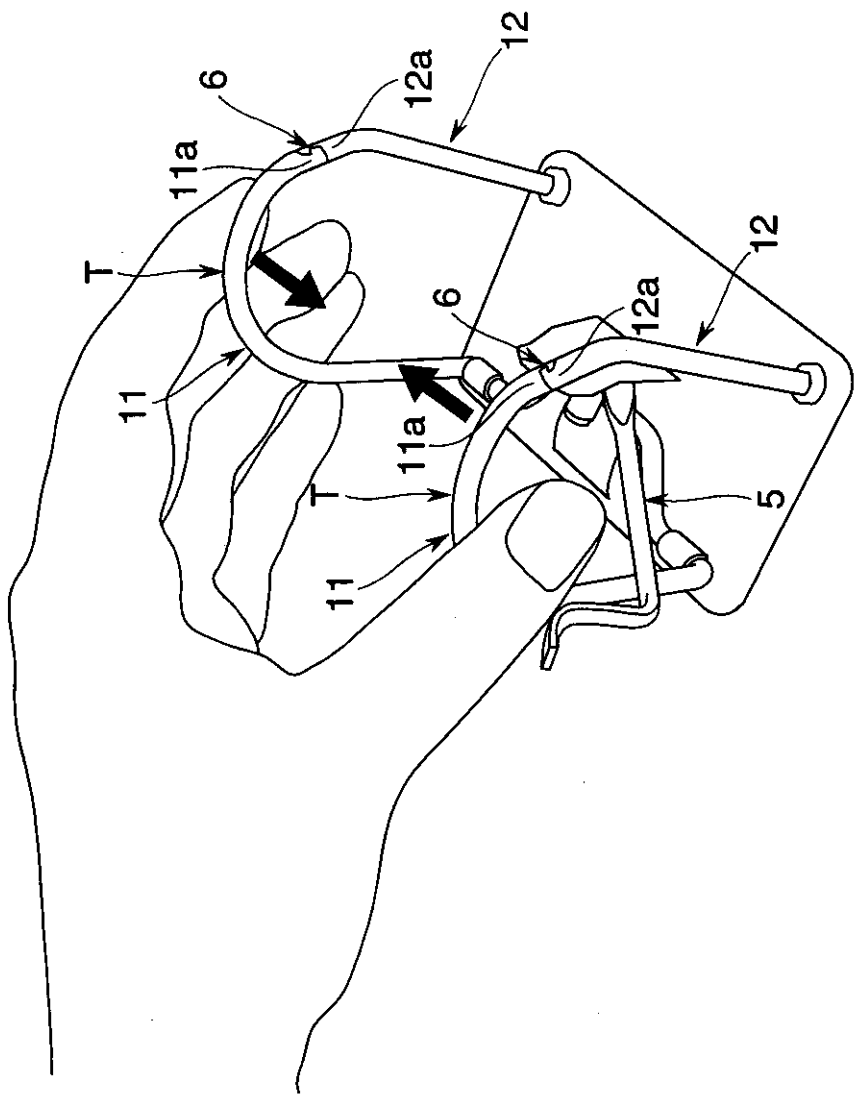

Fig.9

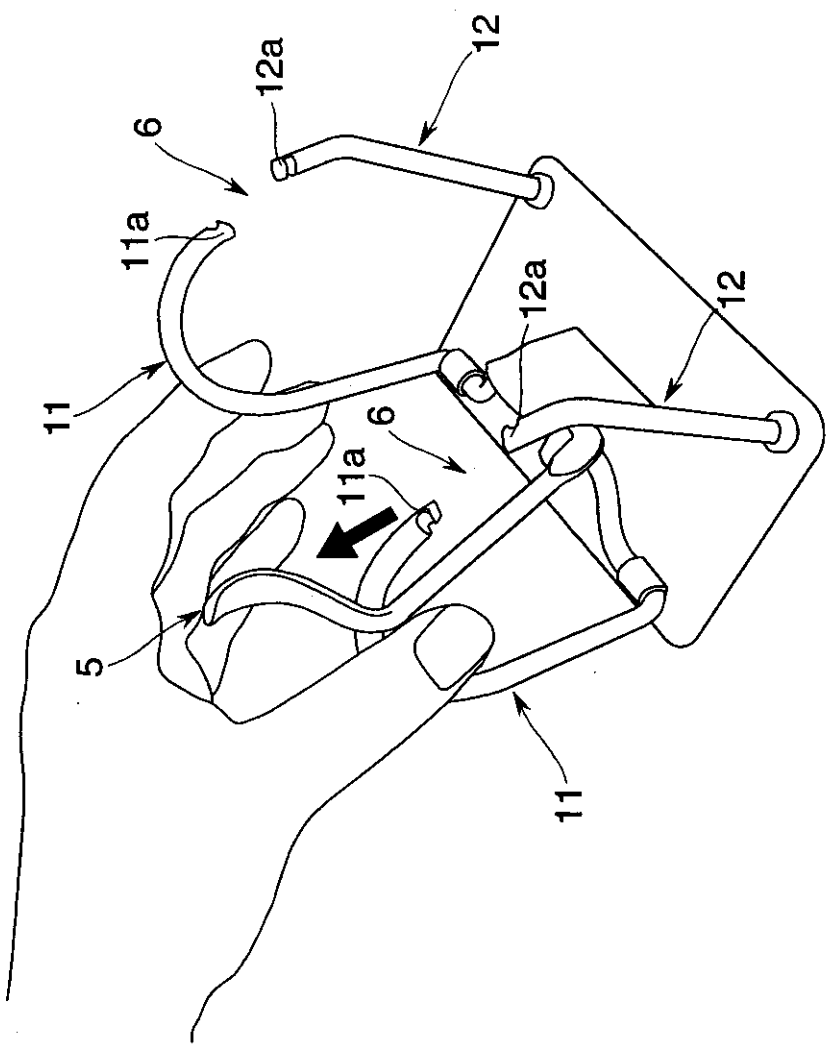

Fig.10

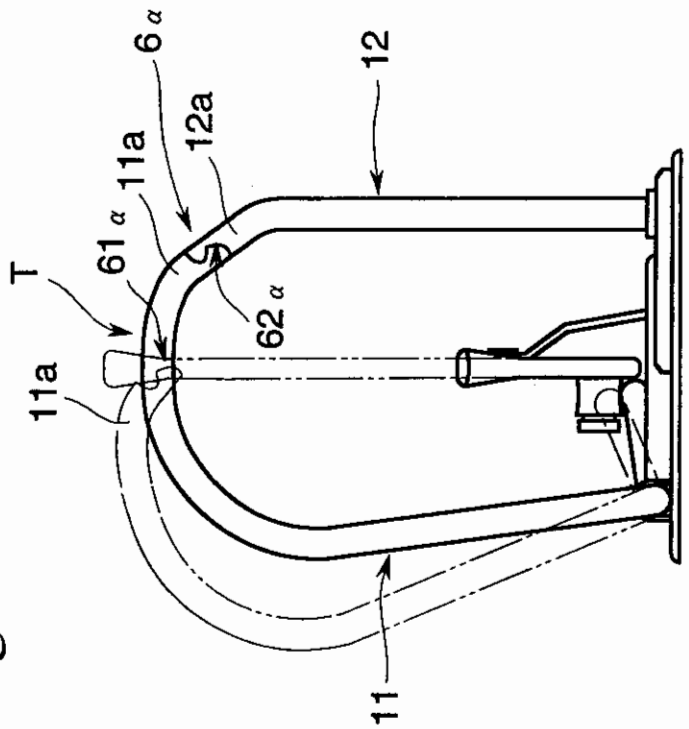

Fig.11

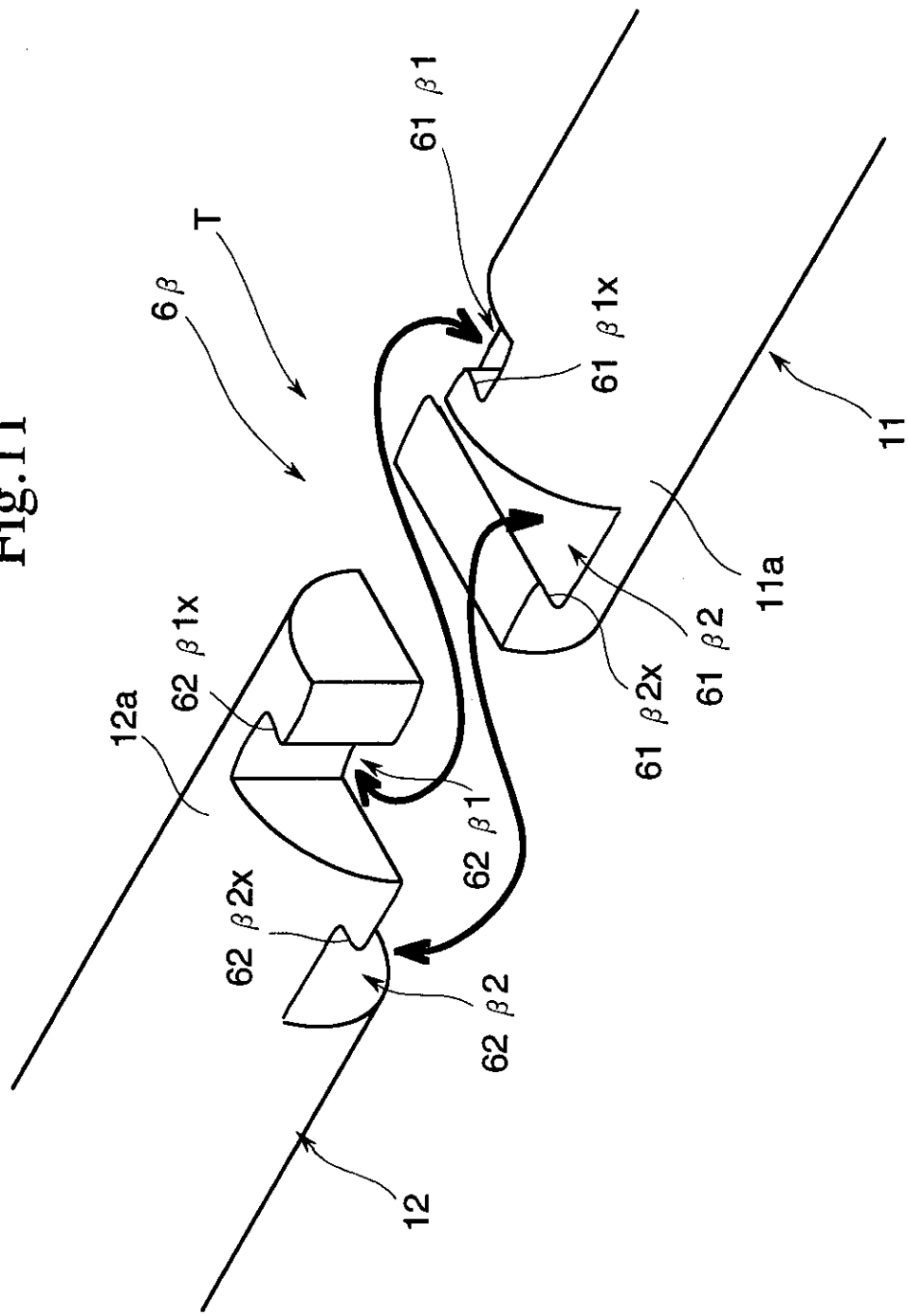

Fig.12

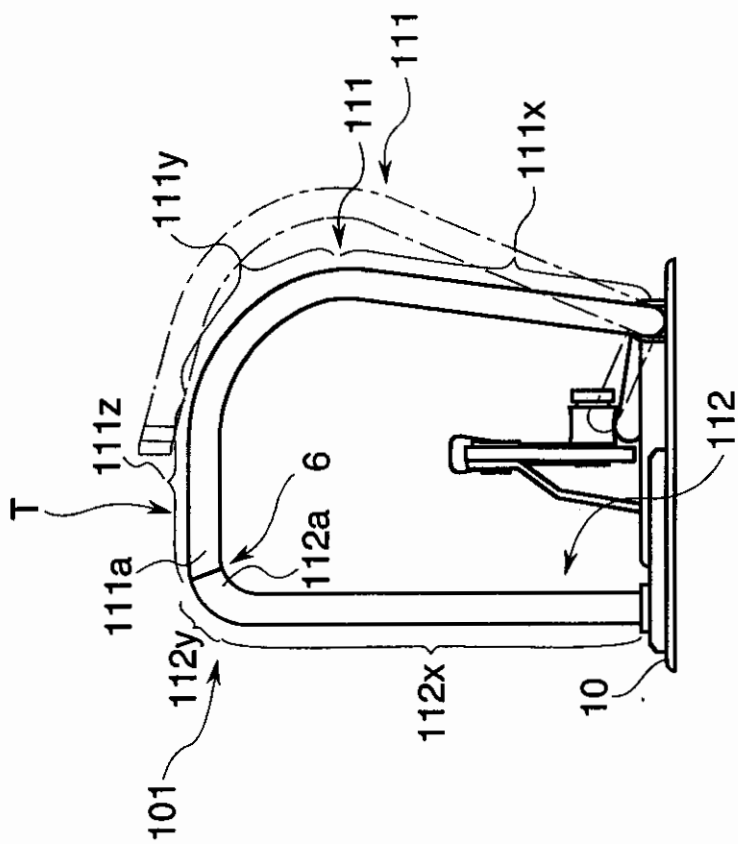

Fig.13

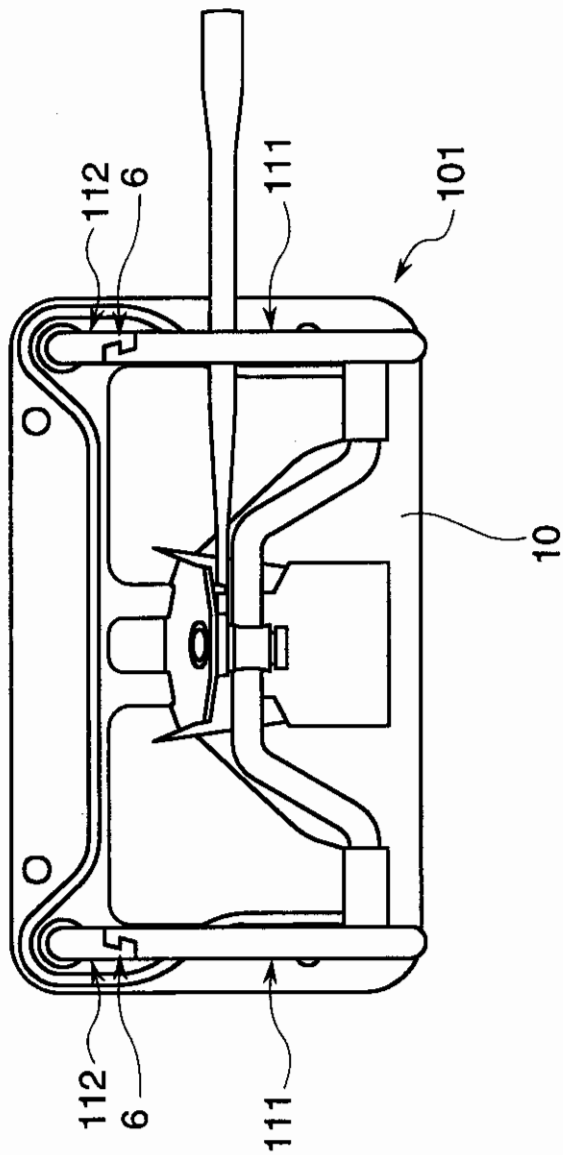

Fig.14

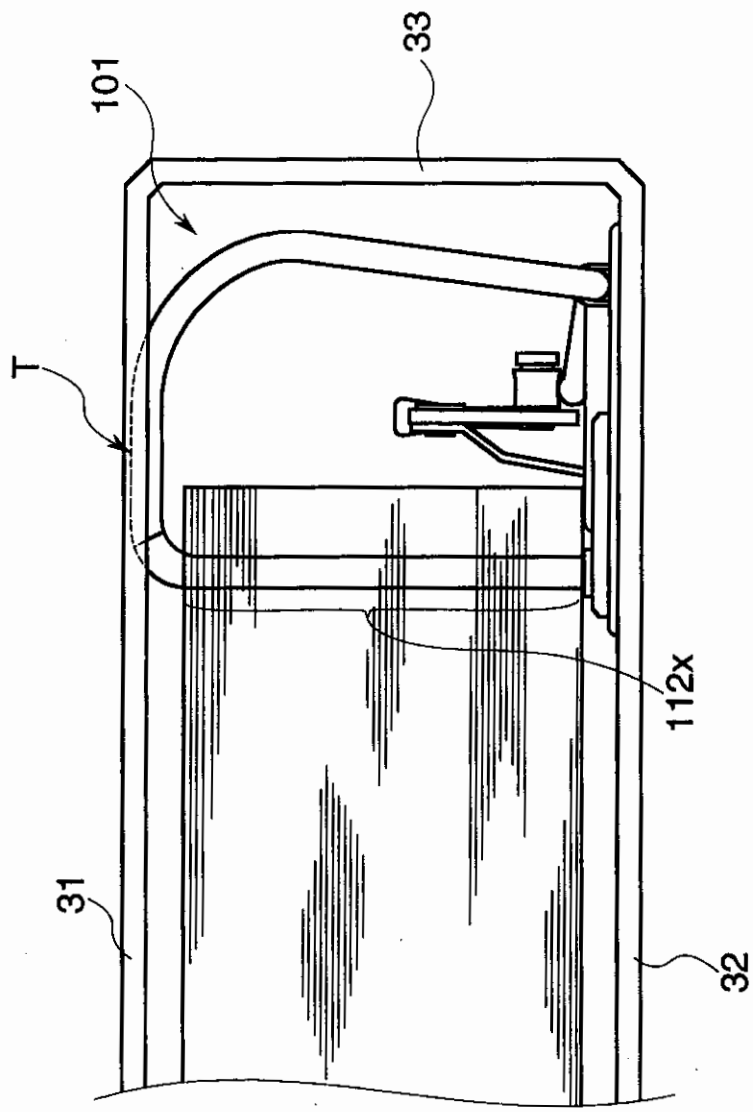

Fig.15

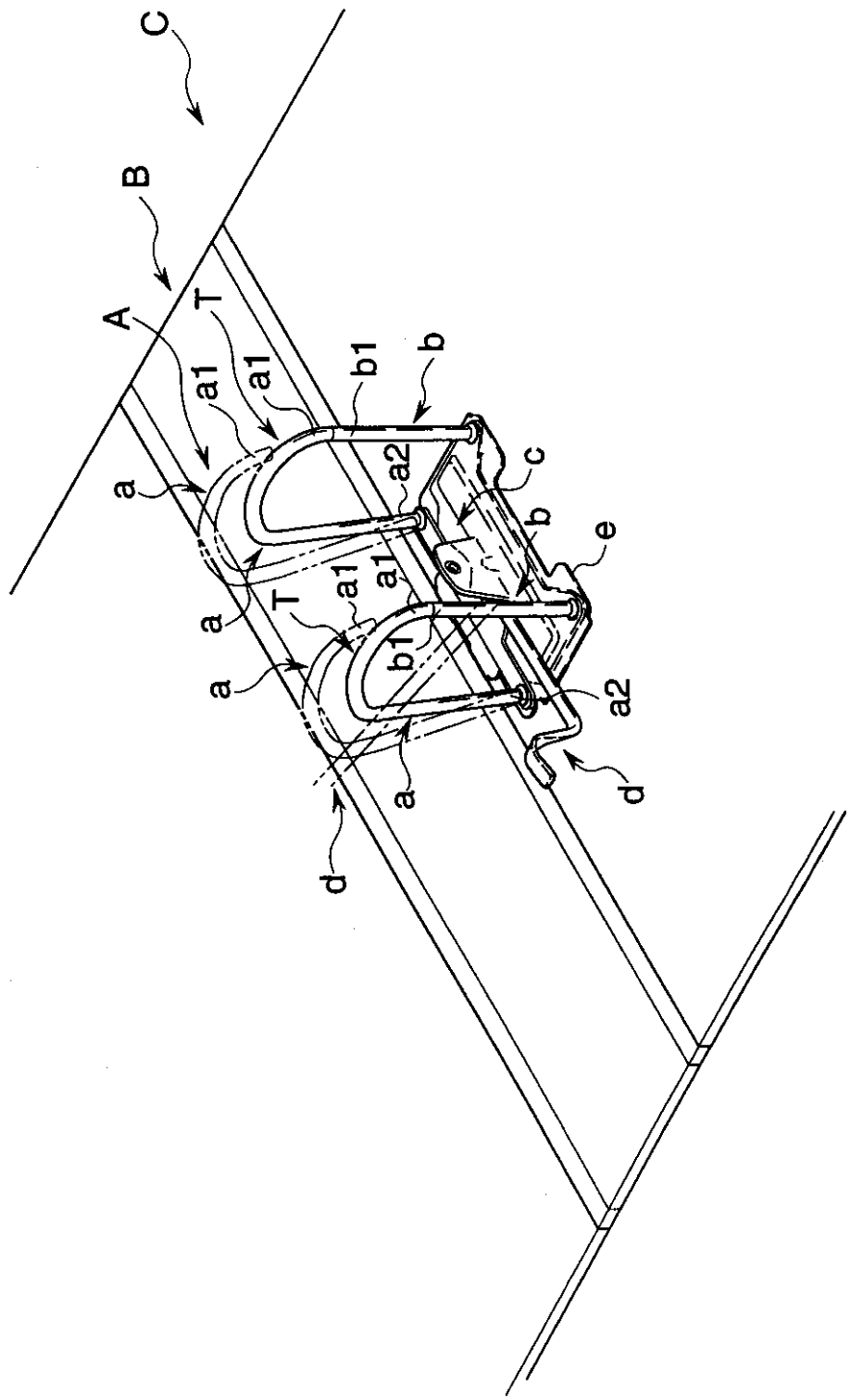

Fig.16

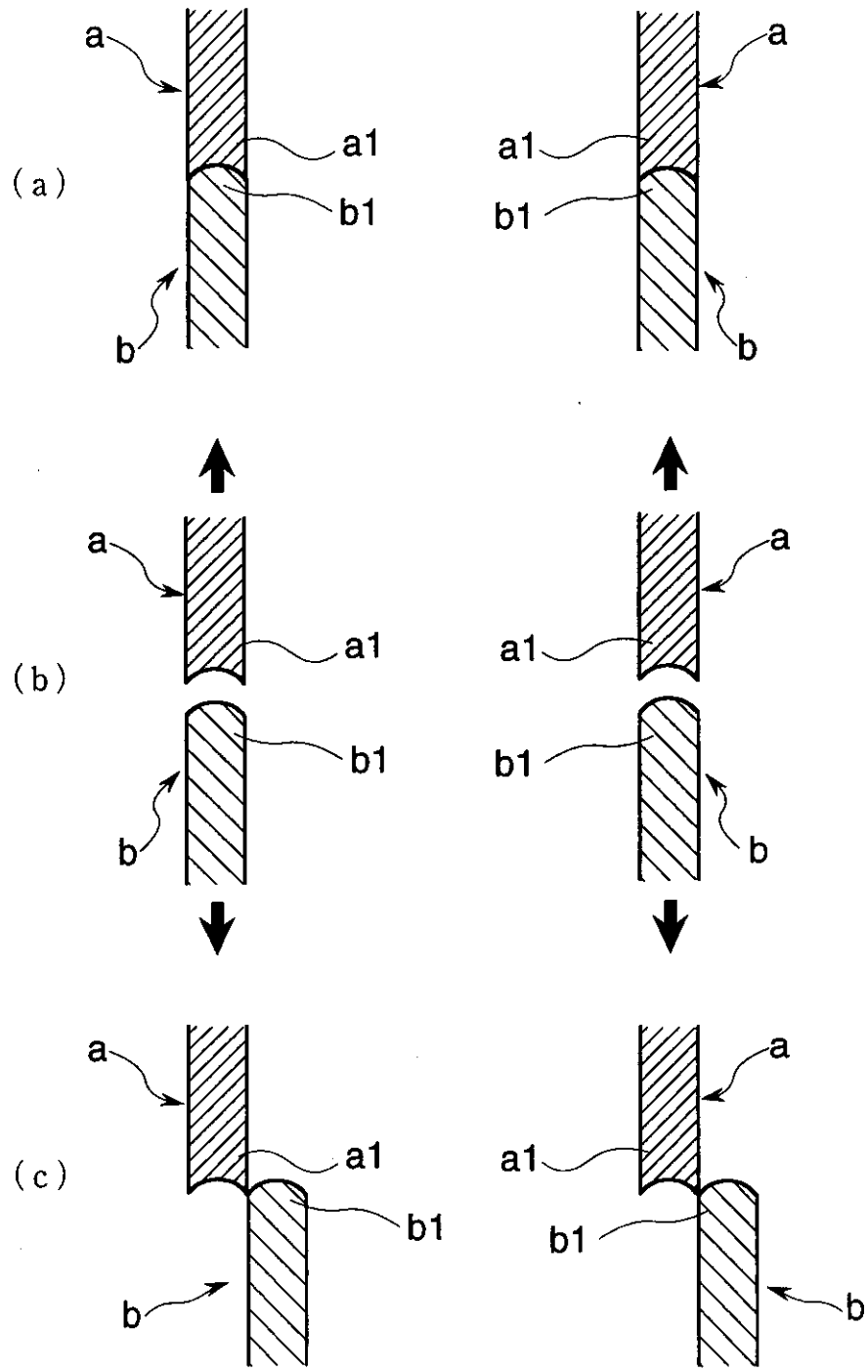

Fig.17

