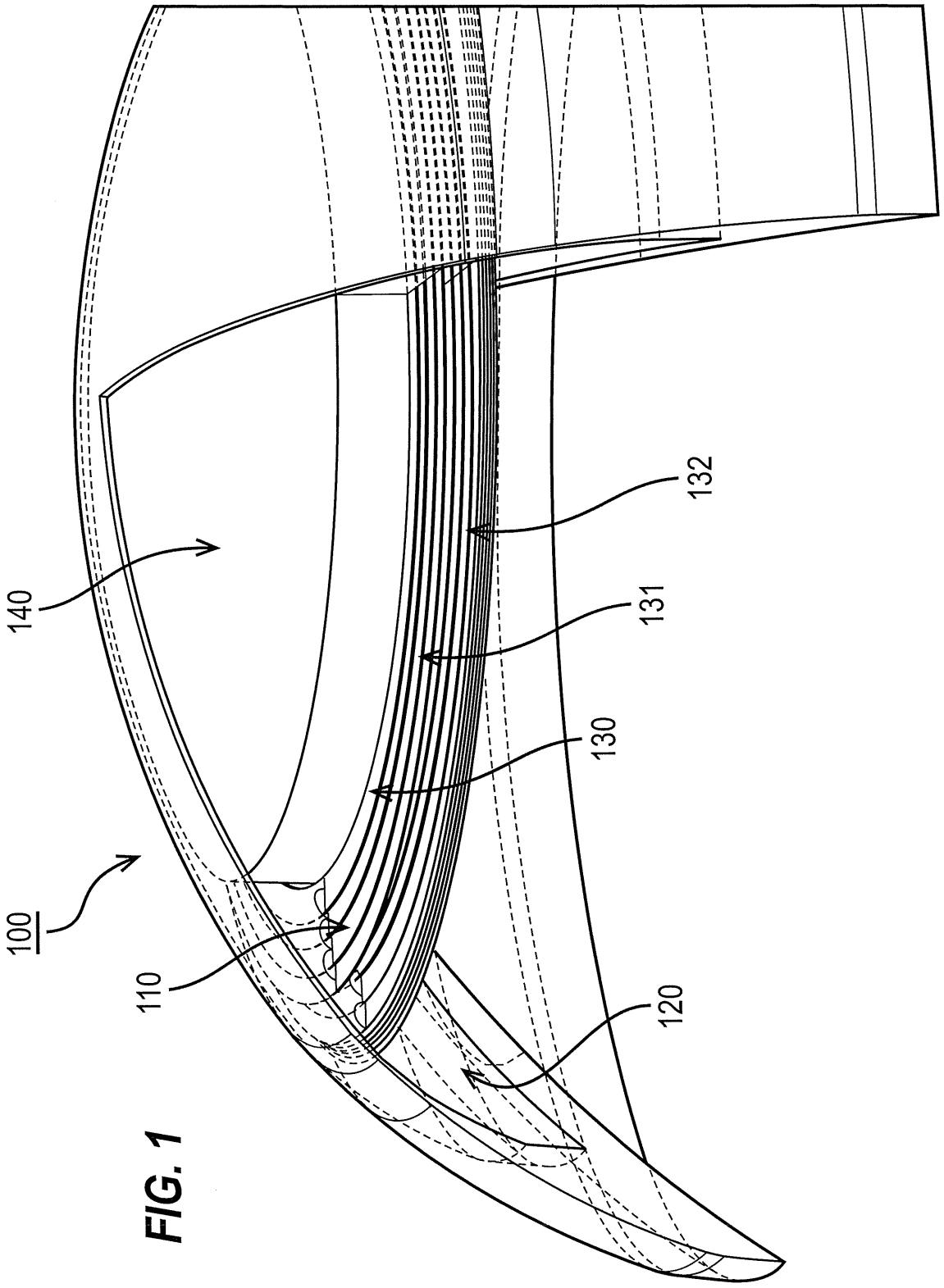


FIG. 1

FIG. 2

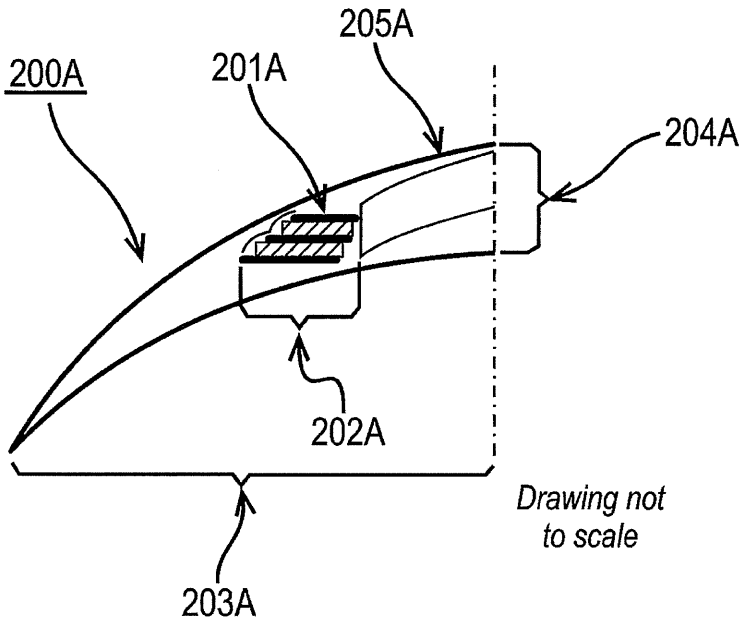
205A
200A
201A
204A
202A
Drawing not
to scale
203A

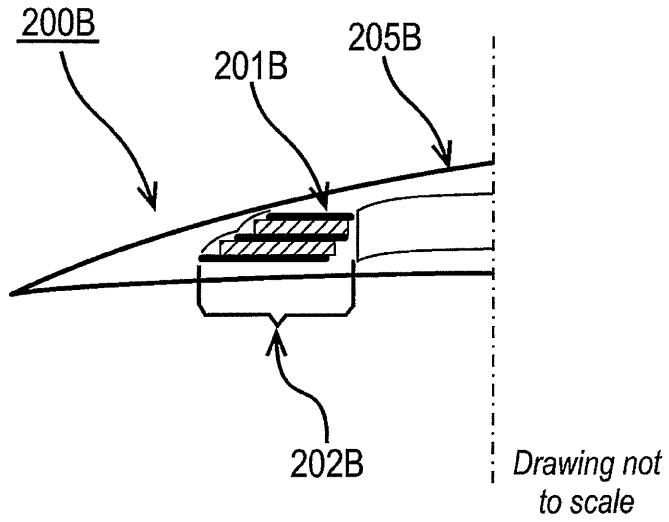
200B
205B
201B
202B
Drawing not
to scale

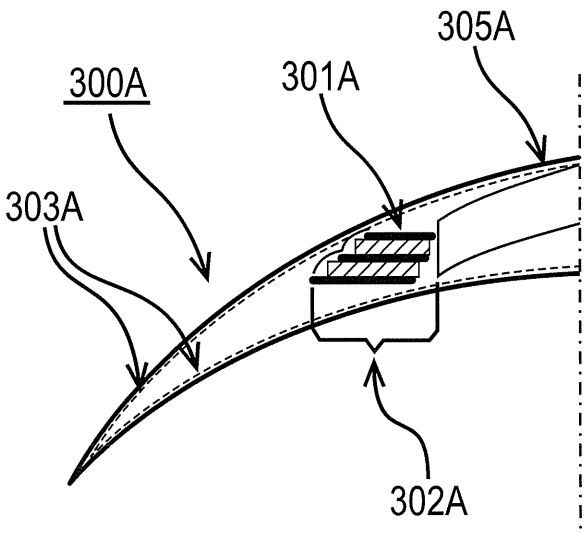


Drawing not to scale

FIG. 3

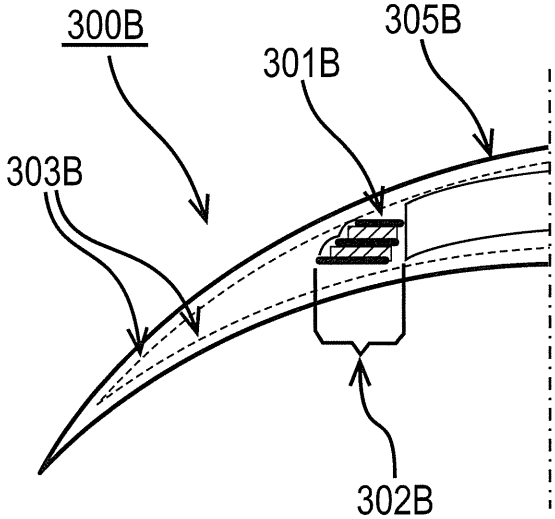


Drawing not to scale

FIG. 4

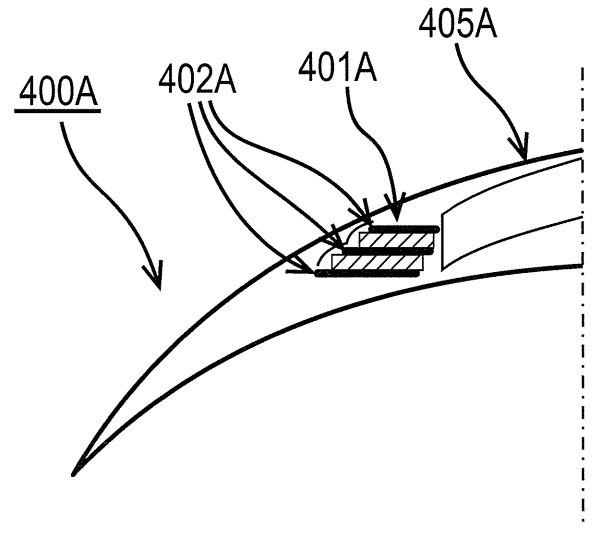


Drawing not to scale

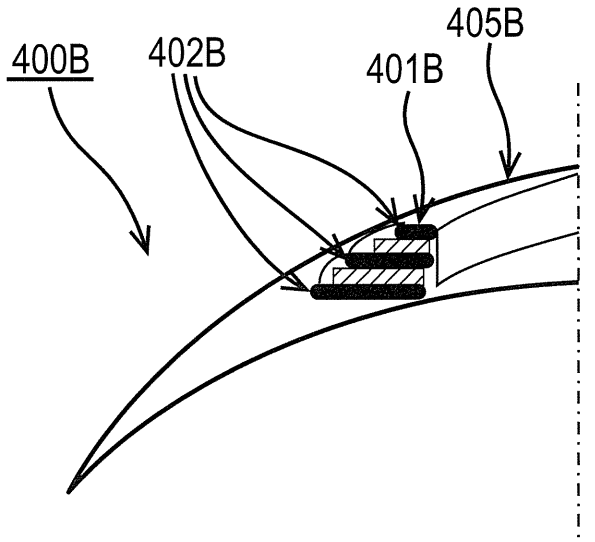


Drawing not to scale

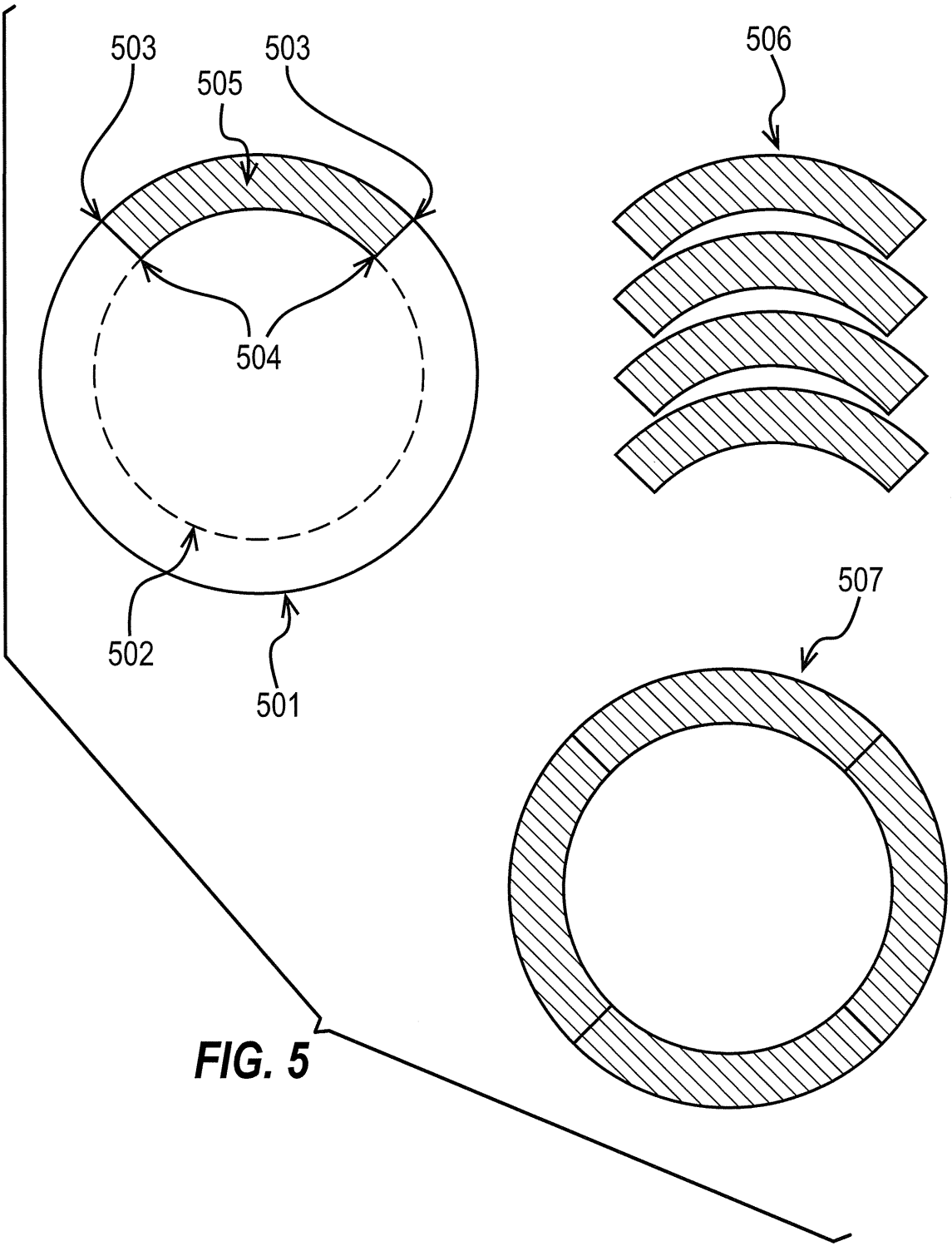


FIG. 5

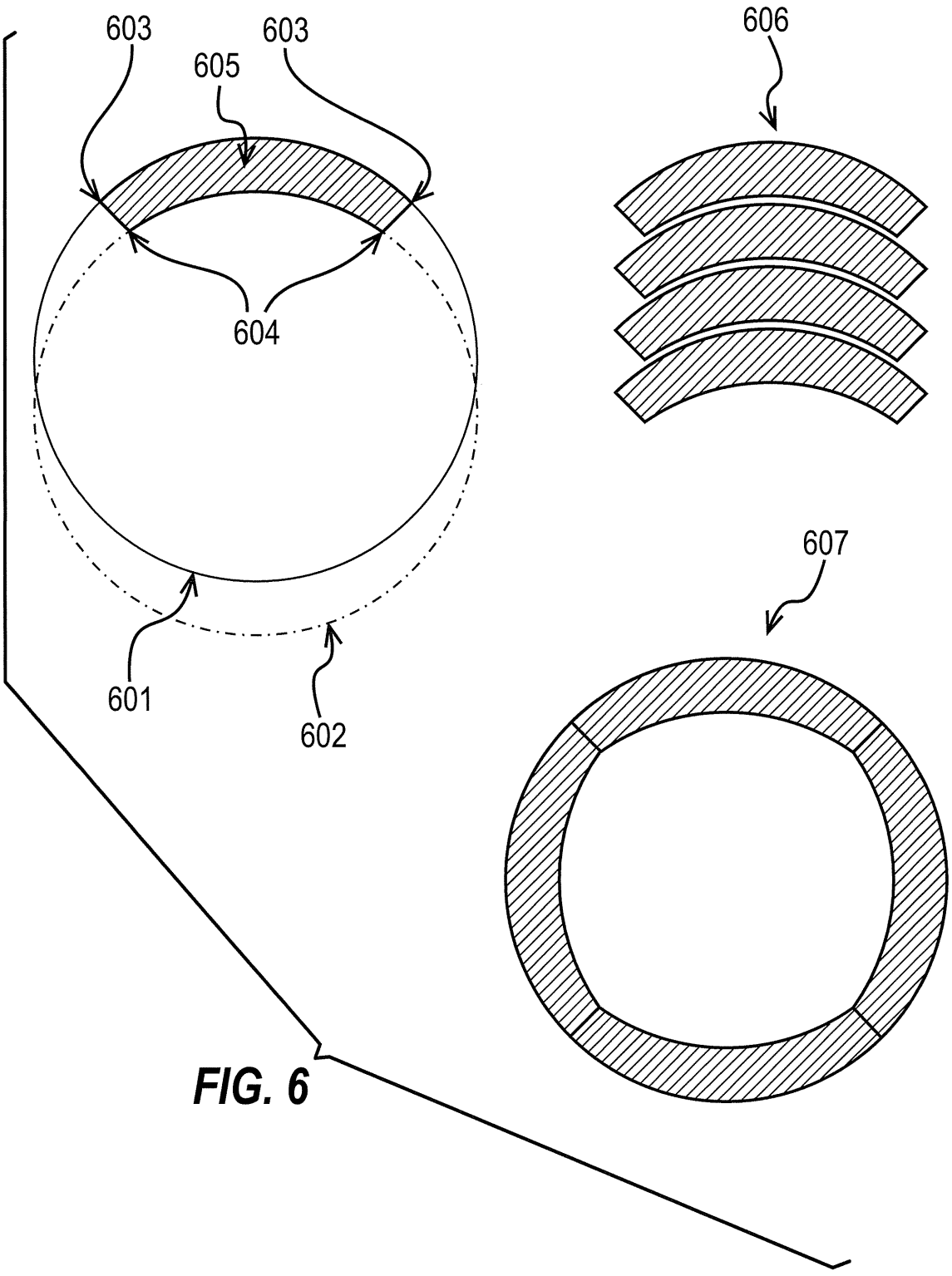


FIG. 6

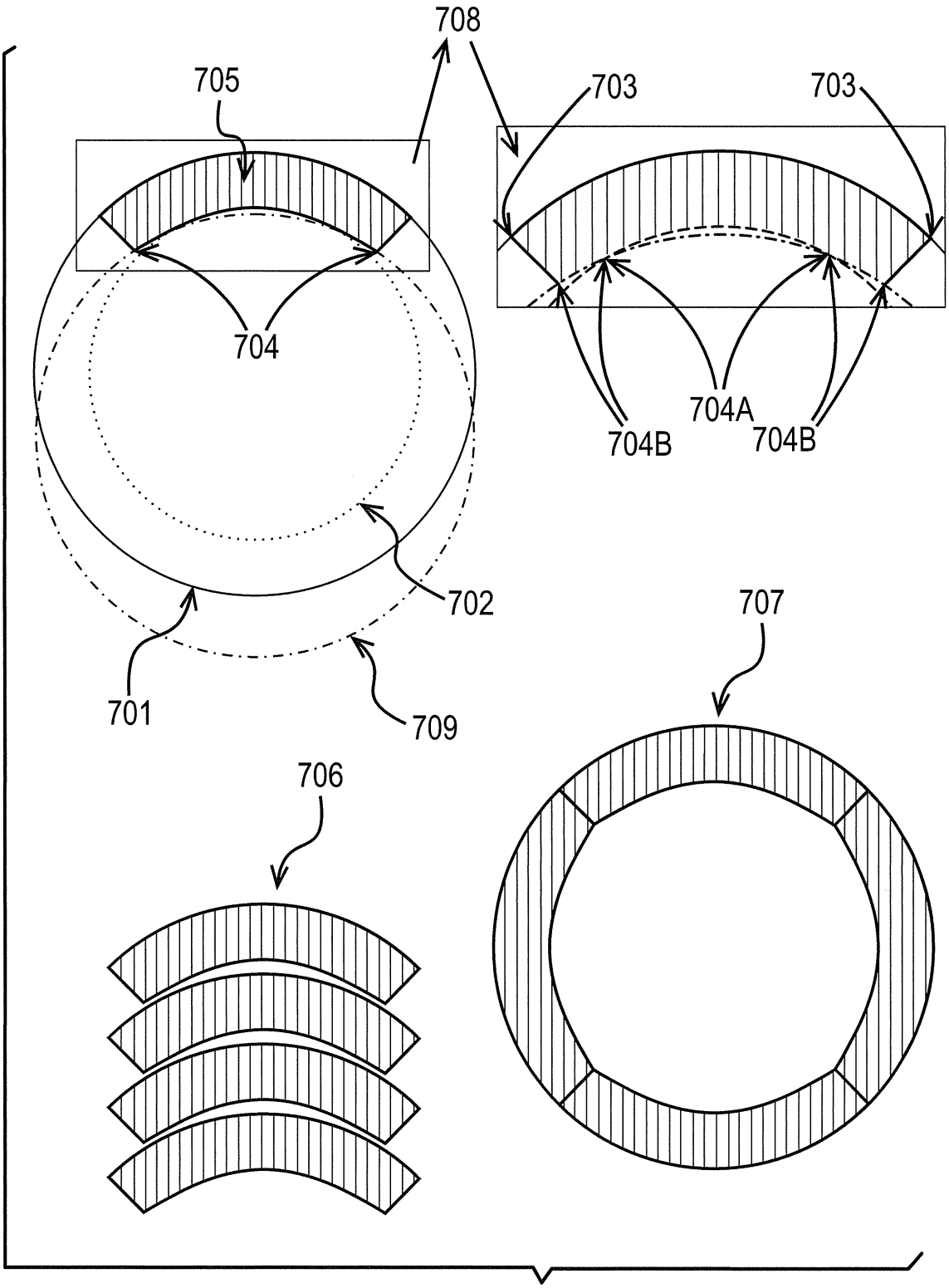


FIG. 7

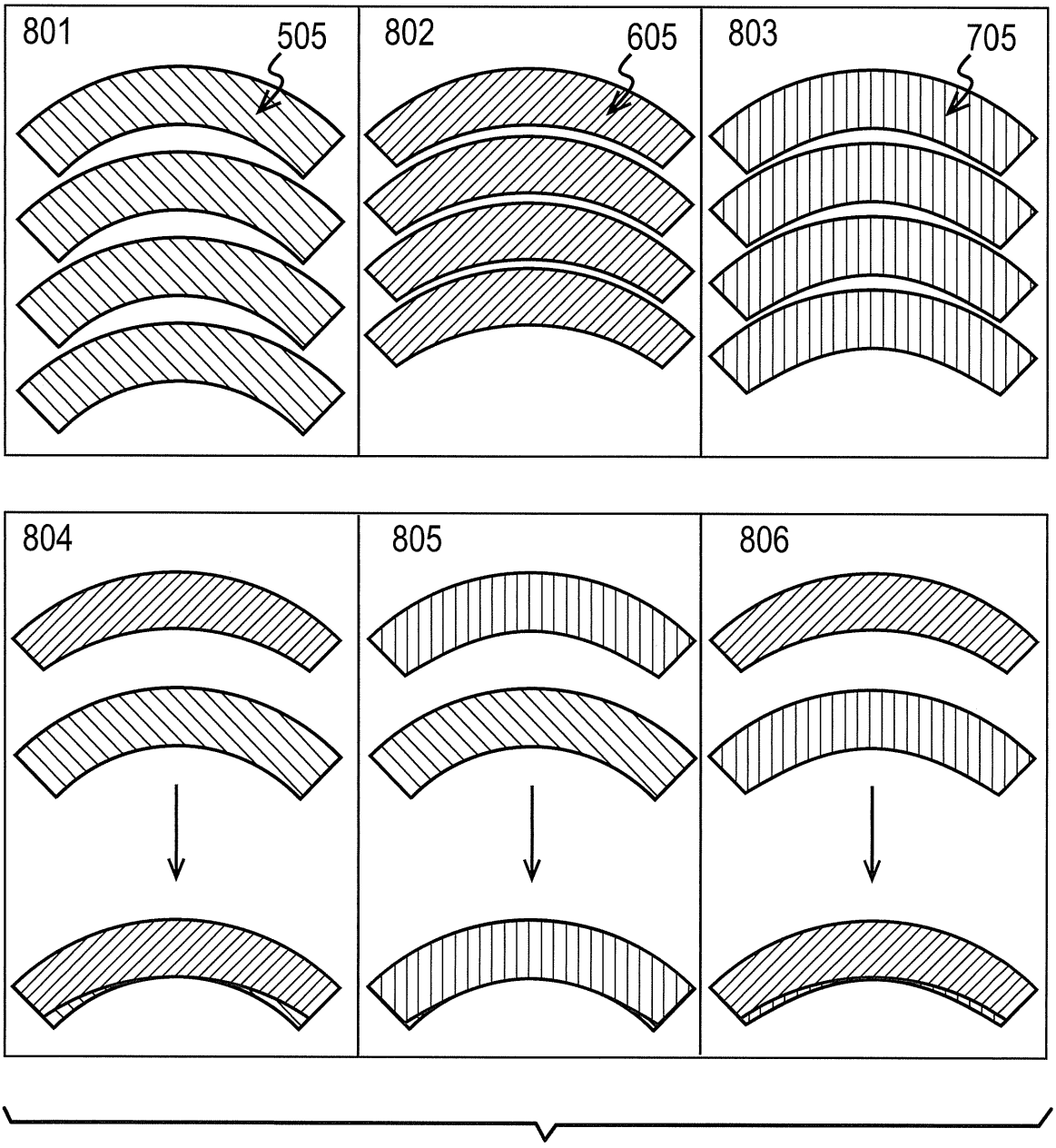


FIG. 8