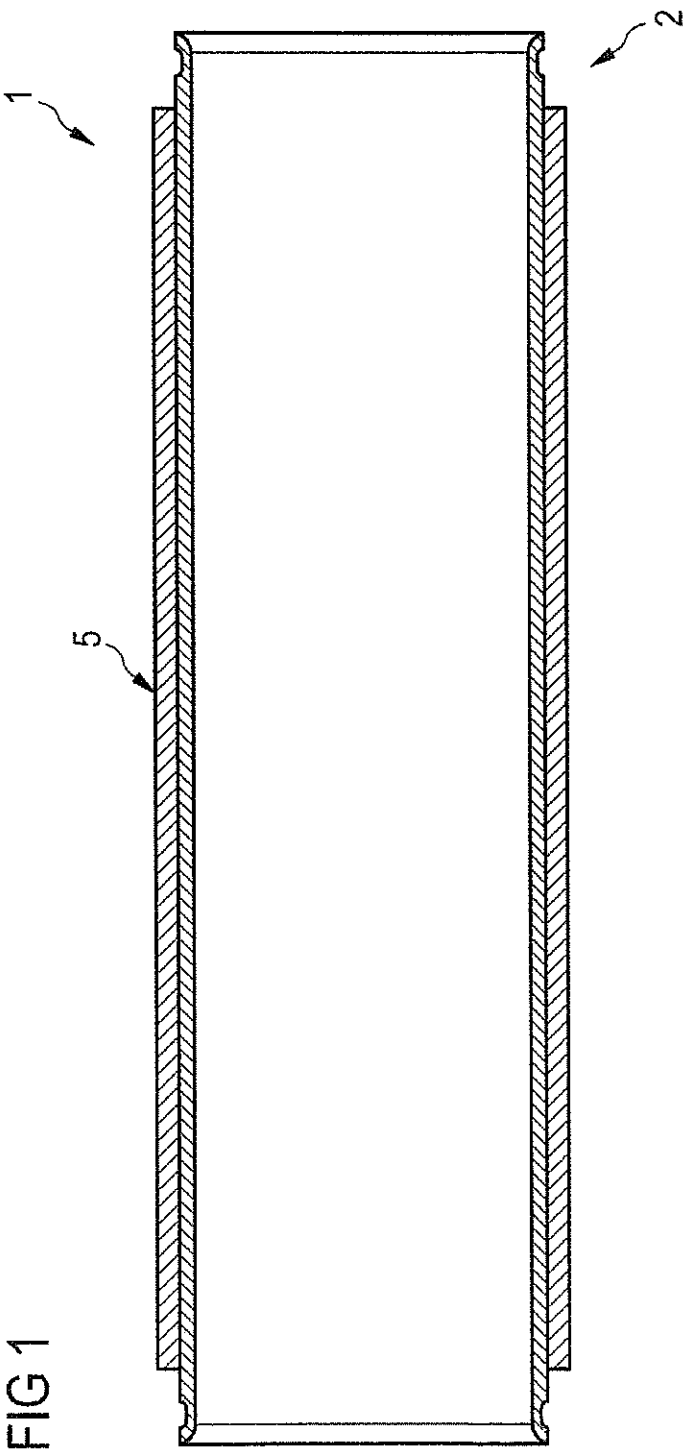


FIG 1

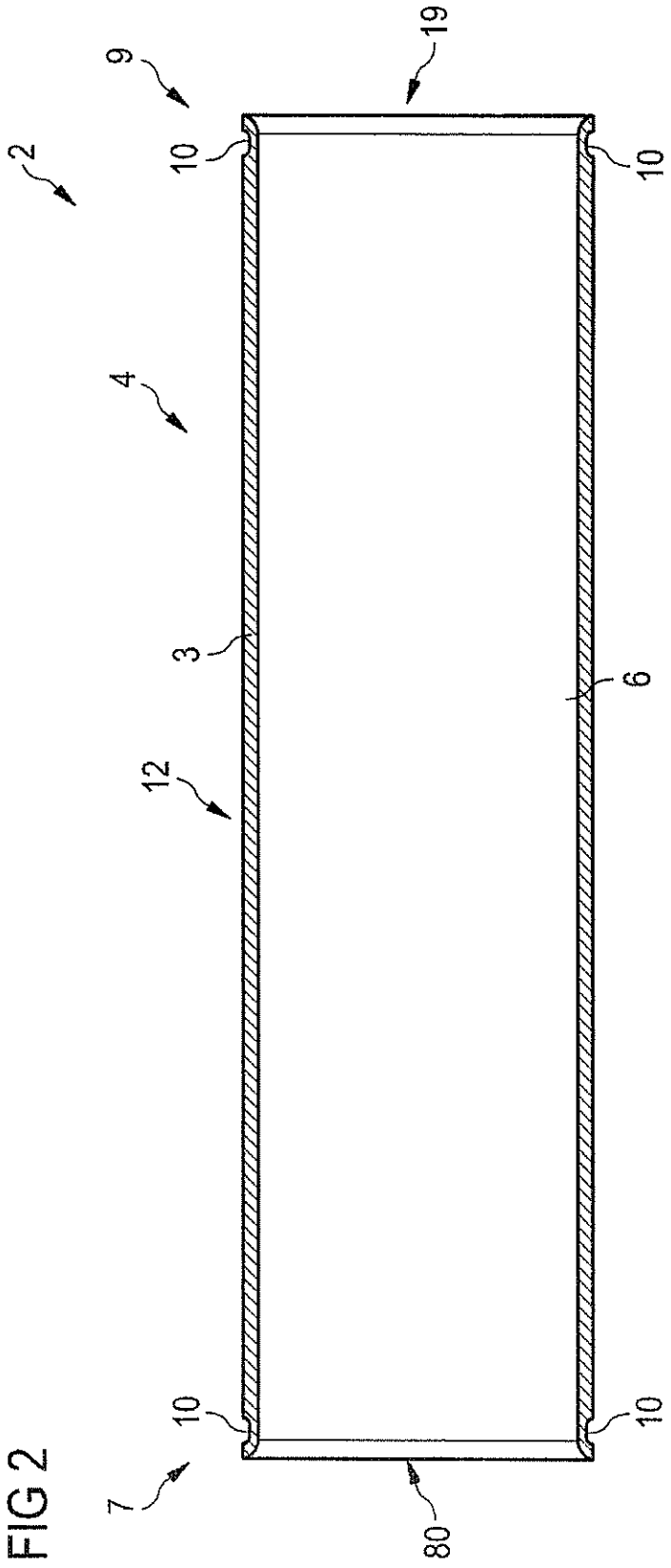


FIG 2

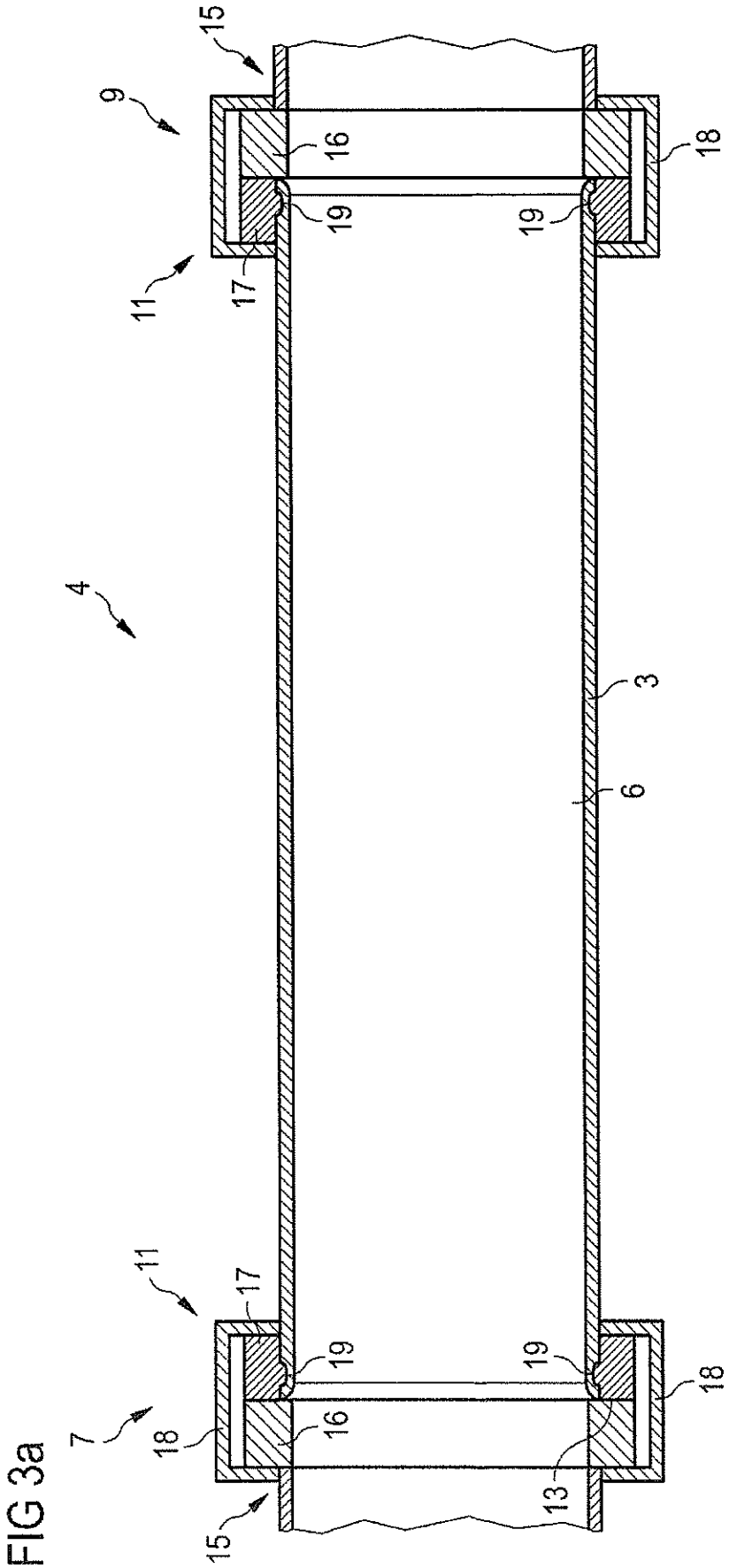


FIG 3a

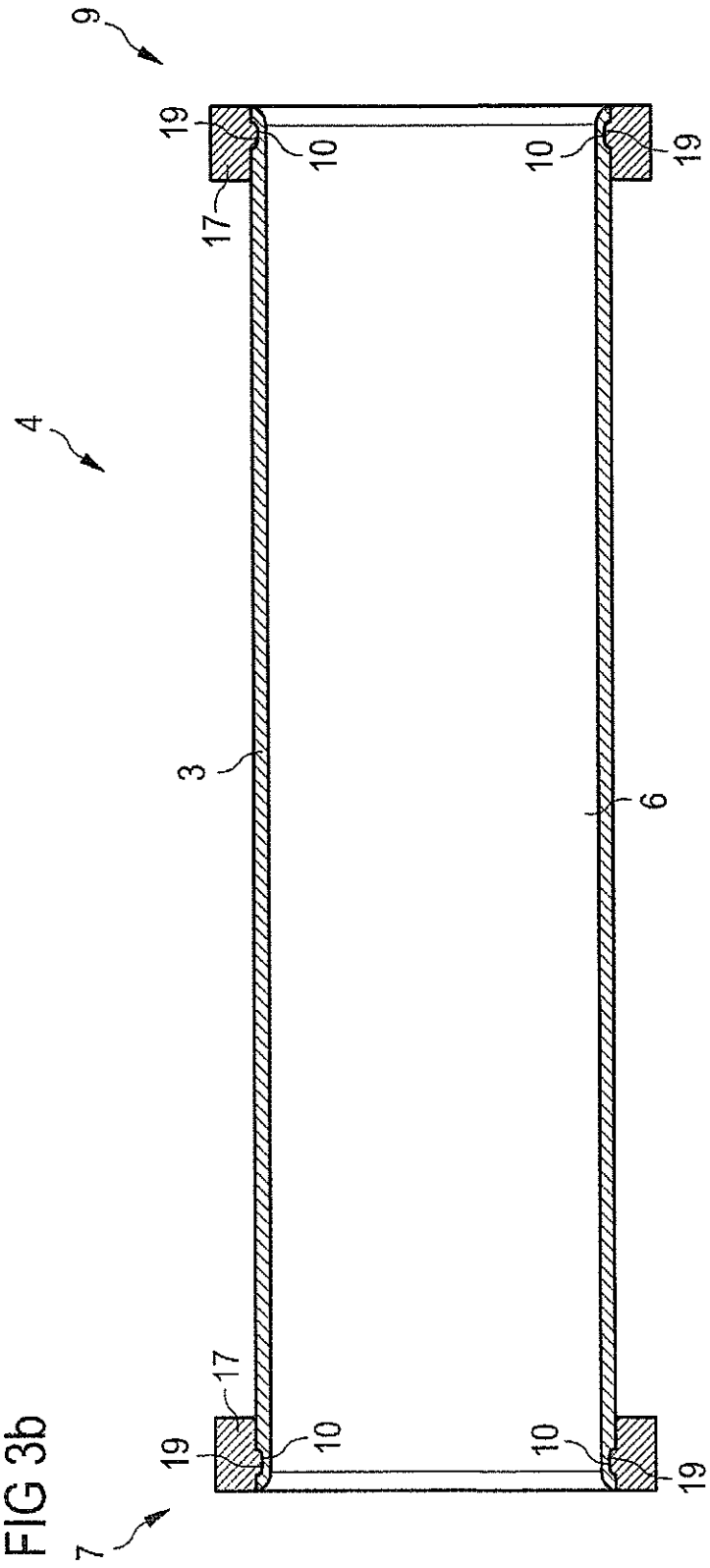


FIG 3b

FIG 3c

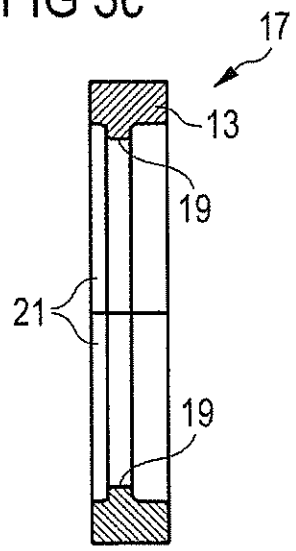


FIG 3d

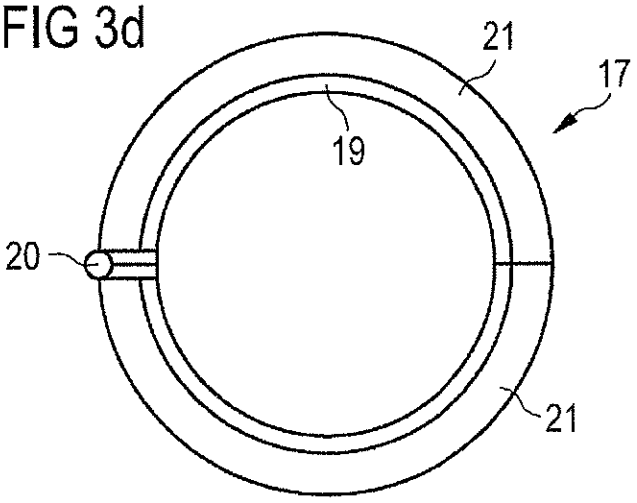


FIG 3e

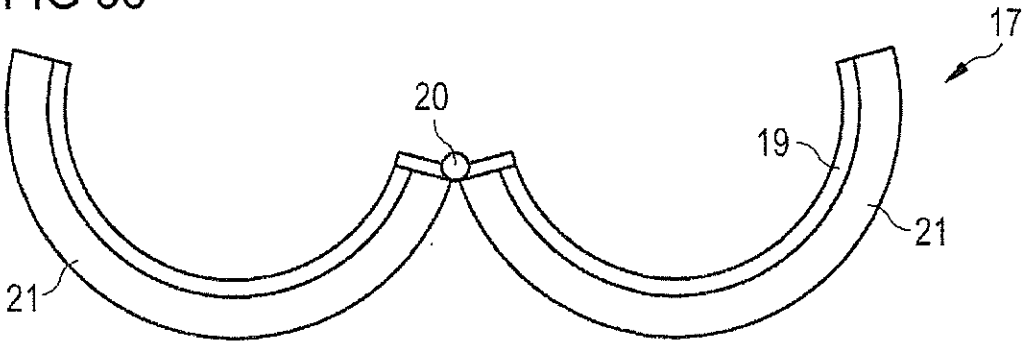

FIG 3f

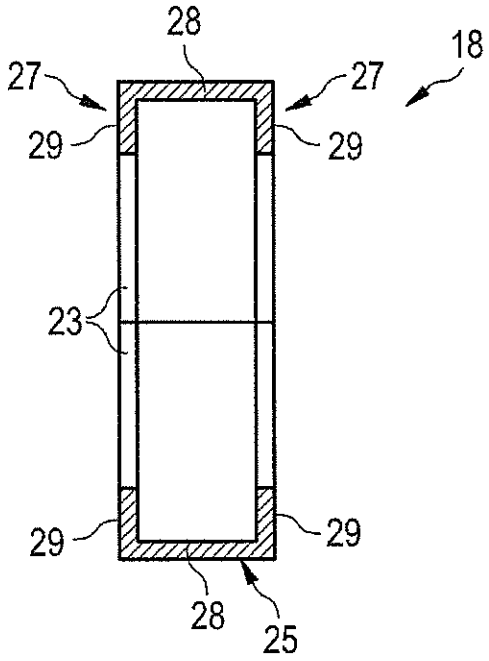


FIG 3g

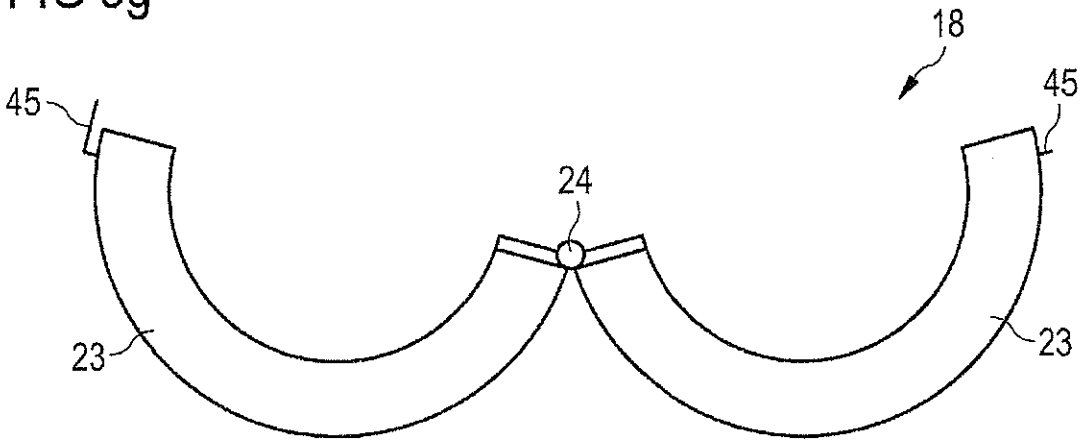

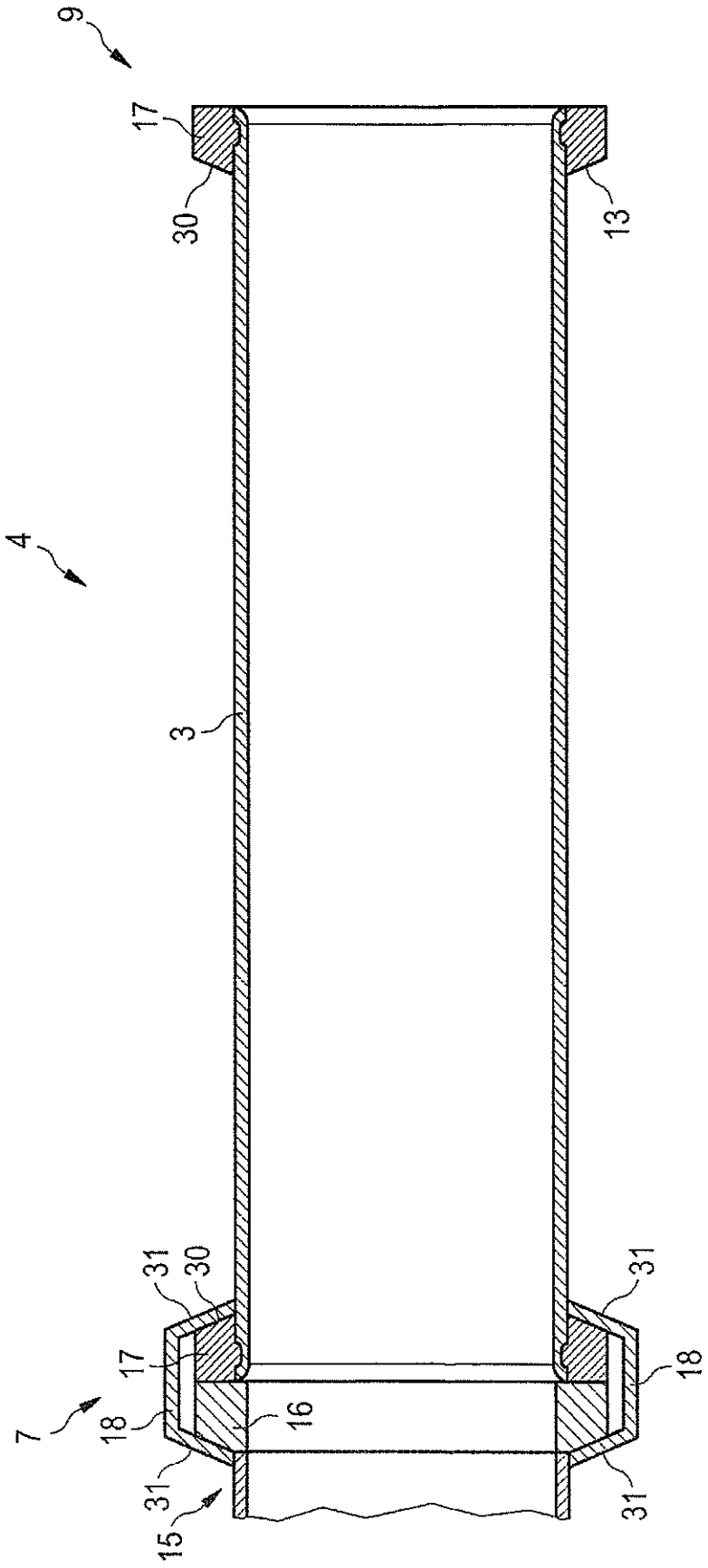


FIG 4

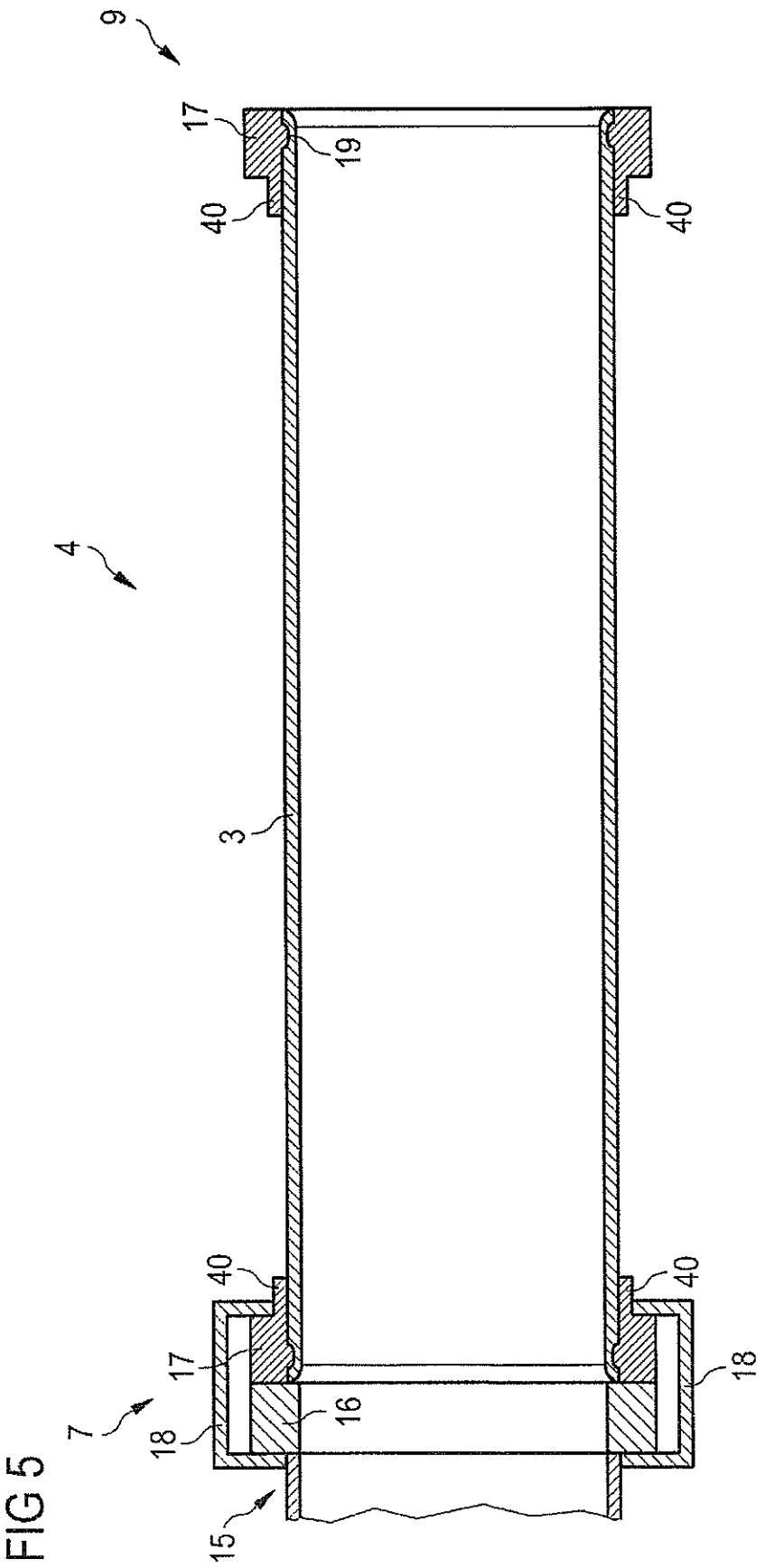


FIG 5

FIG 6a

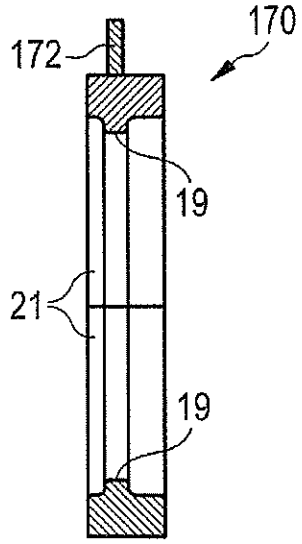


FIG 6b

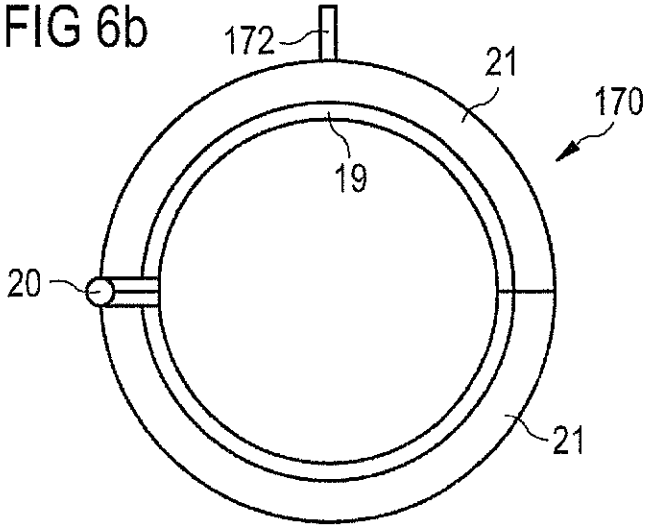


FIG 6c

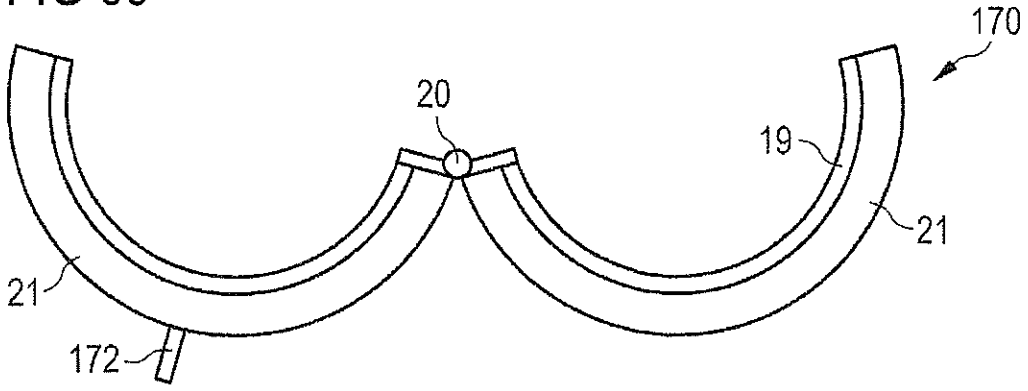

FIG 6d

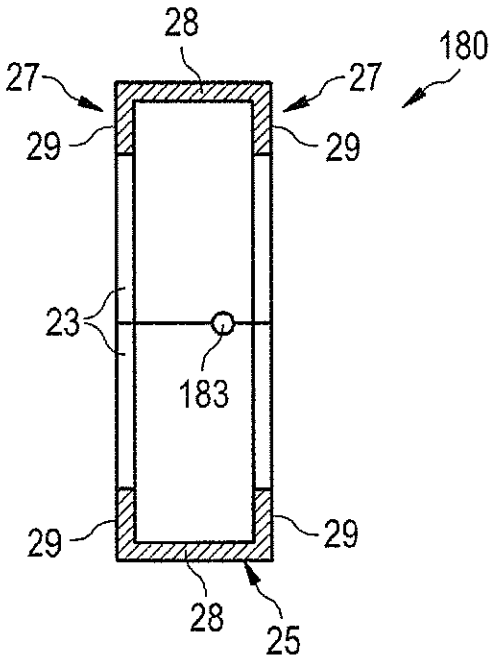
28
180
27
27
29
29
23
183
29
29
28
25

FIG 6e

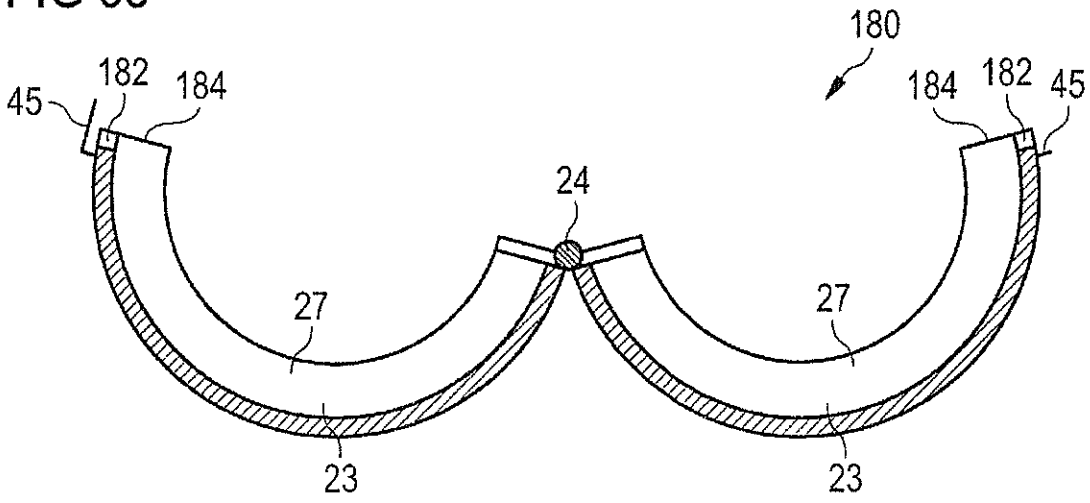
180
45
182
184
184
182
45
24
27
27
23
23

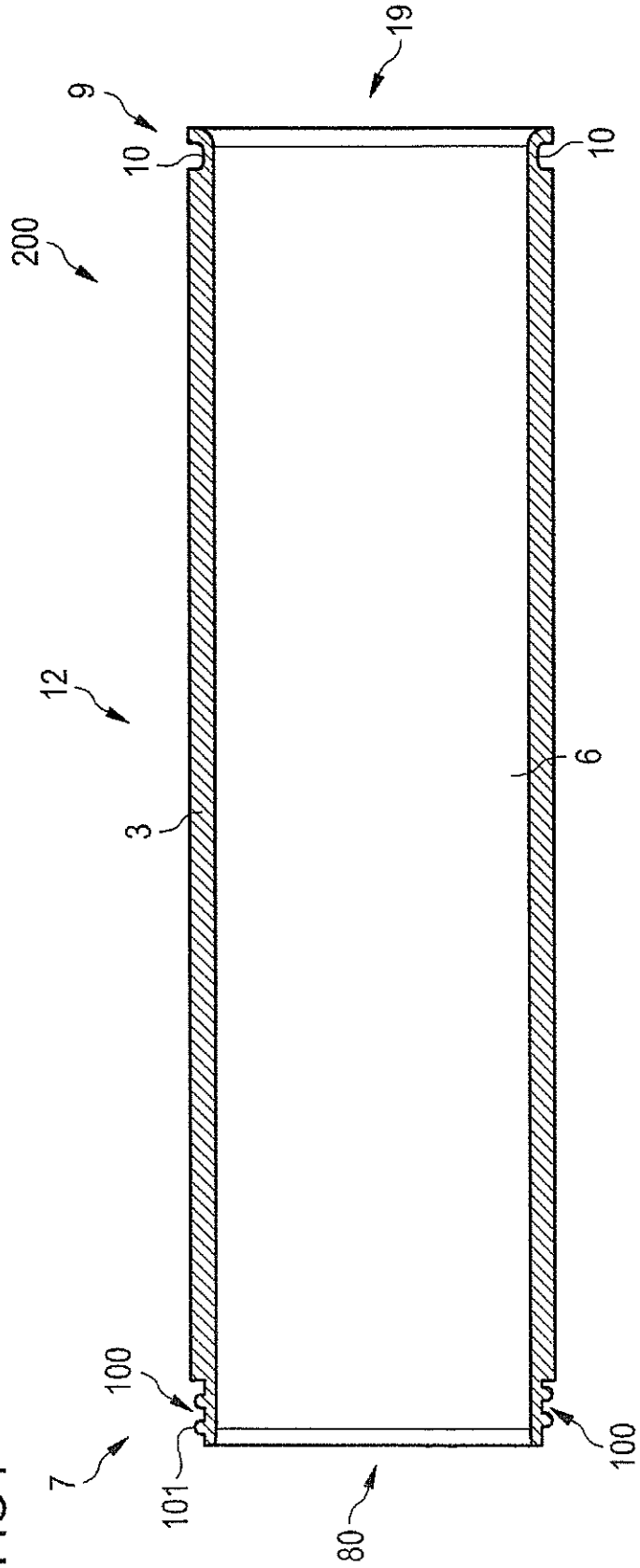


FIG 7

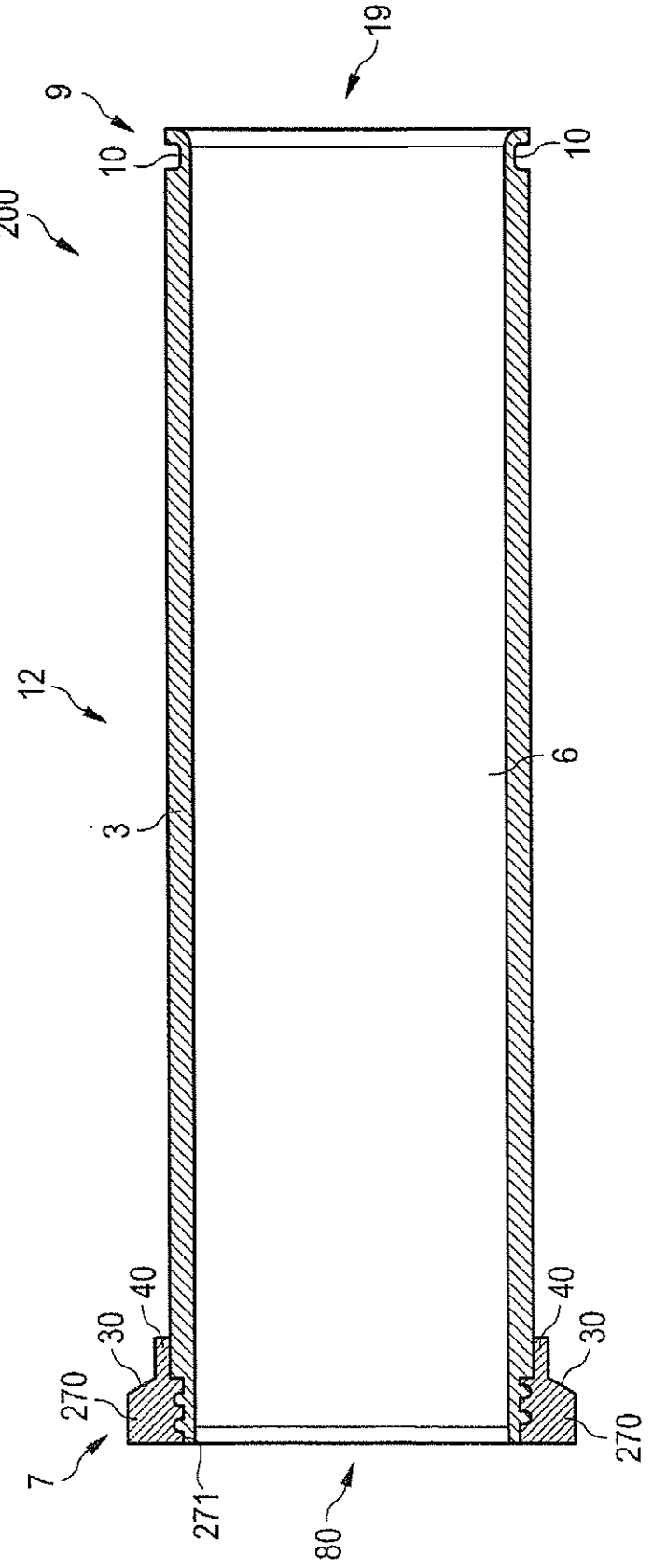


FIG 8a

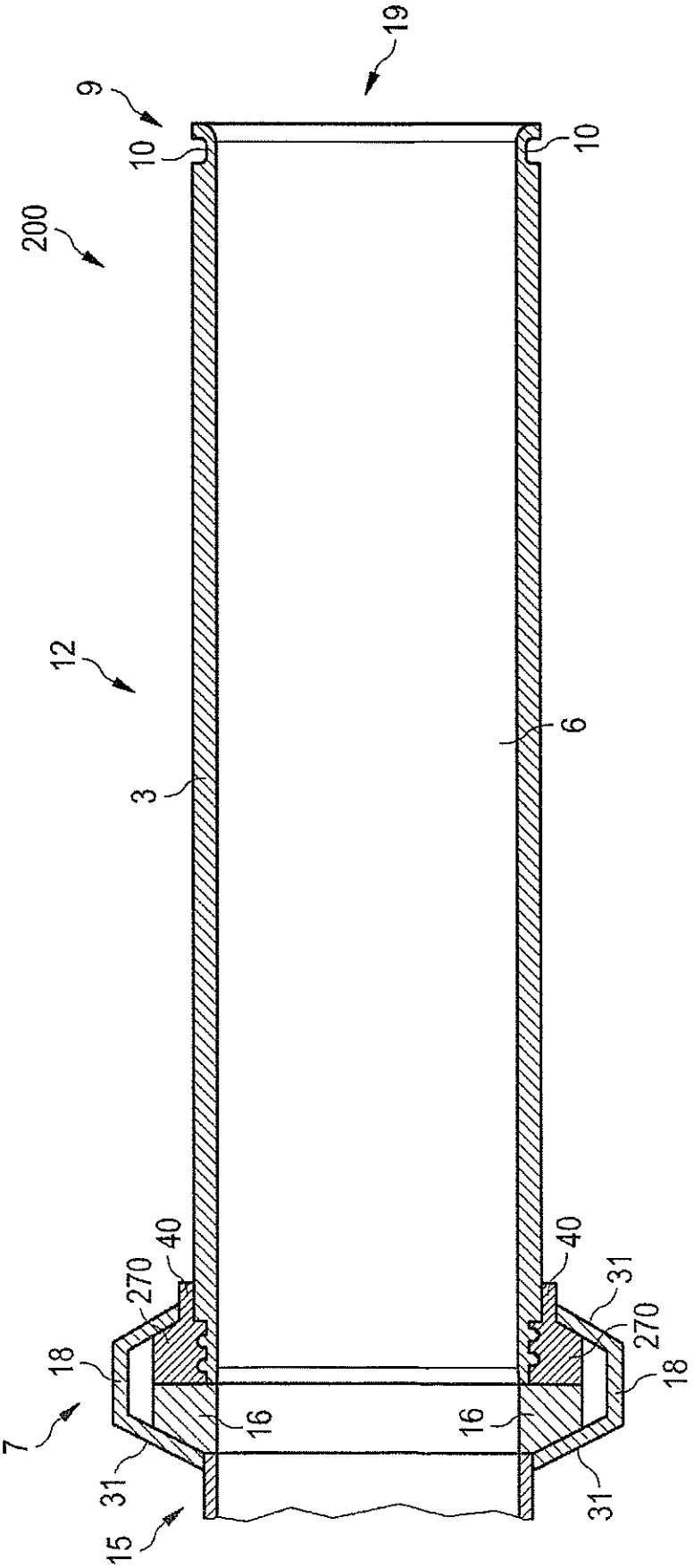


FIG 8b

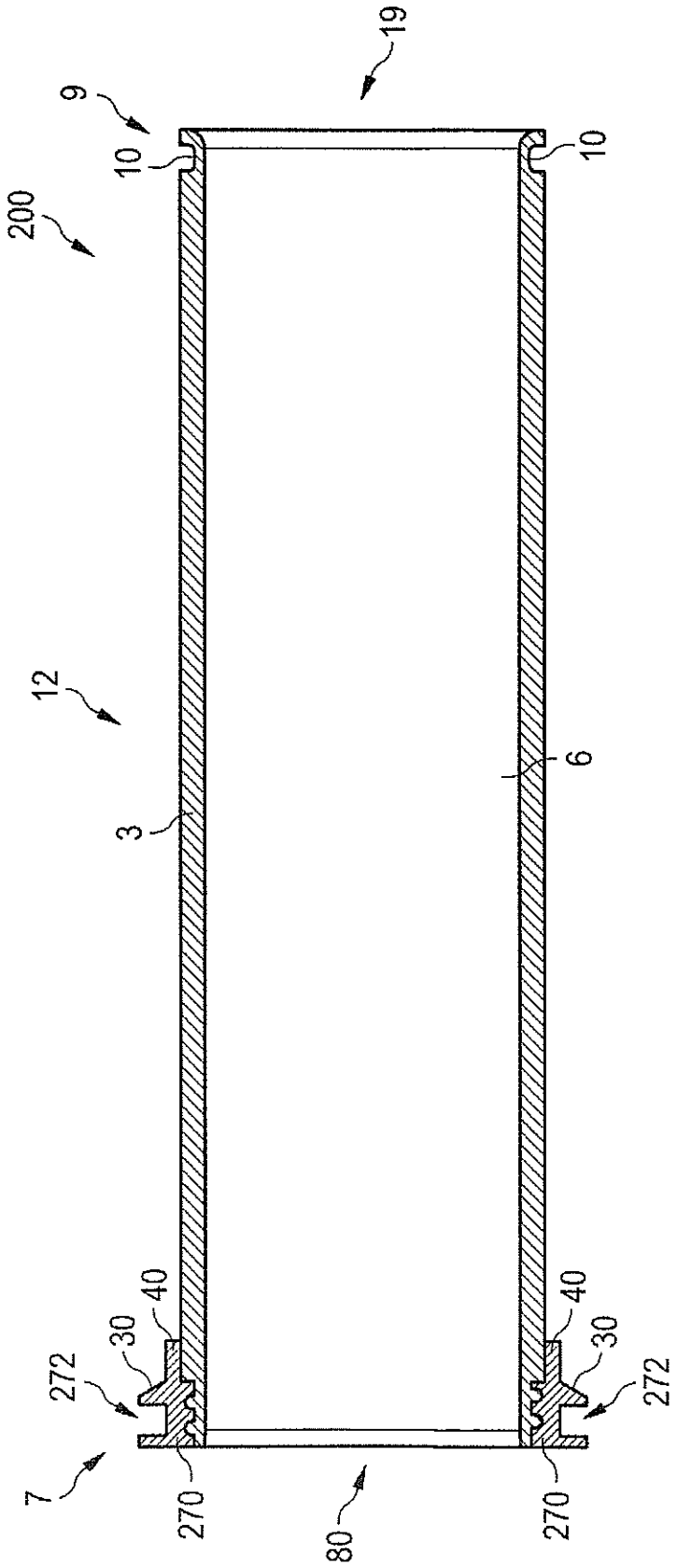


FIG 8c

FIG 9

